Namwoo Kang[1]
Assistant Professor
Mem. ASME
K-School,
Korea Advanced Institute of Science and Technology (KAIST),
Daejeon 34141, South Korea
e-mail: nwkang@kaist.ac.kr

Fred M. Feinberg
Professor
Ross School of Business,
Department of Statistics,
University of Michigan,
Ann Arbor, MI 48109
e-mail: feinf@umich.edu

Panos Y. Papalambros
Professor
Fellow ASME
Optimal Design Laboratory,
Department of Mechanical Engineering,
University of Michigan,
Ann Arbor, MI 48109
e-mail: pyp@umich.edu

Autonomous Electric Vehicle Sharing System Design

Car sharing services promise "green" transportation systems. Two vehicle technologies offer marketable, sustainable sharing: autonomous vehicles (AVs) eliminate customer requirements for car pick-up and return, and battery electric vehicles entail zero emissions. Designing an autonomous electric vehicle (AEV) fleet must account for the relationships among fleet operations, charging station (CS) operations, electric powertrain performance, and consumer demand. This paper presents a system design optimization framework integrating four subsystem problems: fleet size and assignment schedule; number and locations of charging stations; vehicle powertrain requirements; and service fees. We also compare an AEV service and autonomous vehicle (AV) service with gasoline engines. A case study for an autonomous fleet operating in Ann Arbor, MI, is used to examine AEV and AV sharing systems profitability and feasibility for a variety of market scenarios. The results provide practical insights for service system decision makers.
[DOI: 10.1115/1.4034471]

1 Introduction

Car sharing services offer a sustainable transportation alternative with the potential to reduce emissions, congestion, parking demand, and rider cost, while increasing user mobility and convenience [1]. The car sharing market in the U.S. had an annual 38% membership increase in 2013 [2]. A typical service like Zipcar [3] uses five steps for a two-way trip service: become a member, reserve a car, pick it up at a designated place, use it, and return it to the original pick-up location. While two-way trip service requires customers to return a car to the original location, one-way trip service (such as Ref. [4]) allows customers to drop off a car at another location near the destination, but still use only designated places for pick-up and return.

Autonomous vehicles (AVs) are expected to spark a revolution in transportation systems over the next several decades, offering a safe and low-stress transportation solution for customers [5]. An example is the recent news of General Motors cooperating with Lyft, the ride-sharing service company, for an autonomous driving taxi service [6].

The present study claims that autonomous electric vehicle (AEV) sharing, which integrates autonomous and electric vehicle technologies, can result in a more sustainable and marketable car sharing service than traditional ones such as Zipcar and car2go. We also focus on addressing the following question: "Are AEV sharing services feasible and more profitable compared to typical AV sharing services?" In the following, AV refers to autonomous gasoline vehicles.

An AEV service as defined in this study follows five steps: a customer (i) becomes a member; (ii) enters location using a smart phone app and receives a wait time for a car; (iii) has car arrive in full-autonomous driving mode; (iv) drives car with no autonomous driving mode; and (v) leaves car at the destination. The car then travels to the next customer (in full-autonomous driving mode).

The chief benefit of this sharing service to customers is helping to avoid the hassle of pick-ups and returns. From a customer's perspective, the AEV sharing service is the intersection of traditional car sharing services and call taxi (like Ref. [7]) services, integrating the benefits of each.

From a service provider's perspective, the challenge is that the AEV sharing service requires an optimal fleet assignment strategy to match AEVs with customers, while minimizing wait time of consumers and accounting for the AEV's charging schedule. For example, once a customer requests a ride, the optimal AEV should be selected among the whole fleet (i.e., among idle cars, in-service cars, and in-charging cars); after the trip, the AEV goes to either a charging station (CS) or to the next customer, or waits for the next trip at its current location. This fleet assignment process is depicted in Fig. 1. Besides fleet assignment, a service provider must also decide the number of AEVs needed, the service fee, and the number and location of charging stations. For AEVs specifically designed for this service, vehicle design variables must be also included.

Previous studies have modeled fleet assignment and cost for AV-sharing services [8,9] to calculate wait time, trip miles, fleet usage, and operating cost, given fleet size and trip request data (i.e., request times, origins, and destinations of customers). While most studies for autonomous sharing service have focused on gasoline vehicles, recent studies indicate that using electric vehicles can lead to more eco-friendly service and reduce customers' range anxiety and charging time management [10–12]. If an AEV fleet is used for a sharing service, a service provider should consider battery charging schedules based on vehicle driving range, charging time, and charging station locations, because charging schedules affect the wait time of consumers and the wrong charging schedule can cause the vehicle to run out of battery power.

Consumer demand prediction models (trip requests) are rare; data-driven [10] and analytical [13] demand models have been recently proposed. Trip requests prediction is among the most important inputs of the fleet assignment simulation model and can be estimated via a consumer preference model with respect to wait time, service fee, etc. Finally, previous studies did examine neither marketability (profitability) of such services, nor how different market scenarios may affect system decisions.

Predicting car sharing demand is challenging because vehicle availability (more available vehicles and less wait time) and number of trips (demand) influence each other [14]. Here, we integrate marketing (calculate demand based on wait time) and operations

[1]Corresponding author. Most of the work was done when the author was in the University of Michigan as a research fellow.

Contributed by the Design Automation Committee of ASME for publication in the Journal of Mechanical Design. Manuscript received March 26, 2016; final manuscript received August 11, 2016; published online October 11, 2016. Assoc. Editor: Christopher Mattson.

 Copyright © 2017 by ASME

Downloaded From: http://mechanicaldesign.asmedigitalcollection.asme.org/ on 10/19/2016 Terms of Use: http://www.asme.org/about-asme/terms-of-use

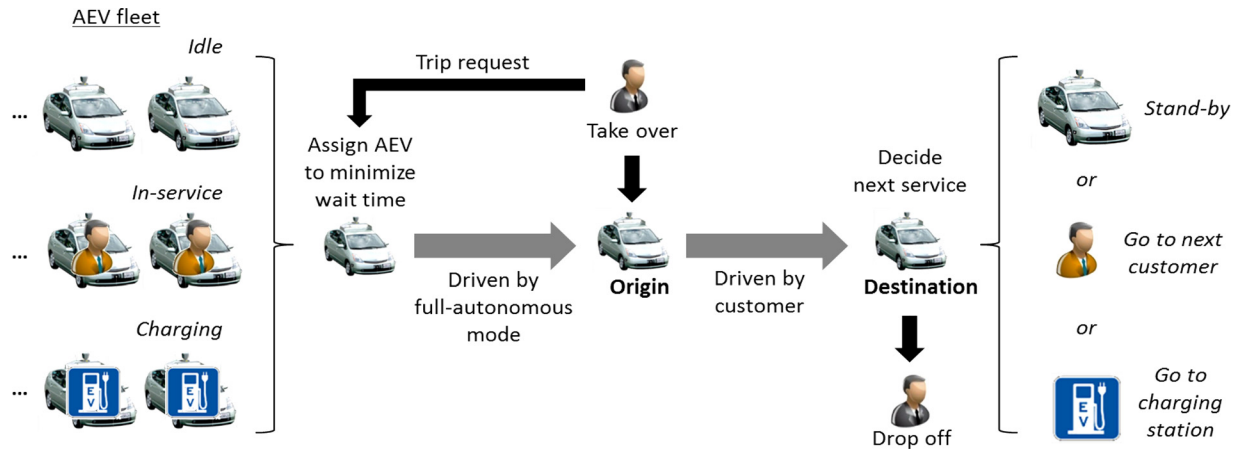

Fig. 1 AEV-sharing system operation

(calculate wait time based on demand) models to estimate demand iteratively. In a previous study, Kang et al. [15] focused on charging station services along with EV products estimating the charging service demand using predetermined service attributes and ignoring the fact that station capacity and EVs demand are interdependent. The current paper removes this limitation and accounts for the relationship between service demand and service operating capacity in predicting demand.

Design for market systems (DMSs) addresses design decisions at the enterprise level adopting a profit maximization objective rather than a functional performance criterion. This necessitates creating customer preference models that link product demand with price but also with product attributes explicitly, see e.g., Refs. [16–20]. The basic DMS optimization model maximizes the producer's expected profit with respect to price and product design variables, subject to engineering, enterprise, and regulatory constraints. The model must include the functional relationships between the design attributes that customers use to make choices and the design variables that the designers can manipulate to create the optimized design. Thus, a DMS framework allows integration of marketing, engineering, manufacturing, operations, and policy considerations. This framework fits well the AEV sharing system design problem and is adopted here, integrating four subsystem models (fleet assignment, charging station location, AEV design, and service demand) to make system-level decisions. Analysis models quantifying the relationship between EV design and charging station design (Refs. [15] and [21]) are incorporated in the optimization.

The remainder of the paper is organized as follows. Section 2 introduces the AEV-sharing system design optimization framework and associated models. Section 3 presents optimization results for a study implementing such a service in Ann Arbor, MI. Section 4 summarizes conclusions and limitations.

2 System Design Framework

The design framework consists of four subsystem models and integrates them to a system-level profit-optimization problem as shown in Fig. 2. The subsystem models are fleet assignment (operations 1), charging station location (operations 2), AEV design (engineering), and service demand (marketing). Red-highlighted variables (i.e., service fees, fleet size, number of CSs, and vehicle design) indicate system-level decision variables. Other variables are linking responses of each model as summarized in Table 1.

The system-level objective is to maximize operating profit where: operating profit = operating revenue − operating cost = (revenue from memberships + revenue from actual usage of the

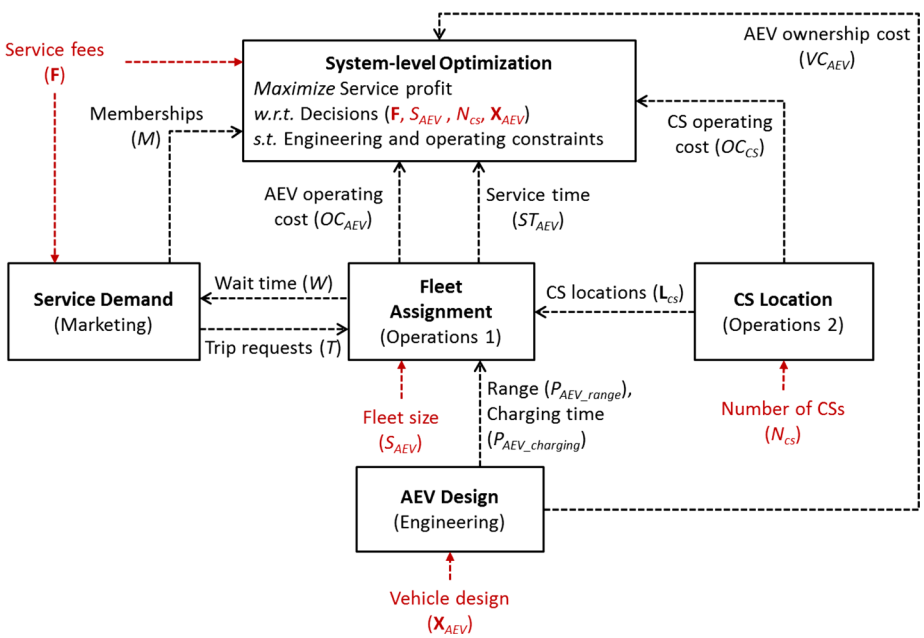

Fig. 2 System design framework

Downloaded From: http://mechanicaldesign.asmedigitalcollection.asme.org/ on 10/19/2016 Terms of Use: http://www.asme.org/about-asme/terms-of-use

Table 1 Objectives and variables of models

Model	System-level optimization	Fleet assignment (operations 1)	Charging station (CS) location (operations 2)	AEV design (engineering)	Service demand (marketing)
Modeling purpose	Integration of subsystems	Optimal AEV assignment and charging scheduling	Optimal CS locating	City-driving simulation and feasibility check	Predict service demand
Objective	Maximize operating profit	Minimize wait time	Minimize distance between AEVs and CSs	—	—
System-level decisions	All system-level decision	AEV fleet size	Number of CSs	AEV design (battery design, motor design, and gear ratio)	Service fees (membership fee and driving rate)
Local decisions	—	Fleet assignment and charging schedules	CS locations	—	—
Linking responses to other models		Wait time (to marketing), service time (to system-level optimization), AEV fleet operating cost (to system-level optimization)	CS locations (to operations 1), CS operating cost (to system-level optimization)	Range (to operations 1), Charging time (to operations 1), AEV ownership cost (to system-level optimization)	Number of trip requests (to operations 1), Number of memberships (to system-level optimization)

system) − (fleet operating cost + charging station operating cost + fleet ownership cost).

The decision variables for system-level optimization are AEV fleet size, number of charging stations, electric powertrain design, membership fee, and driving rate. The fleet assignment subsystem determines the optimal AEV assignment and charging schedules; and the charging station location subsystem determines the optimal charging station locations.

Bound constraints for all decision variables are imposed and tracked for possible activity at the optimum. Engineering requirements on the AEV performance are placed as inequality constraints for service feasibility (see Sec. 2.3).

Model parameters are selected to match the City of Ann Arbor, MI. Further details on the individual models are provided in Secs. 2.1–2.4. Throughout the ensuing analysis, we assume that the AEV-sharing service operator owns the charging stations and the AEV fleet so that all decisions are made simultaneously. This single owner case can be extended to a cooperation case with multiple stakeholders as shown in Ref. [21].

The system-level optimization problem is stated as follows:

$$\max_{\bar{\mathbf{x}}} \ \Pi = (F_M \times M + F_R \times \mathrm{ST}_{\mathrm{AEV}}) \ -(VC_{\mathrm{AEV}} + \mathrm{OC}_{\mathrm{AEV}} + \mathrm{OC}_{\mathrm{CS}}) \tag{1}$$

with respect to

$$\bar{\mathbf{x}} = [\mathbf{F}, S_{\mathrm{AEV}}, N_{\mathrm{CS}}, \mathbf{X}_{\mathrm{AEV}}] \tag{2}$$

subject to

$$lb \leq \bar{\mathbf{x}} \leq ub \tag{3}$$

$$\mathbf{g}_{\mathrm{AEV}}(\mathbf{P}_{\mathrm{AEV}}) \leq 0 \tag{4}$$

where

$$\mathbf{F} = [F_M, F_R] \tag{5}$$

$$\mathbf{X}_{\mathrm{AEV}} = [\mathbf{B}_{\mathrm{AEV}}, \mathbf{M}_{\mathrm{AEV}}, G_{\mathrm{AEV}}] \tag{6}$$

$$\mathbf{P}_{\mathrm{AEV}} = [P_{\mathrm{AEV}_{\mathrm{range}}}, P_{\mathrm{AEV}_{\mathrm{charging}}}, P_{\mathrm{AEV}_{\mathrm{speed}}}, P_{\mathrm{AEV}_{\mathrm{accel}}}] \tag{7}$$

$$[\mathbf{L}_{\mathrm{CS}}, \mathrm{OC}_{\mathrm{CS}}] = f_{\mathrm{CS}}(N_{\mathrm{CS}}) \tag{8}$$

$$[\mathbf{P}_{\mathrm{AEV}}, VC_{\mathrm{AEV}}] = f_{\mathrm{AEV}}(\mathbf{X}_{\mathrm{AEV}}) \tag{9}$$

$$T = f_{\mathrm{demand}}(\mathbf{F}, W) \tag{10}$$

$$[W, \mathrm{ST}_{\mathrm{AEV}}, \mathrm{OC}_{\mathrm{AEV}}] = f_{\mathrm{assign}}(S_{\mathrm{AEV}}, \mathbf{L}_{\mathrm{CS}}, T, P_{\mathrm{AEV}_{\mathrm{range}}}, P_{\mathrm{AEV}_{\mathrm{charging}}}) \tag{11}$$

The system-level objective Eq. (1) is to maximize operating profit Π; Eq. (2) is the system-level decision variables $\bar{\mathbf{x}}$ for the four subsystems; constraints in Eqs. (3) and (4) are bound constraints on the decision variables and inequality constraints $\mathbf{g}_{\mathrm{AEV}}$ on the AEV performances $\mathbf{P}_{\mathrm{AEV}}$, respectively, and detailed information for these constraints is presented in Sec. 2.3; the decision variables are defined in Eqs. (5) and (6); the responses are defined in Eq. (7); and the four subsystem models, f_{CS}, f_{AEV}, f_{demand}, and f_{assign} in Eqs. (8)–(11) indicate the charging station location model, AEV design model, service demand model, and fleet assignment model, respectively.

The present study extends the ideas presented in Ref. [15] placing the service operations model (the fleet assignment) as the centralized model that links the different disciplinary models. That is, all linking responses are delivered and coordinated through the operations model. Most previous DMS approaches for product design use demand models as the coordinator to link the different disciplinary models. In contrast, the DMS for service design presented here uses the service operations as the coordinator at the system level.

2.1 Fleet Assignment Model (Operations 1). The system-level fleet assignment problem links all subsystem problems. Inputs from subsystems are charging station locations from operations model 2 (Sec. 2.2), AEV range and charging time from the engineering model (Sec. 2.3), and trip requests from the marketing model (Sec. 2.4). Outputs are wait time, total service time, and AEV fleet operating cost, which are also used as inputs for other models, see Fig. 2. Every output is an optimal response resulting from solving the local optimization problem to minimize wait time with respect to fleet assignments and charging schedules.

We assume that there is a central information system that gathers all real-time information such as location and state of charge (SOC) of AEVs and queuing status of charging stations, and then directs the AEVs. The central information system will work as follows:

(1) A trip is requested from a customer by the smart phone app. A customer inputs his/her origin and destination.
(2) The system calculates wait times of all deployed AEVs. There are three AEV states: idle AEVs that can come to the customer directly from the current location; in-service AEVs that can come after finishing current service; and in-charging AEVs that can come after finishing charging battery.

Downloaded From: http://mechanicaldesign.asmedigitalcollection.asme.org/ on 10/19/2016 Terms of Use: http://www.asme.org/about-asme/terms-of-use

(3) The system assigns the AEV to minimize wait time subject to feasible SOC, which means the AEV should have enough SOC to go to the nearest charging station without running out of battery after finishing the service.
(4) The assigned AEV goes to the customer in fully autonomous driving mode and the customer drives it by him/herself to the destination and leaves it there.
(5) The AEV records and transmits total service time to the central information system. The customer can check his/her monthly statement and pay driving fees online.
(6) The central information system checks the current SOC of each AEV. If the SOC reaches a lower bound, the system checks queuing time and distance to charging stations, and selects the charging station that makes the vehicle ready for service most quickly. If the vehicle is selected for the next customer, it goes there directly. If it is not selected and has higher SOC than the lower bound, it goes on stand-by at the current location.

To simulate the scenario above, we generated trip request inputs (i.e., time, origin, and destination) using Monte Carlo simulation. For origins and destinations, we generate the set of coordinates on a square of 11×11 miles representing the city of Ann Arbor including area outside the city (see Sec. 2.2). We assume that a customer desires a round-way trip but does not need to hold the AEV at the destination, unlike traditional car sharing services. Instead, the customer requests another AEV when ready to return, like taxi services. For trip request times, we sample times using the distribution of person trips per day from a U.S. government report [22].

Driving distances are approximated by multiplying the Euclidean distance between origin and destination by a factor of $\alpha = 1.4$, to reflect the "taxicab geometry" of typical driving grids; since the greatest possible upscale is $\alpha = \sqrt{2}$ —which would reflect the diagonal of a square with available roads only on a right-angled grid pattern—the proportionality factor of 1.4 represents an upper bound. This approach is the simplest way that has been used in previous research [8]. For future research, we can use Google maps to calculate real driving distance and simulate more accurate service distances. To estimate driving time, we use the average driving velocity 21.2 mph of the FTP-75 driving cycle, representing city driving in the U.S. This driving cycle is also used in the engineering model to simulate vehicle performance, including battery consumptions (see Sec. 2.3).

Given input data (i.e., fleet size, charging station locations, vehicle range, charging time, and trip requests), we set initial vehicle locations randomly with 80% SOC and execute the simulation depicted in Fig. 3. The simulation is for outputs over a 24-h operation period. However, the model is run until every vehicle recharges its batteries more than two times, beyond 24 h. This is because, while wait times are short when all vehicles have enough SOC early on, wait times increase when vehicles start to recharge their batteries. According to pilot simulation experiments, when every vehicle recharges at least two times, wait times become stable. We used outputs of the last 24 h after every vehicle recharges two times.

Due to the stochastic nature of the simulation, we run the simulation ten times for each individual set of inputs and average them. Total service time is used to calculate service income, and total vehicle driving distance is used to calculate AEV operating cost.

A metamodel was created from this simulation to facilitate system optimization. We run simulations for 10,000 inputs generated using the Latin hypercube sampling routine in MATLAB [23]. The results show that fleet size and trip requests affect wait time most strongly under predetermined lower and upper bounds of inputs. As long as fleet size is sufficiently large to cover the trip requests, other factors such as vehicle range, charging time, and charging stations number do not affect wait time much. When fleet size is not large enough, the wait time becomes sensitive to other factors as well.

An initial data analysis before metamodeling was done plotting the 10,000 output points, see Fig. 4 where the x-axis is the number of vehicles per trip request and the y-axis is the wait time. The ratio "vehicles per trip request" affects wait time substantially. For system-level optimization, a metamodel was created using the neural networks software in MATLAB [23]. Test R value on average was 0.978. The support vector machine (SVM) software in MATLAB [23] was also used to classify infeasible designs that yield long wait times. The constraint on wait time was set at less than 30 min.

The AEV operating cost model includes insurance, tax, maintenance, and overhead costs by adopting the cost models in Ref. [8]: insurance cost = \$3000 × years × vehicles; tax = \$600 × years × vehicles; maintenance cost = \$0.05 × driving miles; and

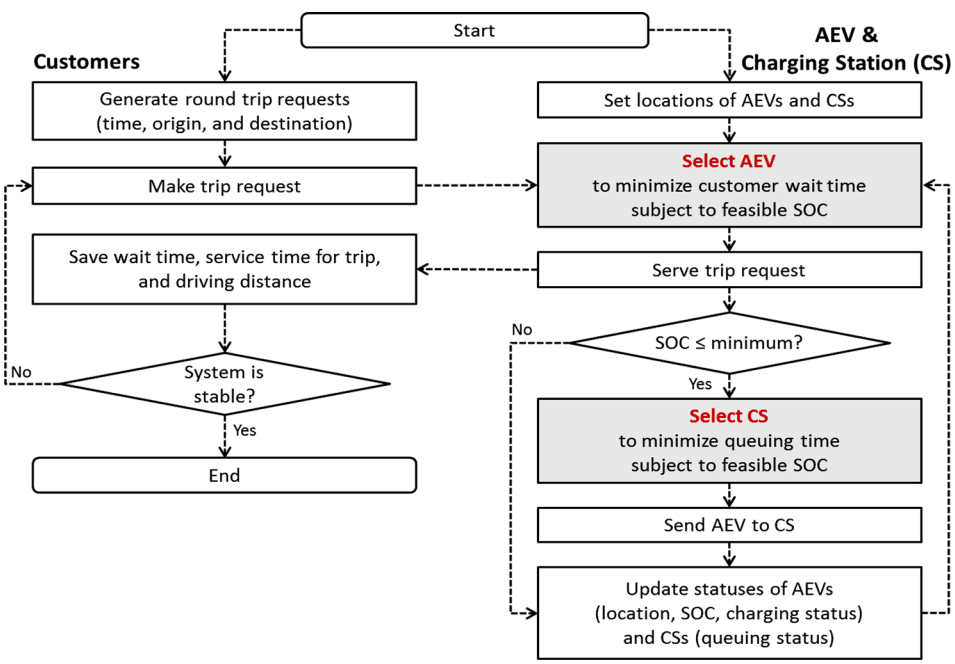

Fig. 3 AEV fleet assignment simulation model

Downloaded From: http://mechanicaldesign.asmedigitalcollection.asme.org/ on 10/19/2016 Terms of Use: http://www.asme.org/about-asme/terms-of-use

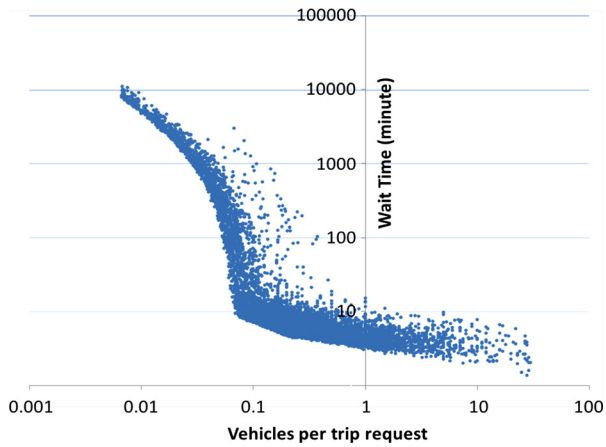

Fig. 4 Wait time simulation results

Table 2 Optimal charging station locations (A to O) [21]

No. of CSs	Optimal CS locations
1	I
2	D,N
3	D,K,N
4	A,G,K,N
5	A,B,G,K,N
6	A,B,G,H,K,N
7	A,B,G,H,K,L,N
8	A,B,G,H,K,L,N,O
9	A,B,E,G,H,K,L,N,O
10	A,B,D,F,G,H,K,L,N,O
11	A,B,C,D,G,H,I,K,L,N,O
12	A,B,C,D,G,F,H,I,K,L,N,O
13	A,B,C,D,G,F,H,I,J,K,L,N,O
14	A,B,C,D,G,F,H,I,J,K,L,M,N,O
15	A,B,C,D,E,G,F,H,I,J,K,L,M,N,O

overhead cost $= \$1000 \times$ years $\times$ vehicles. Net present value (NPV) with 10% discount rate is used for all cost calculations with 10 yr of business operations assumed.

To compare AEV and AV services, we used the same operating process. AVs use existing gas stations in the service area and we assumed it takes 5 min to refuel a vehicle. We selected 55 gas stations in Ann Arbor and determined locations (coordinates) using Google maps. The same operating cost model for AEVs was also used for AVs.

2.2 Charging Station Location Model (Operations 2). The charging station location model from Ref. [21] with the p-median model [24] is used to determine optimal station locations in Ann Arbor. The locations of p-stations are selected to minimize the average distance between AEV locations and the closest p-stations, where p indicates the number of stations. Since an AEV fleet needs space not only for charging but also for maintenance, the 15 candidate locations (A to O) were selected among the existing public parking lots in Ann Arbor as shown in Fig. 5.

The best combination of charging stations given the number of stations available is computed assuming that AEVs are deployed uniformly in Ann Arbor (11×11 miles). The optimal locations are determined prior to system-level optimization, as per Table 2. This look-up table is then used in system optimization to find the optimal number of stations.

We assumed direct current (DC) fast-charging stations with a single charger. The charging cost includes installment,

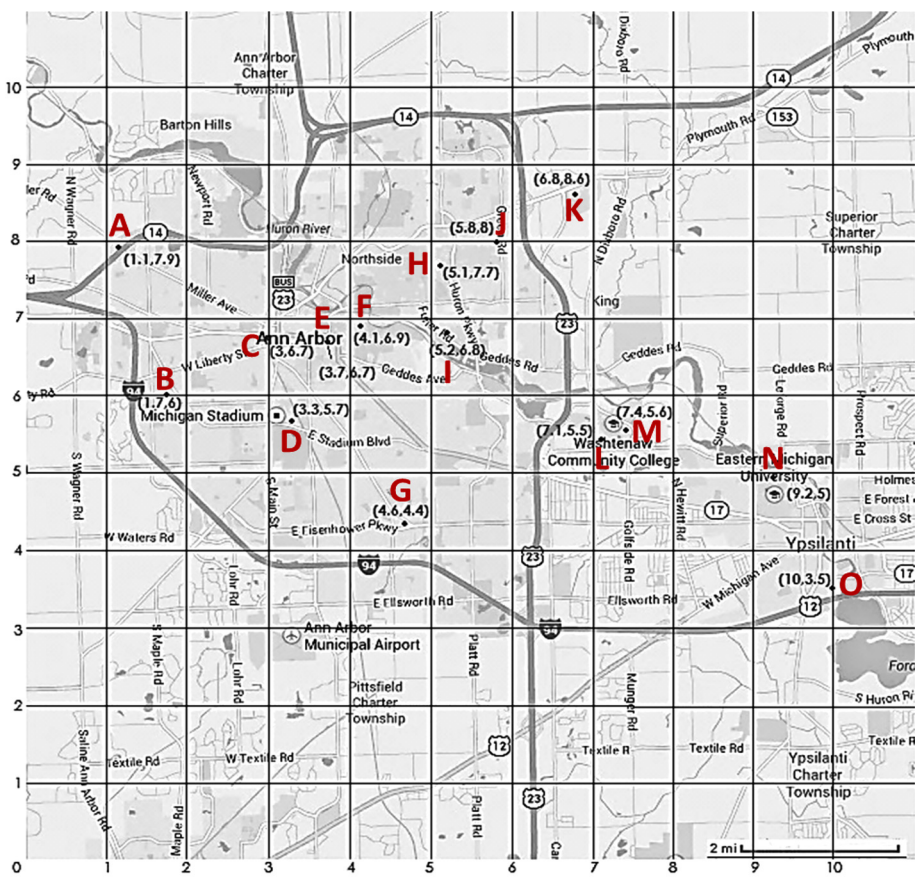

Fig. 5 Candidates for charging station locations [21]

Downloaded From: http://mechanicaldesign.asmedigitalcollection.asme.org/ on 10/19/2016 Terms of Use: http://www.asme.org/about-asme/terms-of-use

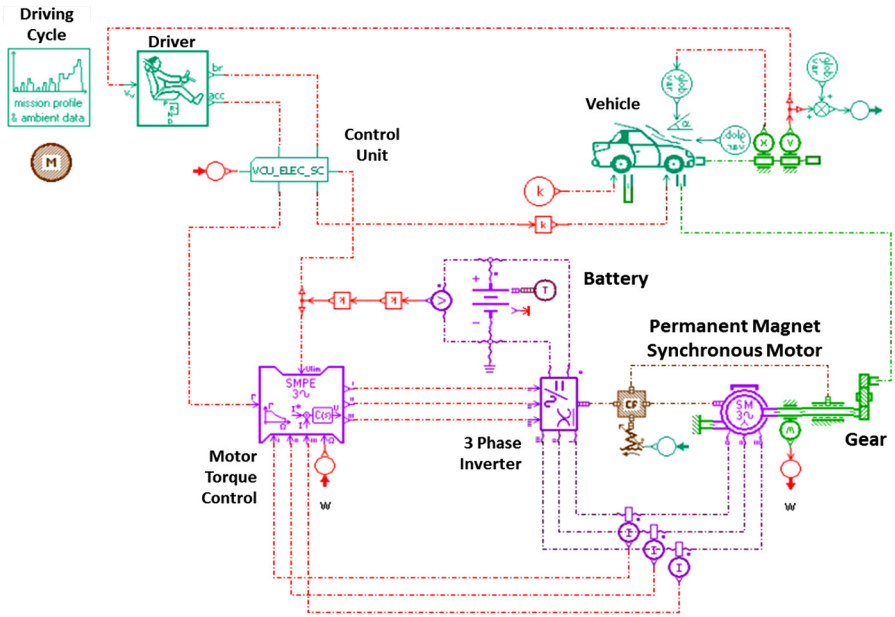

Fig. 6 Engineering simulation model [15]

Table 3 Engineering design variables

System	Design variables	Lower bound	Upper bound
Battery ($\mathbf{B}_{\mathrm{AEV}}$)	Number of cells in series in one branch	80	200
	Number of branches in parallel	1	4
Motor ($\mathbf{M}_{\mathrm{AEV}}$)	Stator inductance of the d-axis	1.62 mH	3.42 mH
	Stator inductance of the q-axis	1.98 mH	4.18 mH
	Stator resistance	0.001 Ω	0.1 Ω
	Number of pole pairs	1	4
Gear	Gear ratio (G_{AEV})	2	12

maintenance, and electricity costs. Fast DC charger cost models are adopted from Ref. [25]: installment cost = \$75,000 × chargers; maintenance cost = \$5500 × chargers. For electricity cost, 10.28 cents/kWh is used based on average retail price for transportation in the U.S. [26]. In Sec. 3 we show results for different DC cost charger models and electricity cost in parametric studies. All costs are calculated over 10 yr with discount rate of 10%.

For AVs, the existing 55 gas stations in the service area are used, so there is no installment or maintenance cost. We used the gas price in Ann Arbor, \$1.974 as of Mar. 17, 2016 [27] and conducting a parametric study on gas price (see Sec. 3).

2.3 AEV Design Model (Engineering). The AEV design simulation model adopted from Ref. [15] consists of driver, control unit, motor torque control, battery, inverter, motor, and driving simulation models as shown in Fig. 6.

The model was built using the AMESIM software [28]. Here we focus on the lithium-ion battery, permanent magnet synchronous motor, and gearing design. Design variables and bound constraints are shown in Table 3. Bound constraints are based on engineering model simulations and market data.

This vehicle engineering performance is used to evaluate the inequality constraints in system-level optimization. These constraints ensure highway driving and service feasibility: range ($P_{\mathrm{AEV}_{\mathrm{range}}}$) ≥ 50 miles; top speed ($P_{\mathrm{AEV}_{\mathrm{speed}}}$) ≥ 70 mph; and 0 to 60 ($P_{\mathrm{AEV}_{\mathrm{accel}}}$) ≤ 30 s.

Range ($P_{\mathrm{AEV}_{\mathrm{range}}}$) and charging time ($P_{\mathrm{AEV}_{\mathrm{charging}}}$), as outputs of the simulation, are used in the fleet assignment model (Sec. 2.1) as inputs. Since AEV sharing is a city-based service, we used the FTP-75 driving cycle in Fig. 7.

Vehicle and battery parameter values are based on the Nissan Leaf [29,30]. Charging time is estimated based on battery capacity using linear scaling and assuming it takes 30 min for a DC fast charging station to recharge 80% of 24 kWh battery. The metamodel for system-level optimization was built using the Matlab Neural Networks package [23]. Detailed analytical equations for each

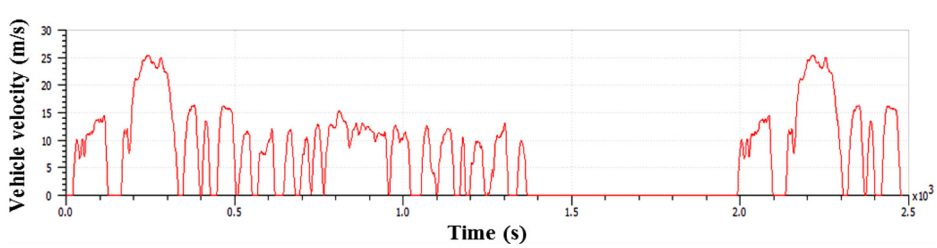

Fig. 7 FTP-75 driving cycle [28]

Downloaded From: http://mechanicaldesign.asmedigitalcollection.asme.org/ on 10/19/2016 Terms of Use: http://www.asme.org/about-asme/terms-of-use

Table 4 Attribute levels and importances

Attributes	Level 1	Level 2	Level 3	Level 4	Importance (%)
Pick-up and return type	Self	Autonomous	—	—	14.7
Time required for pick-up and return (min)	5	10	20	30	13.5
Membership fee (\$/month)	0	3	6	9	45.7
Driving rates (\$/10 min)	1	1.5	2	2.5	26.1

design component can be found in Ref. [15]. To estimate EV cost, we used battery pack and a motor costs as variable costs; all other costs assumed fixed at a total of \$6000. Battery cost was assumed at \$500/kWh following Ref. [15]. Motor cost was computed from Ref. [31]: motor cost (\$) = 16 × motor power (kW) + 385.

The autonomous driving module cost is estimated broadly to be from \$2500 to \$250,000 depending on technology maturity [8,11]. Here, we used \$10,000 for the autonomous module of AEV and AV assuming the technology becomes robust and we computed the break-even cost (see Sec. 3).

For AV sharing services, we use the existing gasoline vehicle design without optimization. We adopted the gasoline vehicle model from Ref. [21] that has similar specifications to the Volkswagen Jetta. City mode miles per gallon and driving range are 23 and 334 miles, respectively, with a 14.5 gal fuel tank. Vehicle cost is assumed to be \$10,000.

2.4 Service Demand Model (Marketing). We used hierarchical Bayesian (HB) choice-based conjoint [32,33] to build a heterogeneous service demand model. The service demand model predicts the number of memberships and the number of trip requests using the service attributes: pick-up and return type (i.e., autonomous or self); time required for pick-up and return; membership fee; and driving rates. Attribute levels are based on existing car sharing services [3,4,34] as shown in Table 4.

The individual-level utility v_{ij} is defined as

$$v_{ij} = \sum_{k=1}^{K} \sum_{l=1}^{L_k} \boldsymbol{\beta}_{ikl} z_{jkl} \tag{12}$$

where z_{jkl} are binary dummy variables representing alternative j possesses attribute k at level l, and β_{ikl} are the part-worths of attribute k at level l for individual i [35].

In HB conjoint, it is assumed that an individual's part-worths, $\boldsymbol{\beta}_i$, are drawn from a multivariate normal distribution, $\boldsymbol{\beta}_i \sim N(\theta, \boldsymbol{\Lambda})$, where θ is a vector of means of the distribution of individuals and $\boldsymbol{\Lambda}$ is the covariance matrix of that distribution. When information (such as demographics) is available on individuals, it is further possible to write a hierarchical model for the mean (θ) as a function of this information.

The choice probability is calculated using the logit model

$$P_{ij} = \frac{e^{v_{ij}}}{\sum_{j' \in J} e^{v_{ij'}}} \tag{13}$$

where P_{ij} is the probability that individual i chooses option j from a set of alternatives J. Then we draw an individual's part-worths using Markov chain Monte Carlo (MCMC). For the case study, we used every tenth draw from the last 50,000 (of 100,000 total) as is standard practice to reduce autocorrelation in the chain. After getting discrete part-worth coefficients, a natural cubic spline is used to interpolate the intermediate values of attributes, and create individual-level utility models with respect to continuous attributes. Average market demand q_j can be forecast by the choice probabilities P_{ij} and market potential s

$$q_j = \frac{1}{I} \sum_{i=1}^{I} s P_{ij} \tag{14}$$

More detailed description of this demand model can be found in Refs. [15] and [36]. Note that, in system-level optimization, we use an individual-level market demand ($q_{ij} = sP_{ij}$) for calculating profit, and then use the average profit for all individual market scenarios as objective. Therefore, the optimization result can account for a heterogeneous market.

For the study, we projected the potential market size of car sharing membership in the service area to be 1072 based on population ratio (i.e., service area population in Ann Arbor and Ypsilanti/U.S. population = 0.089%) and U.S. market size with 1.2×10^6 car sharing members as of January 2014 [2,8]. A previous study showed that the potential market size does not affect the market share of AEV service but only the profit [10]. Accurate potential market size estimation is important for predicting accurate profit of a new service; however, it is not critical for comparing the two services, AEV and AV. The number of daily trip requests is estimated from the number of AEV service memberships and frequency of use, assuming that members use a car sharing service 3.34 times per month [1]: potential daily trip requests = car sharing memberships × 3.34/30 days. As a market competitor, we used the Zipcar service in Ann Arbor.

Consumer choice data are gathered using a choice-based conjoint survey from 245 subjects who live in Ann Arbor or similar sized cities in the U.S. subjects were hired through the survey company ClearVoice Research [37]. We eliminated subjects who chose the "None" option for more than half of all choice questions, and thus used results from 178 subjects as potential car sharing members. We then built 178 individual-level utility models. The importance of attributes is shown in Table 4, which presents average values of importance for each individual-level model. The subjects consisted of 44% males and 56% females; 4% were 18–24 yr of age, 21% were 25–34 yr of age, 21% were 35–44 yr of age, 22% were 45–54 yr of age, 19% were 55–64 yr of age, and 13% were more than 65 yr of age.

In the car sharing service market model, here it is assumed we would take existing customers only from other car sharing service competitors. To include customers in the call taxi service market, we must build one more service demand model by conducting another conjoint survey that includes call taxi service attributes. Then we can estimate how many customers might be taken away from traditional call taxi service competitors, and combine the call taxi service demand with the car sharing demand. Conducting a single conjoint survey for both car sharing and call taxi services would be a simpler approach, but defining service attributes that represent both of these two different markets is a challenge.

Section 3 discusses the optimal decisions that maximize service profit using the models in Sec. 2.

3 Optimization Results

We used a genetic algorithm (GA) for global search and sequential quadratic programming (SQP) for local search using MATLAB [23] to solve the mixed-integer optimization problem of Eq. (1). A challenge of this optimization framework is that the service demand (Sec. 2.4) and the fleet assignment models (Sec. 2.1) are coupled so that each response (wait time and trip requests) requires the other model's response as its input, as shown Fig. 2. We used fixed point iteration (FPI) to execute one model with an initial guess, the result then used by the other model iteratively until convergence. An integrated GA and SQP optimization run took 52 min on average using parallel computing on a desktop machine with Intel i7 CPU 860 at 2.80 GHz and 8.00 GB RAM. The GA population size was 300.

Downloaded From: http://mechanicaldesign.asmedigitalcollection.asme.org/ on 10/19/2016 Terms of Use: http://www.asme.org/about-asme/terms-of-use

Table 5 Optimal decision values of two services

Model	Variable	AEV	AV
Vehicle design (engineering)	Number of cells in series in on branch	178	—
	Number of branches in parallel	2	—
	Stator inductance of the d-axis	2.23 mH	—
	Stator inductance of the q-axis	2.86 mH	—
	Stator resistance	0.008 Ω	—
	Number of pole pairs	3	—
	Gear ratio	4.40	—
Fleet assignment (operation 1)	Fleet size	8	8
Station locations (operation 2)	Number of stations	1	55
	Locations of stations	I	Given
Service demand (marketing)	Membership fee	$6.46	$4.97
	Driving rate	$2.47	$2.50

Table 6 Responses of two services

		AEV	AV
Market response	Total profit	$1.76 million	$1.71 million
	Market share	86.0%	88.9%
	Memberships per vehicle	115:1	119:1
	Round trip requests per day	103	106
Sustainability	Emission per day	178 kg	832 kg
	Social cost for 10 yr	$68,200	$318,900
Fleet operating	Wait time	11.9 min	9.7 min
	Fleet service distance per day	2261 miles	2153 miles
Vehicle specs	Range	257 miles	333.5 miles
	Top speed	113 mph	132 mph
	Acceleration (0–60)	14.9 s	9.4 s
	MPGe	193	23
	Battery capacity	44.8 kWh	—
	Refueling time	56 min	5 min
	Motor power	86.9 kW	—
Cost	Total	$1.03 million	$1.11 million
	Fleet ownership (vehicle ownership)	$321,000 ($40,163)	$160,000 ($20,000)
	Insurance	$159,000	$159,000
	Tax	$32,000	$32,000
	Fuel	$78,000	$448,000
	Fleet maintenance	$274,000	$261,000
	Overhead cost	$53,000	$53,000
	CS maintenance	$37,000	—
	CS installment	$75,000	—

Simulation results for AEV and AV sharing services with optimal decisions and market responses are shown in Tables 5 and 6, respectively. To calculate profit, we used the posterior modes for each of the 178 consumer's preference parameters so that profit response reflects preference heterogeneity; optimization relied on aggregated consumer preference. The values in Table 6 present the average values of 178 responses.

Some observations on the optimization results are as follows.

First, AEV and AV services are both feasible and marketable. Optimized fleet size, vehicle range, and number of charging stations resulted in reasonable wait time (11.9 min) in AEV service. AEV service requires larger wait time than AV service (9.7 min) because AEV has smaller driving range (257 miles) and requires long charging time (56 min). That is why AEV service has more fleet service distance (2261 miles) than AV even though AEV has smaller customer demand (103 trips) than AV.

Membership fees and driving rates for AEV and AV services are more expensive than those of a competitor (Zipcar service) (membership: $6, driving rate: $1.5). The simulation result of Chen et al. [11] showed that AEV requires $0.41 to $0.47 per mile as driving rate. However, our result shows that both AEV and AV service can take a larger market share than a traditional sharing service even if service fees are high due to the benefit of autonomous technology. Especially, customers are less sensitive to driving rates than membership fees, which is inferred by the optimal driving rate results hitting or almost hitting the upper bound ($2.50) and large importance of membership fee as shown in Table 4. Note that the importance is only over the ranges of the variables chosen for the study. Customers are likely to pay more due to the benefits of autonomous pick-up and return and short wait time required for pick-up and return.

In terms of memberships per vehicle (115:1 for AEV), our results show that we do not need many vehicles for service due to optimal vehicle assignment scheduling, whereas current car sharing service has 72 memberships per vehicle on average as of January 2014 in the U.S. [2]. While this will depend on market demand and city environment, it is shown that small fleet size with optimal scheduling can cover broad service demand.

Second, AEV service is more sustainable than AV, where the greenhouse gas (GHG) emission for AV can be computed by a driving simulation [21]. AEV does emit GHG not only during vehicle driving but also during electricity production. We computed the GHG emission for electricity production following Ref. [38]. We also checked the social cost of carbon (SC-CO_2) that represents the benefit of a CO_2 reduction. It is shown that AEV

Downloaded From: http://mechanicaldesign.asmedigitalcollection.asme.org/ on 10/19/2016 Terms of Use: http://www.asme.org/about-asme/terms-of-use

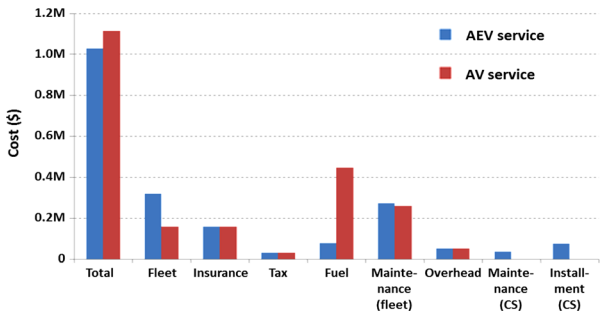

Fig. 8 Cost comparison between AEV and AV services

can save $250.7000 more in social cost during 10 yr of business compared to AV by using SC-CO_2 data [39].

Third, AEV service is more profitable than AV service in our current business scenario. AEV service has slightly larger profit than AV service. When we compared 178 heterogeneous market scenarios, 73% of the results showed AEV is better than AV. AEV has higher membership fee and yields longer wait time than AV, so its market share is smaller than AV. However, smaller total cost of AEV contributes to better profitability of AEV. The cost comparison is illustrated in Fig. 8. It is shown that AV service yields larger total cost due to higher cost in using gasoline compared to electricity, although AEV requires higher vehicle cost due to battery and charging station-related costs. AEV also requires larger maintenance cost since it must drive longer distance than AV to charge batteries due to the smaller number of charging stations than traditional gas stations. Insurance, tax, and overhead costs are the same because of the same fleet size.

Lastly, different business scenarios can change the results. Therefore, we conduct various parametric studies and sensitivity analyses.

(a) We solved the optimization problem with different electricity costs and gas prices: 30% increase and 30% decrease in cost from the current level for both electricity and gas. Results are shown in Fig. 9. The AV case is more sensitive to fuel cost because gas price covers the majority of total cost as shown in Fig. 8. When gas price decreases by 30%, AV becomes more profitable than AEV, which is a result opposite to the current business scenario. So, whether AEVs or AV are a better choice depends on the market scenario.
To account for uncertainty in gas prices, we generated 100 different gas price scenarios using geometric Brownian motion (GBM), where the volatility of gas price is set as $\sigma = 0.1688$ (see Refs. [40] and [41] for more detail process), and produced corresponding optimization results. Comparing profit results for AV and AEV for each scenario, 73% of scenarios showed that AEV was better than AV.

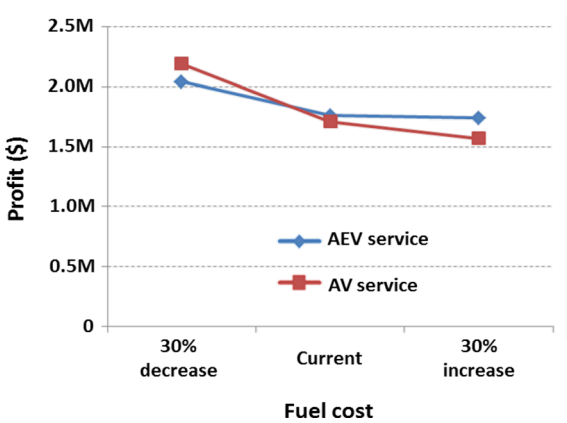

Fig. 9 Parametric study for fuel cost

(b) We tested a scenario where charging station cost becomes lower. This may happen through government subsidy [21] or maturity of recharging technology. We optimized with $10,000 for installment cost and $1000 for maintenance cost that is the lowest estimated cost for a level III charger [42], while we used $75,000 for installment and $5500 for the previous optimization. In the new set of results, we still have one charging station, but with decreased membership fee ($6.5 → $5.7), which yields both larger market share (86.0% → 88.3%) and larger profit (1.76 M → 1.98 M). Fleet size did not change, and AEV vehicle design was very similar. Also, one charging station is enough to operate the sharing service regardless of charging station cost, provided that charging schedules are optimal.

(c) We can estimate feasible autonomous technology cost using the model. This cost is not easy to estimate because the technology is still at an early stage of development. We assume $10,000 in autonomous module costs (initial acquisition costs) as a positive scenario in our current result. Then, the break-even autonomous module costs are $240,632 for AEVs and $222,655 for AVs. This means that autonomous module cost beyond these values result in unprofitable service. Interestingly, $250,000 is the highest estimated cost for autonomous technology for the Google autonomous car [11].

(d) In AV, the driving rate ($/10 min) at the optimum hits its upper bound ($2.5) as shown in Table 5. The Lagrangian multiplier for this boundary constraint is 11,474, which represents the dollar increase in profit Π (on an optimized base of $1.71 million) associated with a $1 relaxation in the pricing constraint used in the conjoint design. Setting this bound merits further attention and perhaps conducting further conjoint surveys.

4 Conclusion

Autonomous driving technology is expected to be deployed on a commercial scale within 10 yr, and electric powertrain technology already has been successfully launched in the market. Combining these two technologies will create car sharing service alternatives, including the AEV we studied here in terms of feasibility with respect to profit, operations, engineering, and marketing. Challenges for a new AEV sharing service system design are long battery charging times and low driving range, making the service potentially slow and even causing autonomous services terminations. The presented integrated decision framework for autonomous fleet assignment, charging station locating, and powertrain design can result in low wait time for customers and a stable service under different market simulations. Customer anxiety and discomfort with electric powertrains is reduced if AEVs recharge by themselves and come on time. Another concern is cost. However, in spite of the relatively large cost of AEV fleet and charging stations, the integrated analysis of the proposed AEV shows both high profit and market share compared not only to a traditional car sharing service but also to AV service.

From the optimal results, we obtained some insights. AEV service is more sustainable than AV in terms of GHG emissions. Service is profitable even with a high driving rate compared to traditional sharing services. Gas price and electricity cost are key factors in deciding the choice between AEV and AV services. Small number of charging stations can cover services with the advantage of autonomous charging scheduling. Even with high estimated autonomous technology cost, sharing service can be feasible.

The study is a novel application of DMS that combines multiple domains of knowledge to estimate profitability of future driverless mobility services, a topic of much current interest and speculation.

Downloaded From: http://mechanicaldesign.asmedigitalcollection.asme.org/ on 10/19/2016 Terms of Use: http://www.asme.org/about-asme/terms-of-use

Future work can address additional scenarios and parametric studies to explore the range of applicability of the reported results. Despite the modeling limitations, such studies can provide insights in design decision making for emerging product markets.

Acknowledgment

This research was partially supported by a Dow Distinguished Award for Interdisciplinary Sustainability and by an MCube Grant at the University of Michigan. This support is gratefully acknowledged. The study is an extension of a previous conference publication by the authors [10].

Nomenclature

$\mathbf{B}_{\mathrm{AEV}}$ = battery design variables
$\mathbf{F}$ = service fees
f_{AEV} = AEV design model (engineering)
f_{assign} = fleet assignment model (operations 1)
f_{CS} = charging station (CS) location model (operations 2)
f_{demand} = service demand model (marketing)
F_M = membership fee
F_R = driving rate
G_{AEV} = gear ratio
$\mathbf{L}_{\mathrm{CS}}$ = CS locations
M = number of memberships
$\mathbf{M}_{\mathrm{AEV}}$ = motor design variables
N_{CS} = number of CSs
$\mathrm{OC}_{\mathrm{AEV}}$ = AEV fleet operating cost
$\mathrm{OC}_{\mathrm{CS}}$ = CS operating cost
$\mathbf{P}_{\mathrm{AEV}}$ = AEV performance
$P_{\mathrm{AEV}_{\mathrm{accel}}}$ = acceleration
$P_{\mathrm{AEV}_{\mathrm{charging}}}$ = charging time
$P_{\mathrm{AEV}_{\mathrm{range}}}$ = range
$P_{\mathrm{AEV}_{\mathrm{speed}}}$ = top speed
S_{AEV} = AEV fleet size
$\mathrm{ST}_{\mathrm{AEV}}$ = service time
T = number of trip requests
VC_{AEV} = AEV ownership cost
W = wait time
X_{AEV} = AEV design variables
Π = profit

References

[1] Millard-Ball, A., 2005, *Car-Sharing: Where and How It Succeeds*, Vol. 108, Transportation Research Board, Washington, DC.
[2] Shaheen, P., and Cohen, A., 2014, "Innovative Mobility Carsharing Outlook," University of Berkeley, Berkeley, CA.
[3] Zipcar, 2015, "Zipcar," Zipcar, Boston, MA, accessed Dec. 1, 2015, http://www.zipcar.com
[4] Car2go, 2015, "Car2go," Car2go, Stuttgart, Germany, accessed Dec. 1, 2015, https://www.car2go.com
[5] Litman, T., 2014, "Autonomous Vehicle Implementation Predictions," Victoria Transport Policy Institute, Victoria, BC, Canada, p. 28.
[6] GM, 2016, "GM and Lyft to Shape the Future of Mobility," GM newsroom, San Francisco, CA, accessed, Jan. 4, 2016, http://media.gm.com/media/us/en/gm/home.detail.html/content/Pages/news/us/en/2016/Jan/0104-lyft.html
[7] Uber, 2015, "Uber Taxi," Uber, San Francisco, CA, accessed Dec. 1, 2015, https://www.uber.com
[8] Burns, L. D., Jordan, W. C., and Scarborough, B. A., 2013, "Transforming Personal Mobility," Earth Island Institute, Columbia University, New York.
[9] Fagnant, D. J., and Kockelman, K. M., 2014, "The Travel and Environmental Implications of Shared Autonomous Vehicles, Using Agent-Based Model Scenarios," Transp. Res. Part C: Emerging Technol., **40**, pp. 1–13.
[10] Kang, N., Feinberg, F. M., and Papalambros, P. Y., 2015, "Autonomous Electric Vehicle Sharing System Design," ASME Paper No. DETC2015-46491.
[11] Chen, T. D., Kockelman, K. M., and Hanna, J. P., 2016, "Operations of a Shared, Autonomous, Electric Vehicle Fleet: Implications of Vehicle & Charging Infrastructure Decisions," Proceedings of the 95th Annual Meeting of the Transportation Research Board, Washington, D.C., Jan. 10–14.
[12] IHS, 2014, "Emerging Technologies: Autonomous Cars–Not If, but When," IHS Automotive Report, IHS Markit Global, London.
[13] Chen, T. D., and Kockelman, K. M., 2016, "Management of a Shared, Autonomous Electric Vehicle Fleet: Implications of Pricing Schemes," Transportation Research Record: Journal of the Transportation Research Board, **2572**, p. 37.
[14] Jorge, D., and Correia, G., 2013, "Carsharing Systems Demand Estimation and Defined Operations: A Literature Review," EJTIR, **13**(3), pp. 201–220.
[15] Kang, N., Feinberg, F. M., and Papalambros, P. Y., 2015, "Integrated Decision Making in Electric Vehicle and Charging Station Location Network Design," ASME J. Mech. Des., **137**(6), p. 061402.
[16] Michalek, J. J., Feinberg, F. M., and Papalambros, P. Y., 2005, "Linking Marketing and Engineering Product Design Decisions Via Analytical Target Cascading," J. Prod. Innovation Manage., **22**(1), pp. 42–62.
[17] Lewis, K. E., Chen, W., Schmidt, L. C., and Press, A., 2006, *Decision Making in Engineering Design*, ASME Press, New York.
[18] Frischknecht, B. D., Whitefoot, K., and Papalambros, P. Y., 2010, "On the Suitability of Econometric Demand Models in Design for Market Systems," ASME J. Mech. Des., **132**(12), p. 121007.
[19] Kang, N., 2014, "Multidomain Demand Modeling in Design for Market Systems," Ph.D. thesis, University of Michigan, Ann Arbor, MI.
[20] Kang, N., Feinberg, F. M., and Papalambros, P. Y., 2013, "A Framework for Enterprise-Driven Product Service Systems Design," 19th International Conference on Engineering Design (ICED13), Seoul, Korea, Aug. 19–22, pp. 297–308.
[21] Kang, N., Ren, Y., Feinberg, F. M., and Papalambros, P. Y., 2016, "Public Investment and Electric Vehicle Design: A Model-based Market Analysis Framework With Application to a USA-China Comparison Study," Des. Sci., **2**, p. e6.
[22] Santos, A., McGuckin, N., Nakamoto, H. Y., Gray, D., and Liss, S., 2011, "Summary of Travel Trends: 2009 National Household Travel Survey," U.S. Department of Transportation, Federal Highway Administration, Technical Report No. FHWA-PL-ll-022.
[23] MathWorks, 2015, "Matlab r2013a," MathWorks, Natick, MA, accessed Dec. 1, 2015, http://www.mathworks.com
[24] Tansel, B. C., Francis, R. L., and Lowe, T. J., 1983, "State of the Art-Location on Networks: A Survey—Part i: The p-Center and p-Median Problems," Manage. Sci., **29**(4), pp. 482–497.
[25] Schroeder, A., and Traber, T., 2012, "The Economics of Fast Charging Infrastructure for Electric Vehicles," Energy Policy, **43**, pp. 136–144.
[26] EIA, 2014, "Electric Power Monthly With Data for January 2014," U.S. Energy Information Administration, Washington, DC, http://www.eia.gov/electricity/monthly/current_year/january2014.pdf
[27] GasBuddy, 2014, "Michigan Gas Price," GasBuddy, Boston, MA, accessed March 17, 2016, http://www.michigangasprices.com
[28] AMESim, 2015, "AMESim," Siemens Product Lifecycle Management Software Inc., Munich, Germany, accessed Dec. 1, 2015, https://www.plm.automation.siemens.com/en_us/products/lms/imaginelab/amesim/
[29] EERE, 2011, "Advanced Vehicle Testing Activity—2011 Nissan Leaf—Beginning of Test Battery Testing Results," U.S. Department of Energy, https://avt.inl.gov/sites/default/files/pdf/fsev/batteryleaf0356.pdf
[30] EERE, 2011, "Advanced Vehicle Testing Activity—2011 Nissan Leaf—Baseline Testing Results," U.S. Department of Energy, https://avt.inl.gov/vehicle-button/2011-nissan-leaf
[31] Simpson, A., 2006, "Cost-Benefit Analysis of Plug-In Hybrid Electric Vehicle Technology," 22nd International Battery, Hybrid and Fuel Cell Electric Vehicle Symposium and Exhibition, National Renewable Energy Laboratory, Yokohama, Japan, Oct. 23–28, Paper No. NREL/CP-540-40485.
[32] Rossi, P., Allenby, G., and McCulloch, R., 2005, *Bayesian Statistics and Marketing*, Wiley, Hoboken, NJ.
[33] Orme, B., 2009, "The CBC/HB System for Hierarchical Bayes Estimation Version 5.0 Technical Paper," Technical Paper Series, Sawtooth Software, Sequim, WA.
[34] Citycarshare, 2015, "Citycarshare," Carma, San Francisco, CA, accessed Dec. 1, 2015, https://www.gocarma.com/carshare/
[35] Green, P., and Krieger, A., 1996, "Individualized Hybrid Models for Conjoint Analysis," Manage. Sci., **42**(6), pp. 850–867.
[36] Michalek, J. J., Ebbes, P., Adigüzel, F., Feinberg, F. M., and Papalambros, P. Y., 2011, "Enhancing Marketing With Engineering: Optimal Product Line Design for Heterogeneous Markets," Int. J. Res. Mark., **28**(1), pp. 1–12.
[37] Clearvoice, 2015, "Clearvoice Research," Clearvoice Research, Denver, CO, accessed Dec. 1, 2015, http://www.clearvoiceresearch.com
[38] EIA, 2015, "How Much Carbon Dioxide is Produced Per Kilowatthour When Generating Electricity With Fossil Fuels?," EIA, Washington, DC, accessed Dec. 1, 2015, https://www.eia.gov/tools/faqs/faq.cfm?id=74&t=11
[39] EPA, 2015, "Social Cost of Carbon," U.S. EPA, Washington, DC, accessed Dec. 1, 2015, http://www3.epa.gov/climatechange/EPAactivities/economics/scc.html
[40] Kang, N., Bayrak, A. E., and Papalambros, P. Y., 2016, "A Real Options Approach to Hybrid Electric Vehicle Architecture Design for Flexibility," ASME Paper No. DETC2016-60247.
[41] Cardin, M.-A., and Hu, J., 2016, "Analyzing the Tradeoffs Between Economies of Scale, Time-Value of Money, and Flexibility in Design Under Uncertainty: Study of Centralized Versus Decentralized Waste-to-Energy Systems," ASME J. Mech. Des., **138**(1), p. 011401.
[42] Cities, C., 2012, "Plug-In Electric Vehicle Handbook for Public Charging Station Hosts," U.S. Department of Energy Publication No. DOE/GO-102012-3275.

Downloaded From: http://mechanicaldesign.asmedigitalcollection.asme.org/ on 10/19/2016 Terms of Use: http://www.asme.org/about-asme/terms-of-use