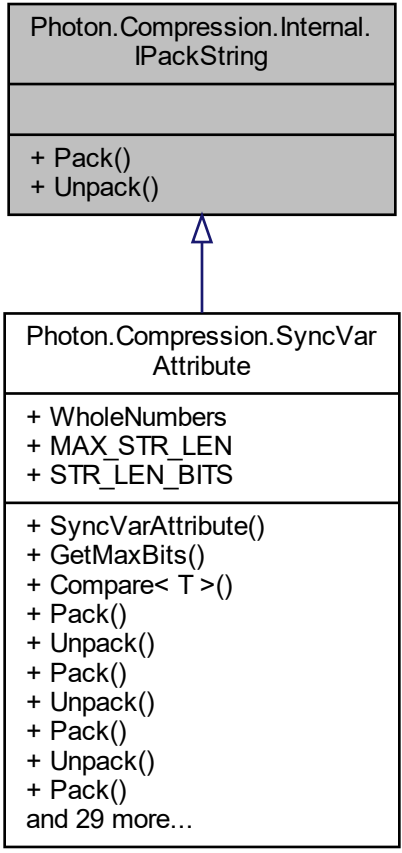
Photon.Compression.Internal.
IPackString
+ Pack()
+ Unpack()
Photon.Compression.SyncVar
Attribute
+ WholeNumbers
+ MAX_STR_LEN
+ STR_LEN_BITS
+ SyncVarAttribute()
+ GetMaxBits()
+ Compare< T >()
+ Pack()
+ Unpack()
+ Pack()
+ Unpack()
+ Pack()
+ Unpack()
+ Pack()
and 29 more...