UWBIoT Middleware Guide

Rev. 1 — 16 March 2026 User manual

1 UWB IoT Middleware

1.1 Introduction

UWB IoT Middleware provides API interface for communicating with various NXP based UWB devices. This middleware will run on an embedded host and communicate over UCI protocol with underlying UWB devices. It can be configured to run on different OSes, reference platforms and with different UWB features enabled.

Below are the details of supported UWB devices and their corresponding hosts:

Reference board	Host	UWB Device
FRDM-RW612	`RW612`	`SR250`

The MW is ported and run against the following OS:

- `Zephyr OS`

1.2 Acronyms

The following acronyms are used in this document.

Acronym	Description
BLE	Bluetooth Low Energy.
MCTT	Mac Conformance Test Tool.
PCTT	PHY Conformance Test Tool.
TDoA	Time Difference of Arrival.
UCI	The logical interface between Host and UWBS.
UWB	Ultra Wide Band.
UWB MW	Ultra Wide Band Middleware / Ultra Wide Band IoT Middleware.
UWBC	Ultra Wide Band Controller. For the scope of this SDK/Middleware, same as UWBS.
UWBD	Ultra Wide Band Device. For the scope of this SDK/Middleware, same as UWBS.
UWBS	Ultra Wide Band Sub System. It refers to SR100T, SR150, SR040. The UWBS is the hardware component implementing the FiRa PHY and MAC specifications. The UWBS interfaces with the FiRa Framework through the UWB Command Interface (UCI).
HDLL	Host Data Link Layer protocol used to download FW to SR200T, SR250 and SR200S.

2 Architecture

2.1 Folder Structure

The location and purpose of important files and folders is as shown here.

Note:

Some of these folders are to showcase how the future UWB IoT Middleware delivery would contain. And hence, some of these folders are not present in this MW Package.

2.1.1 Root Folder

Folder / File	Purpose
`LICENSE`	End User License Agreement
`SBOM.spdx.json`	Product Software Bill Of Materials
`uwbiot-top`	UWB source code

Folder / File	Purpose
`UWBIoT_MW_Porting_Guide.pdf`	Porting guide for UWB IoT Middleware

2.1.2 `/uwbiot-top/boards`

Folder / File	Purpose
`boards`	Boards specific adaptations, modifications and configurations
`boards/Host`	Board-specific configurations

Folder / File	Purpose
`boards/Host/nxp/frdm_rw612`	Board-specific configurations for FRDM_RW612

Folder / File	Purpose
`boards/uwbs`	UWB chip-specific configurations

Folder / File	Purpose
`boards/uwbs/SR2XX`	UWB chip configuration for SR2XX

Folder / File	Purpose
`boards/uwbs_driver`	NXP and Vendor-specific driver implementations
`boards/uwbs_driver/nxp_mcux`	Files / settings for NXP MCU drivers

All information provided in this document is subject to legal disclaimers.
© 2026 NXP B.V. All rights reserved.

2.1.3 /uwbiot-top/demos

The demos are in this folder. Please visit

- See Demo List SR250 with FRDM RW612
- `demos/common` :
  - This folder contains common files and demos required for all the demos.
- `demos/SR2XX` :
  - Demos that are specific for `SR250`.
- `demos/radar` :
  - Demos that are specific for Radar use case.

2.1.4 /uwbiot-top/docs

Folder / File	Purpose
`docs`	Documentation

2.1.5 /uwbiot-top/firmware_images

Prebuild Firmware Packages are kept here.

Folder / File	Purpose
`firmware_images` / `SR2XX`	Binaries / Firmware for `SR250`

2.1.6 /uwbiot-top/libs

Common libraries. These do not create an executable. They provide common functionalities.

2.1.6.1 /libs/halimpl

Important folders are as under:

Folder / File	Purpose
`libs` / `halimpl` / `fwd`	This module implements the FW download protocol and handles the formation of packet. It sends the packet to TML layer via HAL. It parses the response from HW and sends results back to application layer.
`libs` / `halimpl` / `fwdl_provider`	Common wrapper for firmware download
`libs` / `halimpl` / `hal`	Hardware Abstraction Layer. Hardware Abstraction layer sends and receives the UCI messages from HW/UCI stack. It is the interface layer for UCI stack and HW.
`libs` / `halimpl` / `inc`	Include files for Hardware Abstraction Layer
`libs` / `halimpl` / `log`	This module responsible for capturing and recording the UCI data. Logging Configurations for more information.
`libs` / `halimpl` / `osal`	Operating System Abstraction Layer (OSAL) layer abstracts and provide a standardized interface for interacting with the underlying operating systems or Real Time Operating System.
`libs` / `halimpl` / `tml`	Transport Mapping Layer

All information provided in this document is subject to legal disclaimers.
© 2026 NXP B.V. All rights reserved.

Folder / File	Purpose
`libs` / `halimpl` / `transport`	Transport Layer manges the flow of UCI data between HOST and UWBS to prevent congestion and ensure that UCI data is transmitted and received.
`libs` / `halimpl` / `utils`	This layer is utility helper for different kinds of signalling mechanism for HAL.

2.1.6.2 `/libs/uci-core`

Folder / File	Purpose
`libs` / `uci-core` / `src`	UWB Controller Interface Core. This module implements the UCI protocol and handle formation of UCI packet based on the request from application and send it to the TML layer via HAL. Parses the UCI responses and notification from HW and sends result back to the application.
`libs` / `uci-core` / `inc`	Include files for UWB Controller Interface Core.

2.1.6.3 `/libs/uwb-iot`

UWB IoT API and implementation layer.

Table 1. UWB IoT API and implementation layer

Folder / File	Purpose
`libs` / `uwb-iot` / `uwb_core` / `adaptation`	Adaptation layer between UWB and UCI , UCI Core functionality accessed by UWB API using adaptation layer .
`libs` / `uwb-iot` / `uwb_core` / `include`	Include files for UWB APIs
`libs` / `uwb-iot` / `uwb_api`	UWB platform independent APIs running on top of UCI core These APIs are exposed to the applications running on platforms supported by UWB IoT MW .
`libs` / `uwb-iot` / `uwb_api` / `fira_generic`	Fira generic API's for UWBS
`libs` / `uwb-iot` / `uwb_api` / `proprietary`	Vendor/Proprietary Specific API's for UWBS

Folder / File	Purpose
`libs` / `uwb-iot` / `uwb_api` / `proprietary` / `SRXXX`	Vendor/Proprietary Specific API's for SRXXX UWBS (SR1XX,SR2XX)

2.1.7 `/uwbiot-top/project`

Standalone projects for `SR250` are kept here

2.2 Block Diagram

Basic diagram to show portable and reference code.

All information provided in this document is subject to legal disclaimers.
© 2026 NXP B.V. All rights reserved.

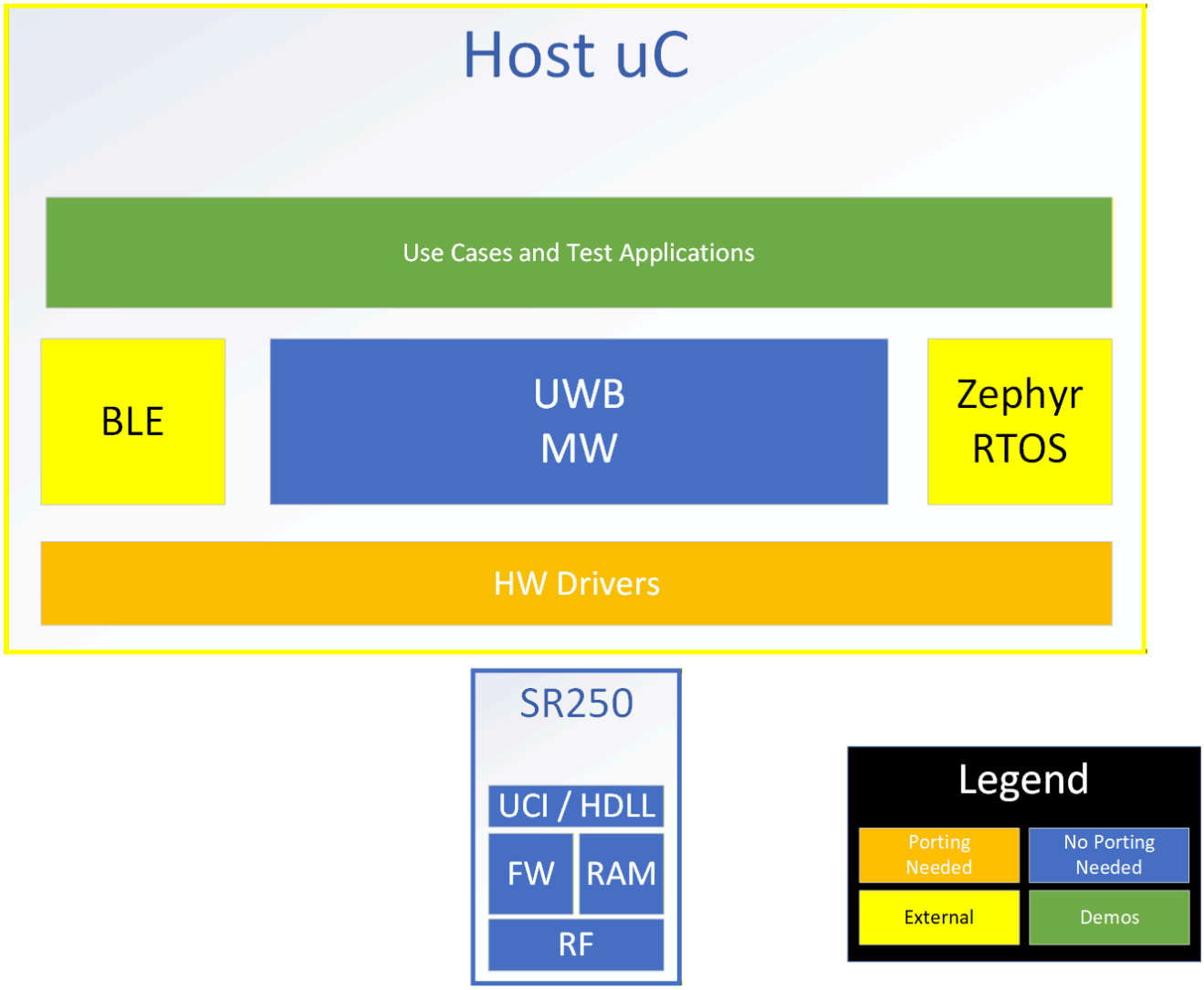

UWB MW

This MW interface provides UWB functionality for an application development.

2.2.1 SR250 - Zephyr RTOS

Integration of the Middleware with SR250 is as shown below.

All information provided in this document is subject to legal disclaimers.
© 2026 NXP B.V. All rights reserved.

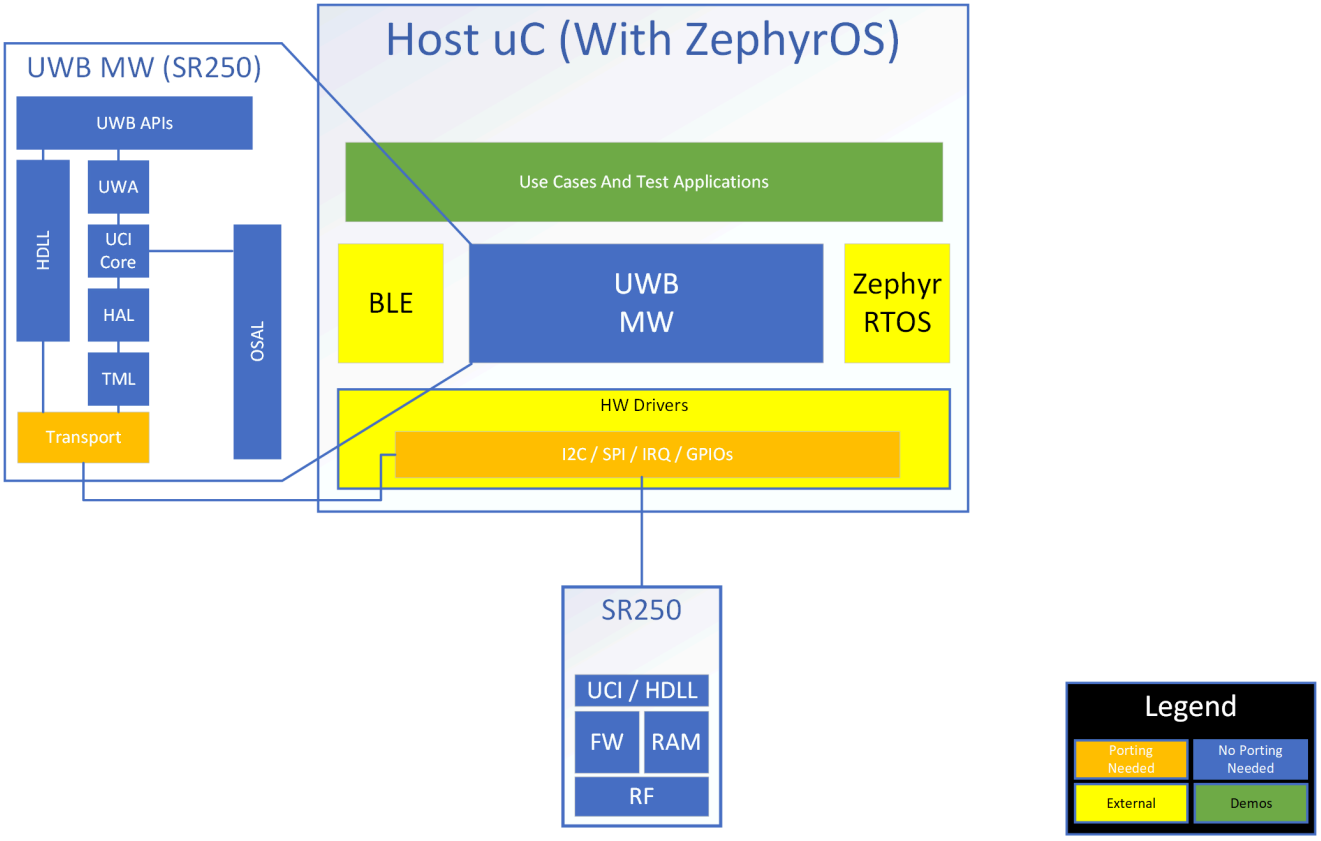

2.2.2 Components

Table below show overall UWB IoT MW architecture and it's components in various configurations.

Item	Description
Demos / Integration / Applications	The user applications which uses exposed UWB and SE APIs to achieve the required use cases for UWB.
UWB APIs	This is the thin layer of platform independent APIs running on top of UCI core. These APIs are exposed to the applications running on platforms supported by UWB IoT MW.
UWA - UWB Adaptation Layer	This is the mediator layer between UWB API and UCI core. UCI Core functionality is accessed by UWB API using adaptation layer.
UCI stack	This module implements the UCI protocol and handle formation of UCI packet based on the request from application and send it to the TML layer via HAL. Parses the UCI responses and notification from HW and sends result back to the application.
OSAL layer	Operating system Abstraction Layer implements all the OS functionality like thread creation, buffer management, timer management and thread synchronization.
HAL	Hardware Abstraction layer sends and receives the UCI messages from HW/UCI stack. It is the interface layer for UCI stack and HW. This layer shall wake up the HW on request and trigger the FW download.
TML layer	Transport Management Layer Implements SPI driver APIs to send and receive the UCI commands, responses and notification.

All information provided in this document is subject to legal disclaimers.
© 2026 NXP B.V. All rights reserved.

HDLL FW download	This layer implements the FW download functionality with Host Data Link Layer (HDLL) packets. FW download is triggered by HAL module and UWB HW is woken up. This mode is used for SR2XX.

2.3 Modes of operation of the MW

UWB IoT SDK has multiple modes of operations

2.3.1 Standalone Mode

- This is the default mode of operation.
- The demos run natively on the target MCU, and generally do not need any external stimulus.
- The SDK is delivered with the following:
  - UCI
  - HDLL
- Customer can run any application on MCU as dedicated application to configure the platform as Tag or Anchor
- If a customer decides to use their own MCU then UCI and HBCI stack should be re-usable.

All information provided in this document is subject to legal disclaimers.
© 2026 NXP B.V. All rights reserved.

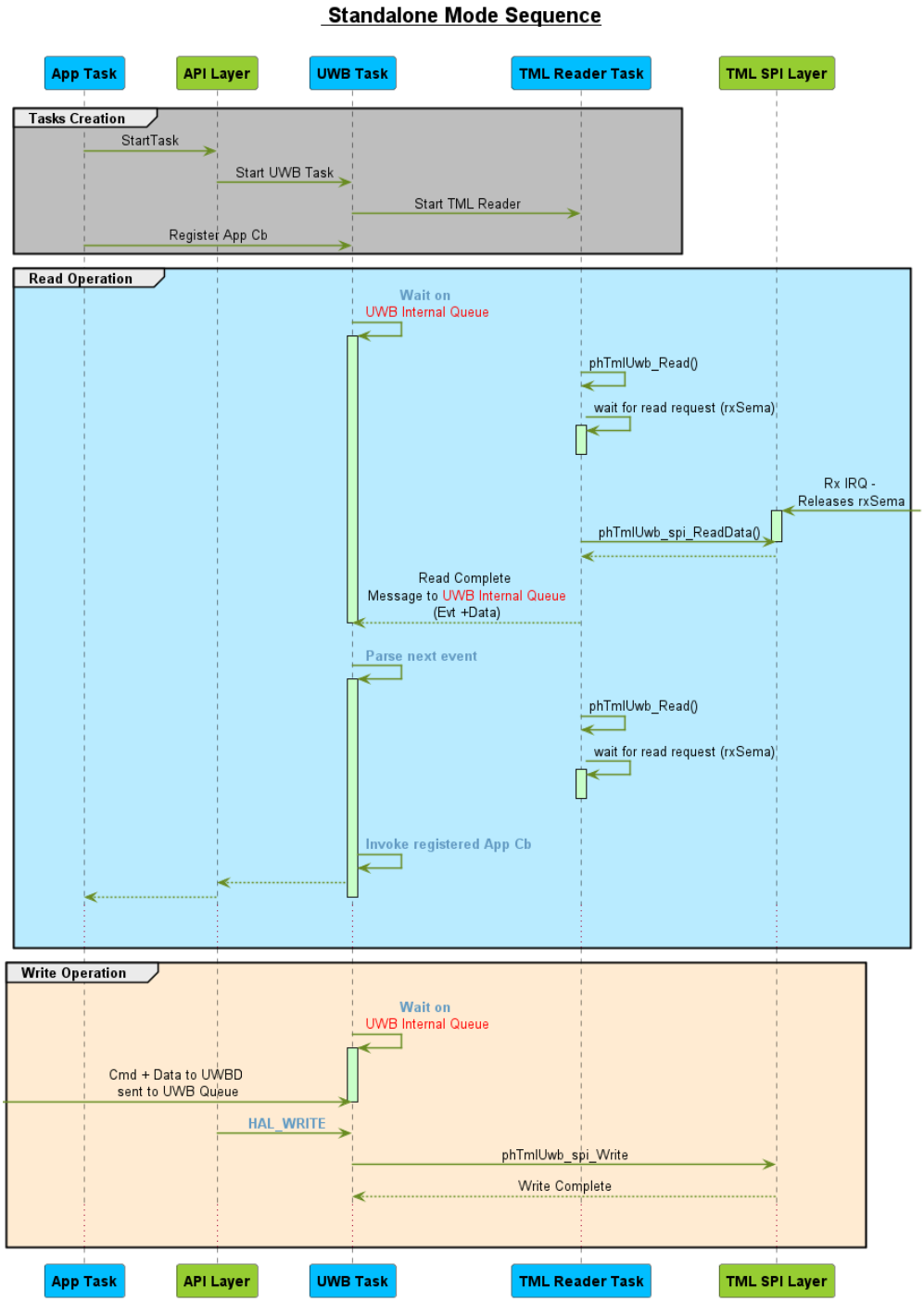

1

1 Used for SR250.

All information provided in this document is subject to legal disclaimers.
© 2026 NXP B.V. All rights reserved.

2.3.2 PNP Mode

- In this mode, the Host Micro Controller behaves as a tiny USB to SPI Bridge.
- The protocol between PC and the Host Micro Controller is designed to:
  - Reset the UWBD.
  - Get Unique ID of the Host Micro Controller.
  - Get version number of the PnP FW Running on the Host Micro Controller.
  - The protocol for PnP allows to download new FW via HBCI mode on SR100T and SR150.
- This can be used to directly Send and receive RAW UCI Commands from PC to the UWBD.
- Counterpart applications like UCI Tool, or small reference Python scripts can be used for quick prototyping and testing.

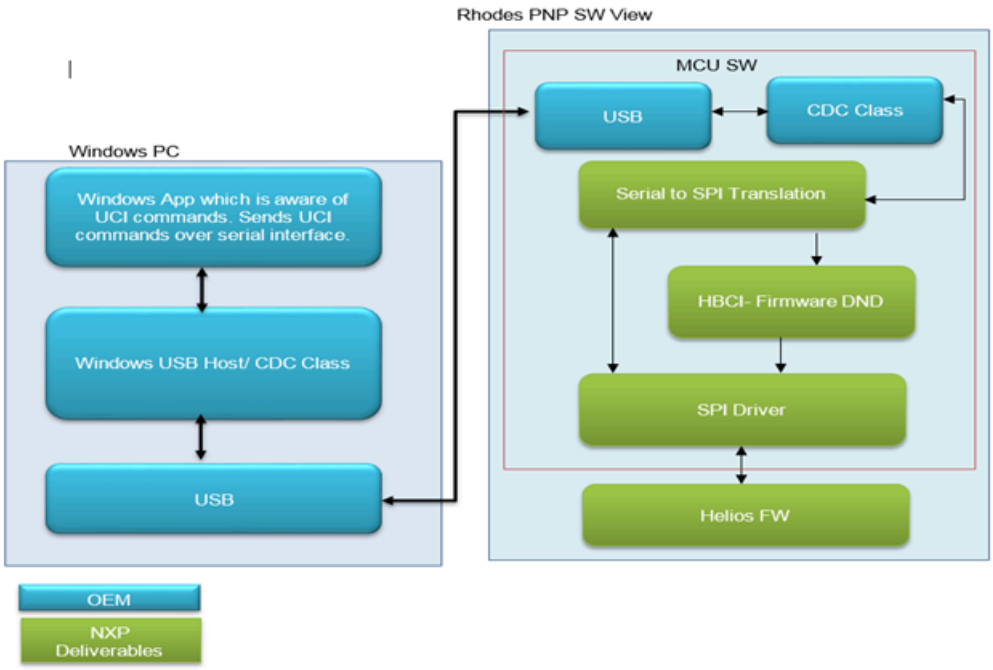

2.3.3 FiRa / MCTT / PCTT Mode

- In this mode, the host micro controller behaves as a tiny USB to SPI Bridge.
- The protocol is UCI.
- Only UCI Commands can be sent / received over this mode.
- Nothing special (as possible with PNP Mode) can be done in this mode.
- This mode is used for running PCTT and MCTT and related Test Suites.

All information provided in this document is subject to legal disclaimers.
© 2026 NXP B.V. All rights reserved.

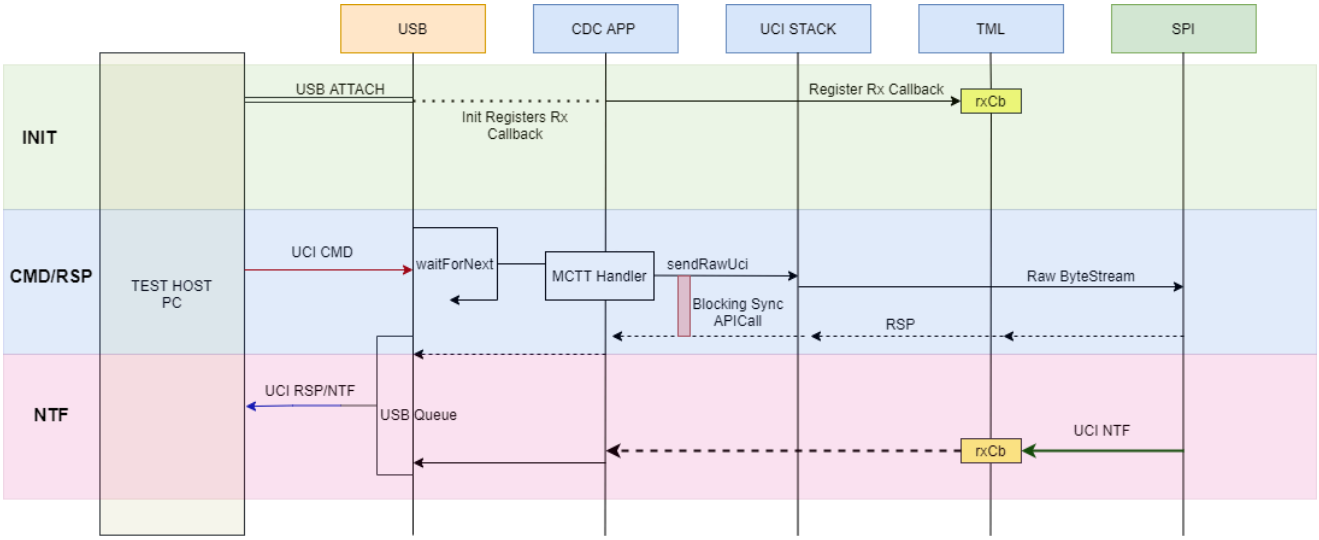

2 ,3

2.4 Dynamic View

2.4.1 UWB Stack Init Sequence

As a part of UWB Stack Init following things are done.

1. All required tasks are created and initialized.
2. Transport layer initialization.

1. HDLL FW download is done to initialize UWBD.

1. Board variant is set as per Host setup.
2. All default configs are applied.

2 Used for SR100T and SR150.
3 Used for SR040.

All information provided in this document is subject to legal disclaimers.
© 2026 NXP B.V. All rights reserved.

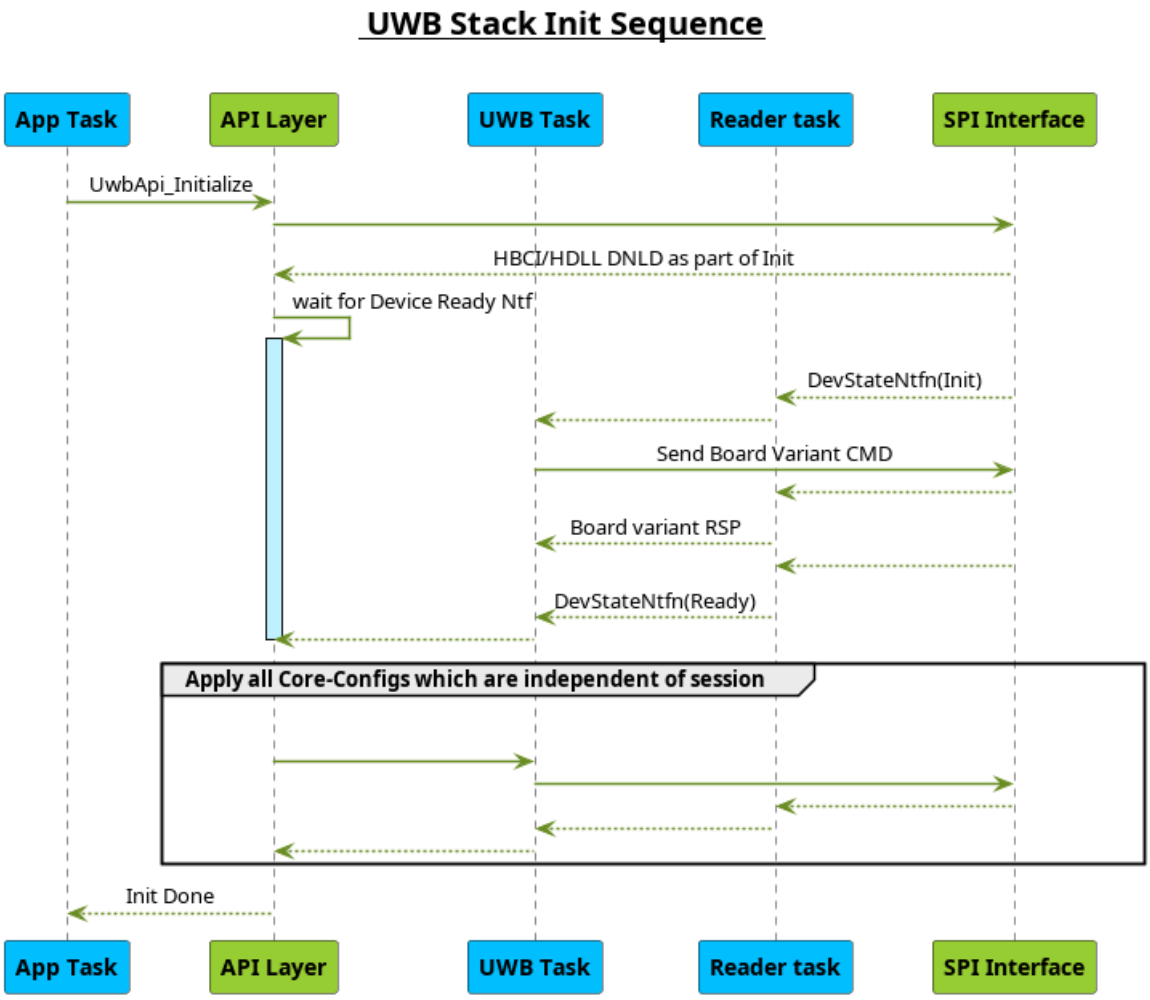

2.4.2 UWB Stack DeInit Sequence

As a part of UWB Stack DeInit following things are done.

1. Check if there are any active sessions created.
2. If active session count is more than Zero, de-initialize all active sessions.
3. MW stack de-init and memory cleanup.

All information provided in this document is subject to legal disclaimers.
© 2026 NXP B.V. All rights reserved.

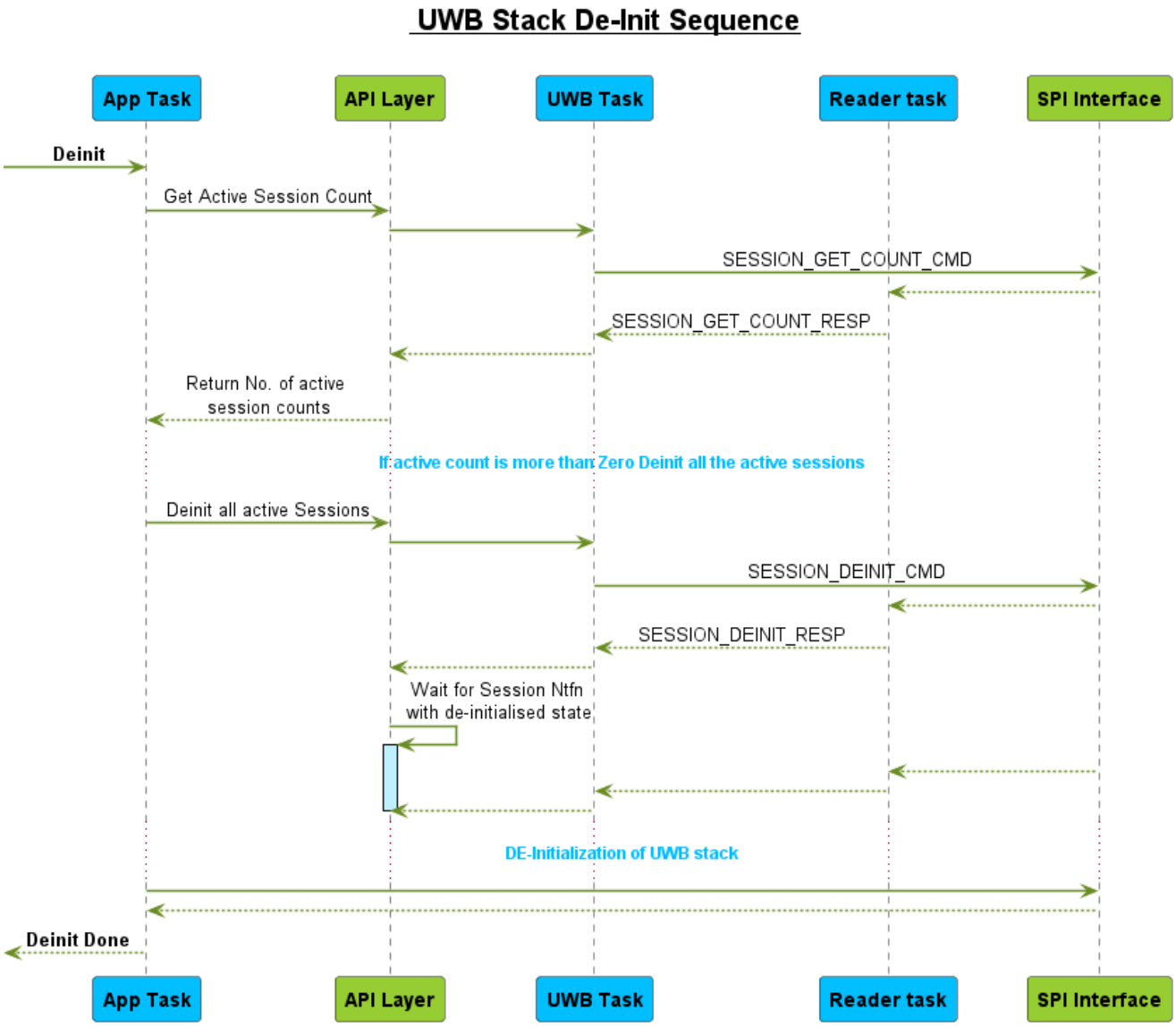

2.4.3 P2P, Multicast Ranging

As a part of P2P, Multicast ranging following operations are performed.

1. Before starting ranging UWB Stack should be in initialized state.
2. Below sequence is same for initiator and responder:
   a. Session is created for Ranging with 4 bytes unique session ID and session type `0x00`
   b. Same session ID should be used by both Initiator and responder.
   c. All default session configs are applied at the time of session creation.
   d. Application specific ranging configs are applied.
   e. Ranging is started.
   f. At the end ranging is stopped and session is de-initialized.

All information provided in this document is subject to legal disclaimers.
© 2026 NXP B.V. All rights reserved.

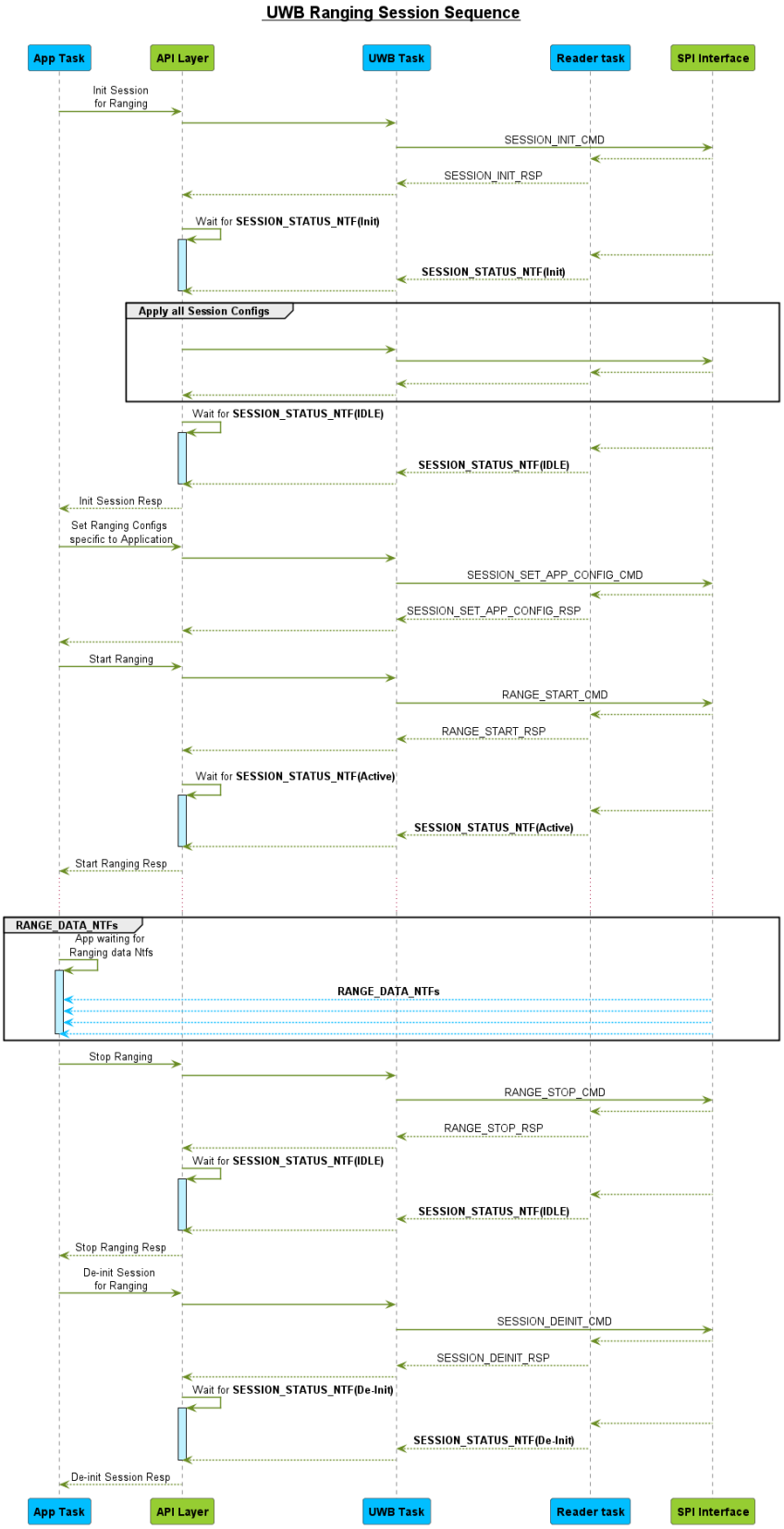

All information provided in this document is subject to legal disclaimers.

© 2026 NXP B.V. All rights reserved.

2.4.4 BLE - OOB

An out of the bounds setup for ranging with BLE would use the following sequence.

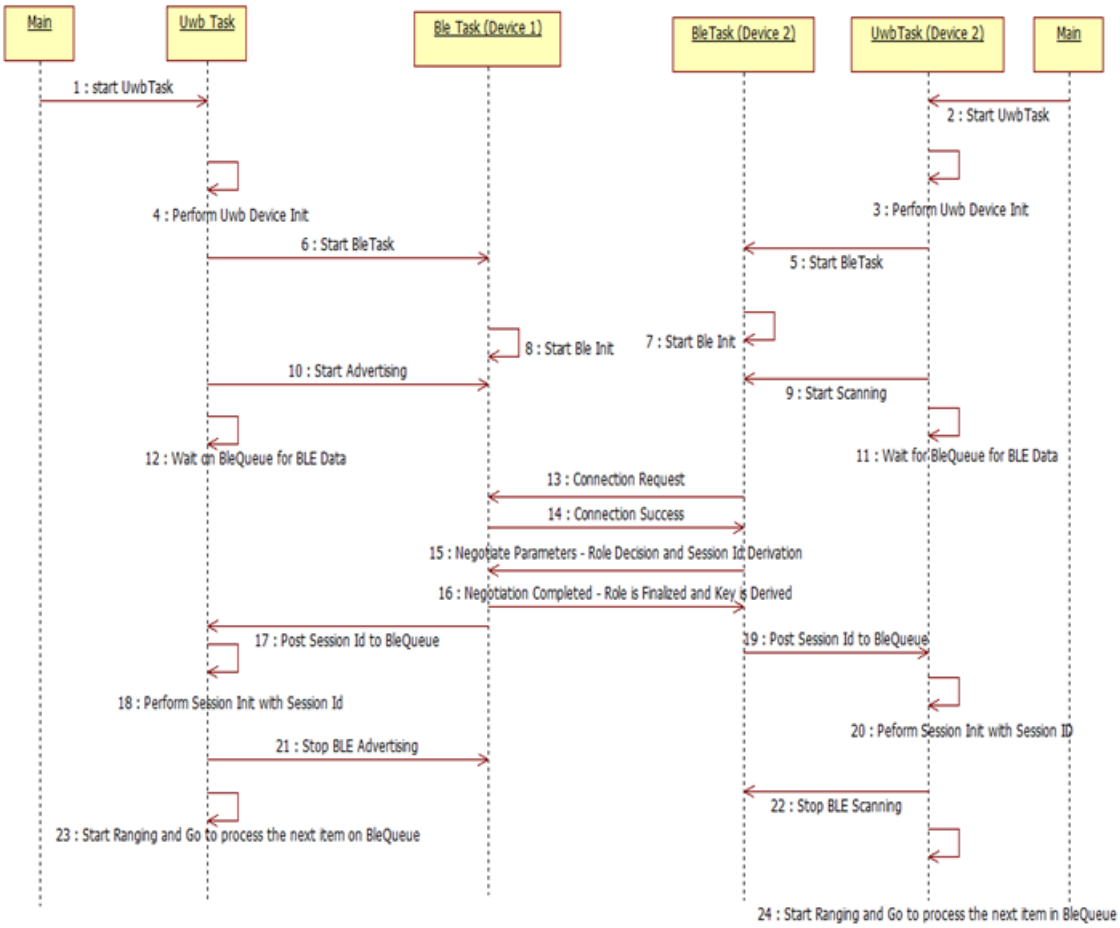

2.5 UCI Command timeout handling

The following process is done to handle command timeouts:

1. API is invoked from Application Task, UCI command is sent to UWBS as a part of API.
2. If response is not received command retry is attempted. If response is not received for the second time as well, UCI timeout status is notified to upper layers.
3. API gets unblocked wit status UCI timeout. Same status is returned to Application.
4. Applications post message to exception handling task or start recovery timer.
5. Application tasks waits for recovery
6. Exception handling task/ or in the context of timeout, Recovery API is invoked. Recovery API performs certain operations are shown in the flow diagram.
7. After recovery All session state context is deleted, and application task is restarted.

All information provided in this document is subject to legal disclaimers.
© 2026 NXP B.V. All rights reserved.

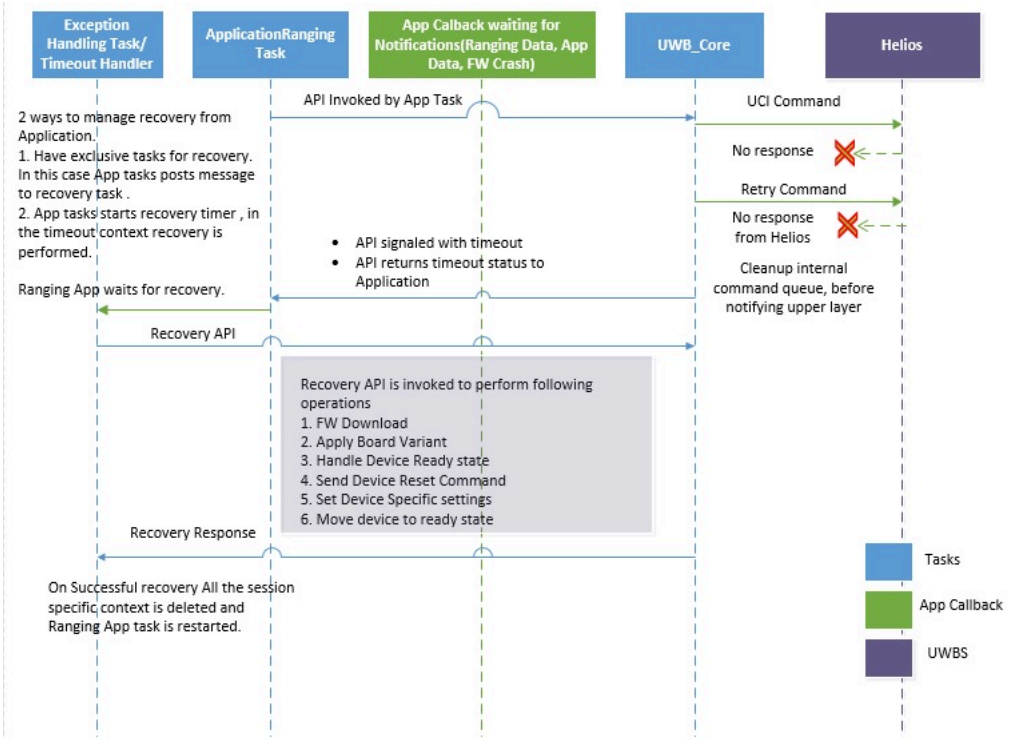

2.5.1 Recovery : FW Crash Handling from MW

Following steps are performed from MW to handle FW Crash

- During active ranging session FW can be crashed.
- FW Crash notification is sent to upper layers. (App callback)
- App callback posts message to exception handling task or starts recovery timer.
- Application tasks waits for recovery.
- Exception handling tasks/ or in the context of timeout recovery API is invoked. Recovery API performs certain operations are shown in the flow diagram.

After recovery All session state context is deleted, and application task is restarted

All information provided in this document is subject to legal disclaimers.
© 2026 NXP B.V. All rights reserved.

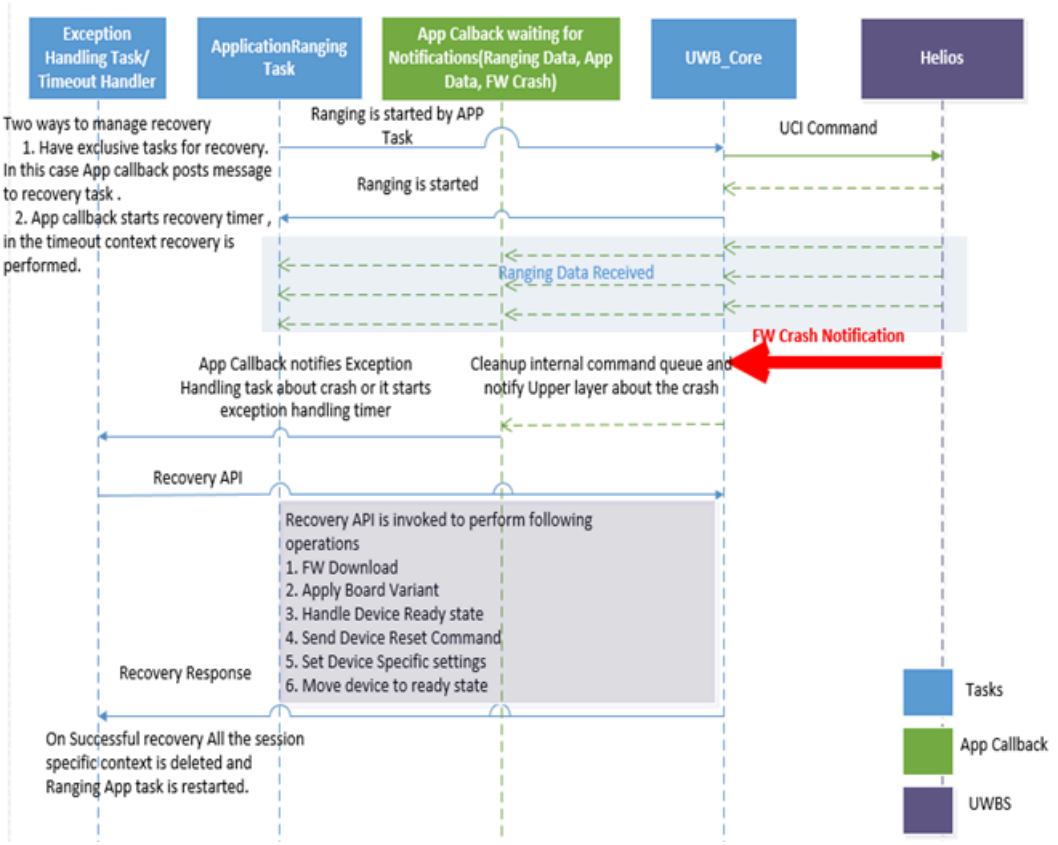

All information provided in this document is subject to legal disclaimers.

© 2026 NXP B.V. All rights reserved.

3 UWB Device

3.1 SR2XX

3.1.1 SR2XX SPI communication

This section shows SPI level handshake and communication with SR2XX under various scenarios. It can be used to understand how the underlying system communication is handled.

3.1.1.1 HDLL SPI Write

This timing diagram shows HDLL Write handshake and sequence to SR2XX.

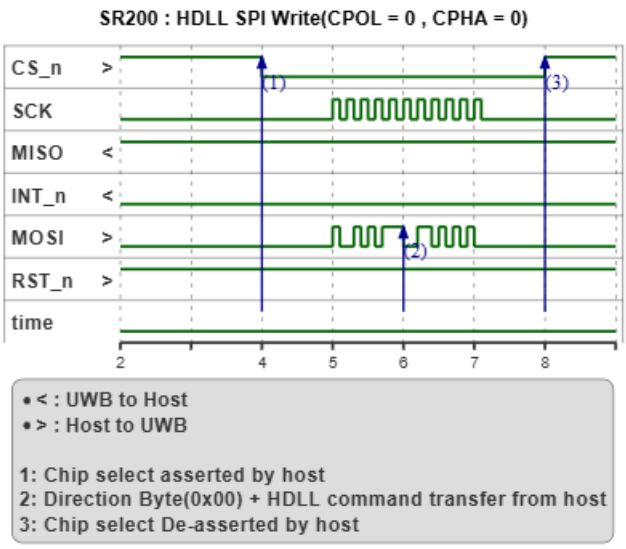

3.1.1.2 HDLL SPI Read

This timing diagram shows HDLL Read handshake and sequence to SR2XX.

All information provided in this document is subject to legal disclaimers.
© 2026 NXP B.V. All rights reserved.

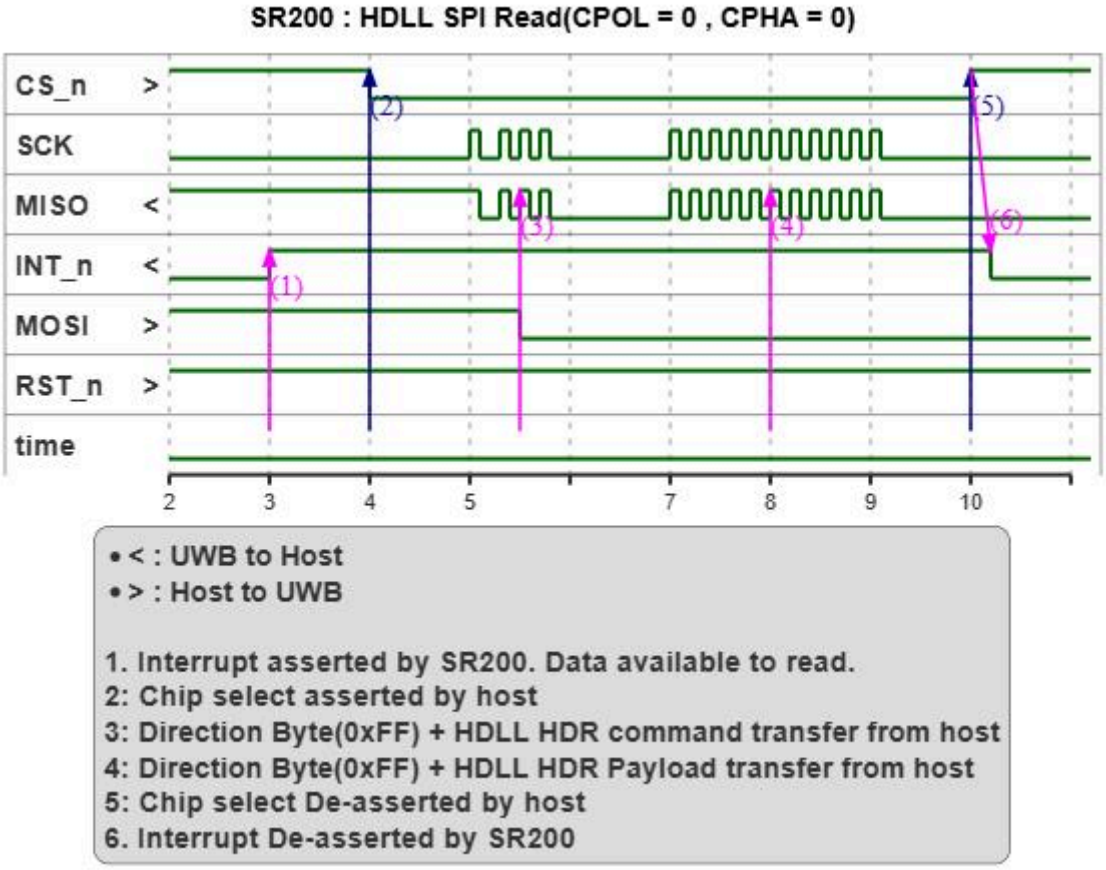

Note:

Host can write data even After SR2XX has rsp/ntf to send-out (Interrupt pin Asserted)

3.1.1.3 SPI Write

This timing diagram shows UCI Write handshake and sequence to SR2XX.

All information provided in this document is subject to legal disclaimers.
© 2026 NXP B.V. All rights reserved.

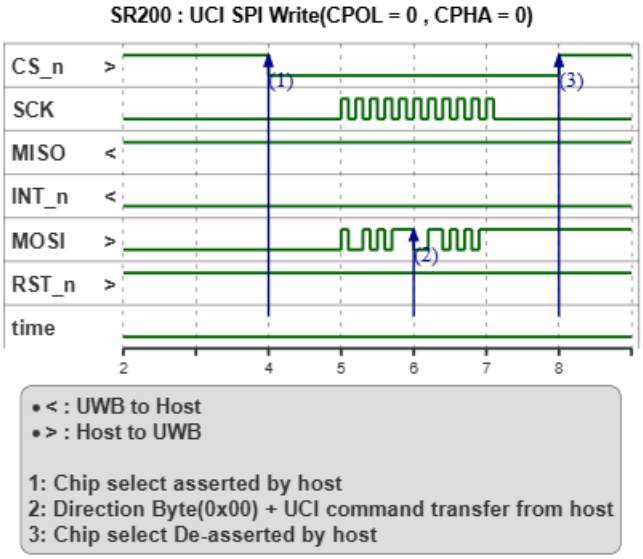

3.1.1.4 SPI Read

This timing diagram shows UCI Read handshake and sequence from SR2XX.

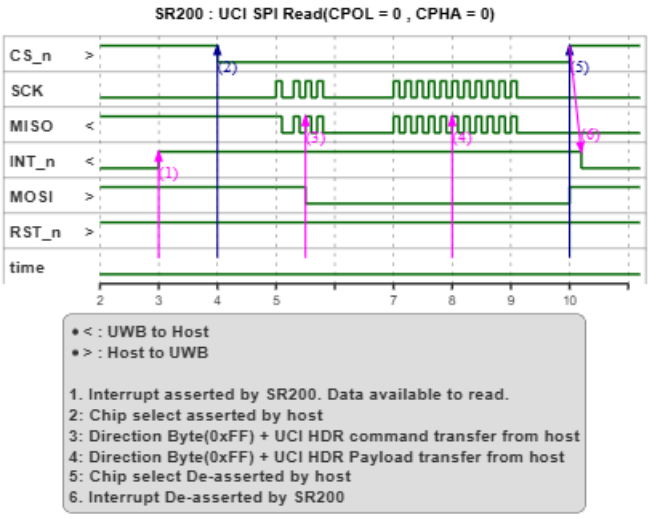

Note:

Host can write data even After SR2XX has rsp/ntf to send-out (Interrupt pin Asserted)

All information provided in this document is subject to legal disclaimers.

© 2026 NXP B.V. All rights reserved.

3.1.2 HDLL

SR2XX has a HDLL (Host Data Link Layer) mode, based on HDLL protocol. By default the IC bootup in HDLL mode. As SR2XX is FLASH based so no need to Download FW every boot. To download FW HDLL host interface protocol is used.

3.1.2.1 SR2XX FW download Flow

Given below is the SR2XX FW download sequence diagram.

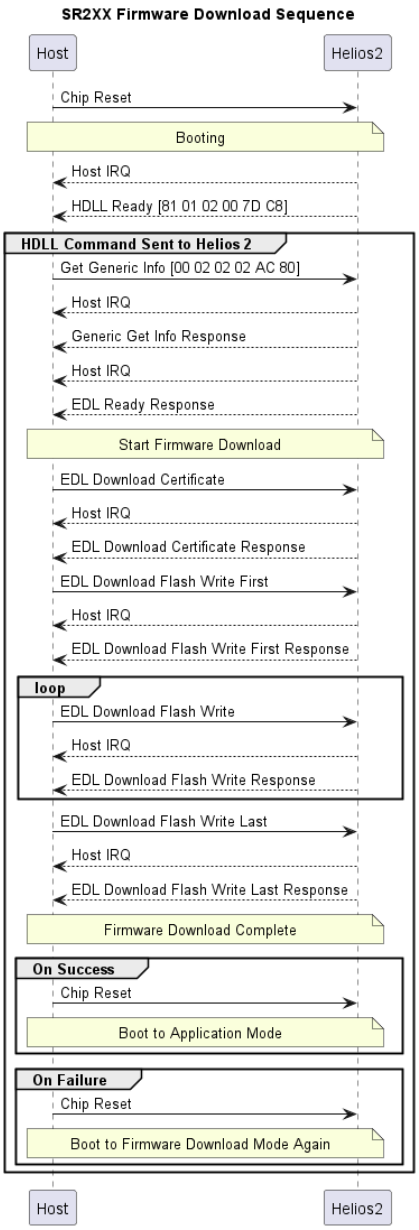

All information provided in this document is subject to legal disclaimers.
© 2026 NXP B.V. All rights reserved.

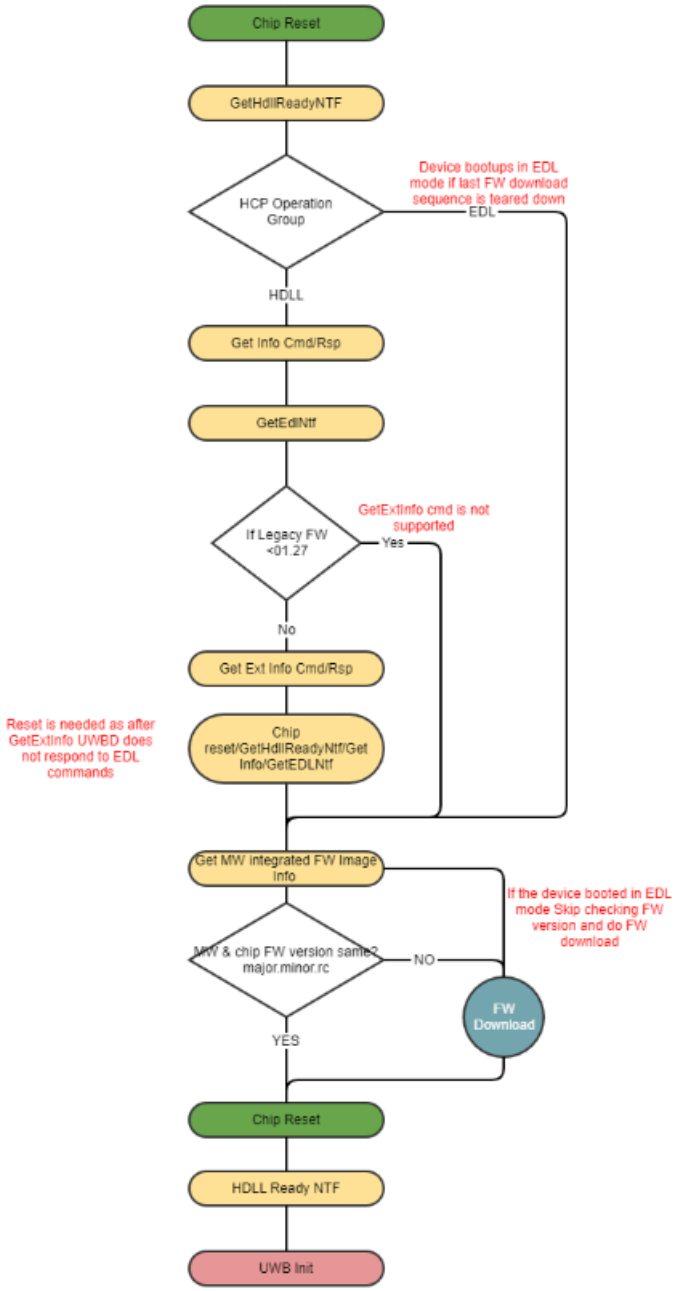

Note:

SR2XX goes into UCI mode after ~50ms of reset

All information provided in this document is subject to legal disclaimers.

© 2026 NXP B.V. All rights reserved.

4 Projects

4.1 MCUXpresso IDE Projects

4.1.1 FRDM_RW612-SR250 Standalone MCUXpresso Project

The FRDM_RW612-SR250 application can be build and deploy using `frdmrw612_sr250` MCUXpresso project .

4.1.1.1 Demo Application

Below demo applications are part of this project

1. Demo FW update
2. Demo Ranging Controlee
3. Demo Ranging Controller
4. SR250 Radar
5. SR250 ON Chip Presence Detection
6. Demo nearby interaction
7. Demo Device Calibration
8. FRDM_RW612 Plug-n-Play FW

4.1.1.2 Prerequisites

- Requires MCUXpresso IDE v11.9.0 or later

4.1.1.3 How to Build Demo Application

For compiling any of above demo application one need to enable specific demo from `UWBIOT_APP_BUILD.h` file

Note:

only one demo application can be build & deploy at a time.

All information provided in this document is subject to legal disclaimers.
© 2026 NXP B.V. All rights reserved.

5 Demos

5.1 SR250 Demos with FRDM RW612 host

5.1.1 Demo List SR250 with FRDM RW612

5.1.1.1 Standalone C Examples for SR250 with FRDM_RW612 board

These examples are supported for FRDM-RW612

Table 2. Demo Firmware Update

Demo	Description
Demo FW update	This demo ensures that the UWB device firmware is up-to-date. It checks the current firmware version on the chip against the version in the middleware binary. If an update is required, it downloads the new firmware, initializes the MW stack, and retrieves device information.

Table 3. UWB Ranging Demos

Demo	Description
Demo Ranging Controlee	This demo showcases normal ranging with one device configured as a Controlee - Responder and another device configured as a Controller - Initiator [Another demo].
Demo Ranging Controller	This demo showcases normal ranging with one device configured as a Controller - Initiator and another device configured as a Controlee - Responder [Another demo].

Table 4. Radar Demos

Demo	Description
SR250 Radar	This demo showcases normal Radar with SR250 device • NOTE : Application/Demo needs to allocate the memory for CIR Data. • NOTE : Make sure while configuration in ccmake UWBFTR_RADAR is ON
SR250 ON Chip Presence Detection	1. This demo showcases the Presence detection with SR250. 2. Radar Mode configured as Medium distance used for Presence detection. 3. Radar distance Range for Presnece detecion is 3m to 8m. 1. By default settings for the different conifurations for the OCPD . 2. To change any settings update the below macros in `demo_ocpd.c`, at location `demos/radar/demo_ocpd`. • `#define PRESENCE_DETECTION_MODE_ENABLE 0x03 (Enabled both Presence and Radar Detection Mode)` • `#define PRESENCE_DETECTION_PERIODIC_DATA_REPORT 0x04 (Disabled to send CIRs to Host with PD Distance and presence reporting every 400 msec)` • `#define PRESENCE_DETECTION_ENABLE_IRQ 0x00 (Enable/Disable the IRQ and RADAR_RX_NTF)` • `#define PRESENCE_DETECTION_SENSITIVITY_VALUE 3.75 (Default Sensitivity)` • `#define PRESENCE_DETECTION_DISTANCE_MIN 30 (30cm Distance supported)`

All information provided in this document is subject to legal disclaimers.
© 2026 NXP B.V. All rights reserved.

Table 4. Radar Demos...*continued*

Demo	Description
	• `#define MIN_PRESENCE_DETECTION_DISTANCE_MAX 200 (2m Distance supported)` • `#define MIN_PRESENCE_DETECTION_HOLD_DELAY 1600 (Default Hold Sensitivity)` • `#define MIN_PRESENCE_DETECTION_ANGLE -90 (Minimum AoA supports)` • `#define MAX_PRESENCE_DETECTION_ANGLE +90 (Maximum AoA supports)` ***Note:*** *Application/Demo needs to allocate the memory for CIR Data. Make sure while configuration in cmake UWBFTR_RADAR is ON.*

Table 5. BLE Demos

Demo	Description
Demo nearby interaction	This demo showcases ranging via Bluetooth LE ™ with background(pairing) feature with SR250 configured as a either Controller - Initiator or Controlee - Responder.

Table 6. Device Calibration Demo

Demo	Description
Demo Device Calibration	This demo showcases setting of device calibration into the flash. This demo is added to support during Customer or before life cycle. ***Warning:*** *This demo is not applicable in "Protected" life cycle.*

Table 7. Plug and Play Firmware

Demo	Description
FRDM_RW612 Plug-n-Play FW	This firmware enables PC applications to run over the FRDM_RW612 board. The FRDM_RW612 board runs the PnP firmware, which acts as a bridge between PC applications and the SR250 chip. PC applications send commands over UART to the PnP firmware, which forwards them to the SR250 and relays responses and notifications back to the PC.

5.1.2 Demo FW update

5.1.2.1 Running SR2xx Firmware Download

This demo ensures that the UWB device firmware is up-to-date. It checks the current firmware version on the chip against the version in the middleware binary. If an update is required, it downloads the new firmware, initializes the MW stack, and retrieves device information.

5.1.2.1.1 Firmware Update Scenarios

The firmware update logic handles different scenarios based on the `forceFwUpdate` flag and the presence of firmware context structure `phUwbFWImageContext_t`.

All information provided in this document is subject to legal disclaimers.
© 2026 NXP B.V. All rights reserved.

1. **Force Firmware Enabled, Firmware Context Not Passed**
   - The API returns a failure.
   - **Error Message**: “Cannot enable force firmware download without passing the firmware context.”
2. **Force Firmware Enabled, Firmware Context Passed**
   - Firmware is updated unconditionally.
   - No version check is performed.
3. **Force Firmware Disabled, Firmware Context Passed**
   - Firmware version is checked.
   - If the version mismatches, the firmware is updated.
4. **Force Firmware Disabled, Firmware Context Not Passed**
   - Firmware version is checked using hardcoded macros.
   - The API returns a failure due to missing firmware context.

Note:

When integrating the firmware, users must update the following version macros in the `Mainline_Firmware.h` *header file located in the binaries path* `uwbiot-top/firmware_images/SR2XX/`

- `#define UWB_SR2XX_MAJOR_NUMBER 0xXX`
- `#define UWB_SR2XX_MINOR_NUMBER 0xXX`
- `#define UWB_SR2XX_PATCH_NUMBER 0xXX`

*These macros define the expected firmware version and are essential for ensuring compatibility between the middleware (MW) and the firmware (FW). If the firmware has already been updated and the user does **not** wish to re-download it every time, the firmware context can be skipped during initialization.However, in such cases, these macros **must** be correctly updated to reflect the actual firmware version present on the device. Failure to do so will result in a version mismatch error, as the system will detect incompatibility between MW and FW versions.*

5.1.2.1.1.1 How to Build

- For Zephyr based platform, refer the **Build Demo Application** section from **Getting_started guide**
- Source: `demo_sr2xx_fw_update`

5.1.2.1.1.2 How to Run

Steps to be followed to run:

- For Zephyr RTOS based device, flash the `demo_sr2xx_fw_update.bin` file.

5.1.2.1.1.3 Log (Success)

At the end of program execution, log message like this must be seen:

```
##################################################
## demo_sr2xx_fw_download : SR250
## UWBIOT_v05.08.00
##################################################
TMLUWB  :WARN :SPI Frequency = 16000000
FWDNLD  :INFO :phNxpUciHal_fw_download enter.....
FWDNLD  :INFO :RECV                :00048101 02007DC8
FWDNLD  :INFO :RECV                :00048103 020013A8
FWDNLD  :INFO :RECV                :00048101 02007DC8
FWDNLD  :INFO :RECV                :00048103 020013A8
FWDNLD  :INFO :=====================GET_INFO =======================
```


All information provided in this document is subject to legal disclaimers. © 2026 NXP B.V. All rights reserved.

```
FWDNLD  :INFO : "Session Control Open"
FWDNLD  :INFO : "ROM Version A1V2"
FWDNLD  :INFO : "N-1/N-2 Page is OK"
FWDNLD  :INFO :FW Version: Major.Minor: 01.31
FWDNLD  :INFO : "Lifecycle Customer"
FWDNLD  :INFO :=====================GET_INFO_EXT =======================

FWDNLD  :INFO :Fw Rc version value: 0xC5

FWDNLD  :INFO :mw_fw_ver: 01.31 chip_fw_ver: 01.31
FWDNLD  :INFO :mw_fw_patch_ver: FF chip_fw_patch_ver: C5
FWDNLD  :INFO :Patch version Mismatch FW Update required
FWDNLD  :INFO :phLoadFwBinary() status - 0
FWDNLD  :INFO :phNxpUciHal_fw_download completed.....
FWDNLD  :INFO :RECV                :00048101 02007DC8
HALUCI  :RX < :RECV                :60010001 01
TMLUWB  :TX > :SEND                :2E000002 0000
HALUCI  :RX < :RECV                :60070001 0A
TMLUWB  :TX > :SEND                :2E000002 0000
HALUCI  :RX < :RECV                :4E000001 00
HALUCI  :RX < :RECV                :60010001 01
TMLUWB  :TX > :SEND                :20000001 00
HALUCI  :RX < :RECV                :60070001 0A
TMLUWB  :TX > :SEND                :20000001 00
HALUCI  :RX < :RECV                :40000001 00
HALUCI  :RX < :RECV                :60010001 01
TMLUWB  :TX > :SEND                :20040012 03E40201 00E40402 F401E43A 0500E803
 E803
HALUCI  :RX < :RECV                :6E060001 02
UWBAPI  :WARN :processProprietaryNtf: unhandled oid 0x6
HALUCI  :RX < :RECV                :40040002 0000
TMLUWB  :TX > :SEND                :2004003D 03E46019 04010103 00030002 02030003
 00030303 00030004 04000000 00E4630D 02010100 00000002 02030003 00E4620D
 02010102 00000002 00020300 00
HALUCI  :RX < :RECV                :40040002 0000
TMLUWB  :TX > :SEND                :20040004 01010101
HALUCI  :RX < :RECV                :40040002 0000
TMLUWB  :TX > :SEND                :20040006 01E40402 F401
HALUCI  :RX < :RECV                :40040002 0000
TMLUWB  :TX > :SEND                :20040005 01E43301 01
HALUCI  :RX < :RECV                :40040002 0000
TMLUWB  :TX > :SEND                :20030000
HALUCI  :RX < :RECV                :40030093 00280002 F7070102 F7070204 01000200
 03040100 02000401 0B0502AF 0006027F 0607011F 08010709 01020A01 070B0101
 0C01010D 01010E01 090F010B 10010311 013F1205 AFAAAAAA 0113010F 14010015
 01011601 0317010A 18010019 01001A01 001B020D 551C0101 A0017FA1 04000F00
 00A2011F A30103A4 020001A5 04000001 00A60300 1122A701 01B10200 08B201AE B3010C
TMLUWB  :TX > :SEND                :20020000
HALUCI  :RX < :RECV                :4002007C 00030002 00020002 0072000F 53523235
 305F4131 56325F50 524F4401 030131FF 02030200 23031054 4E334132 32303944
 35A20127 00370004 01640502 00000604 A5A5A5A5 60030300 00610303 00006211
 62383963 33346637 37323566 37643038 2D630101 A0020203 A108312E 302E3000
 0000A208 302E372E 35000000
APP     :INFO :Device Name                    : SR250_A1V2_PROD

APP     :INFO :Firmware Version               : 01.31.FF

APP     :INFO :Finished C:uwbiot-top/demos/SR2XX/demo_sr2xx_fw_update/
demo_sr2xx_fw_update.c : Success!
```


All information provided in this document is subject to legal disclaimers.
© 2026 NXP B.V. All rights reserved.

If such a log is not seen, re-run the program.

5.1.3 Demo Ranging Controlee

This demo showcases normal ranging with one device configured as a Controlee - Responder and another device configured as a Controller - Initiator [Another demo].

Following sequence of steps are handled.

- Initialize UWBD in Mainline Firmware.
- Set the application ranging parameters
- Perform normal ranging with static STS.

5.1.3.1 How to Build

- For Zephyr based platform, refer the **Build Demo Application** section from **Getting_started guide**
- Source: `demo_ranging_controlee.c`

5.1.3.2 How to Run

Steps to be followed to run:

- For Zephyr RTOS based device, flash the `demo_ranging_controlee.bin` file.
- Run Demo Ranging Controller on counterpart for normal ranging.

5.1.3.3 Log (Success)

At the end of program execution, log message like this must be seen:

```
TMLUWB  :RX < :RECV                :62000055 2B010000 01000000 00C80000 ..
 308DD080 D0
TMLUWB  :TX > :SEND                :22010004 01000000
TMLUWB  :RX < :RECV                :60070001 0A
TMLUWB  :RX < :RECV                :62000055 2C010000 01000000 00C80000 ..
 3070D080 D0
UCICORE :WARN :Retrying last failed command
TMLUWB  :TX > :SEND                :22010004 01000000
TMLUWB  :RX < :RECV                :42010001 00
TMLUWB  :RX < :RECV                :61020006 01000000 0300
TMLUWB  :TX > :SEND                :21010004 01000000
TMLUWB  :RX < :RECV                :60010001 01
TMLUWB  :RX < :RECV                :41010001 00
TMLUWB  :RX < :RECV                :61020006 01000000 0100
APP     :INFO :Finished <Project_Path>/uwbiot-top/demos/common/
demo_ranging_controlee/demo_ranging_controlee.c : Success!
```

If such a log is not seen, re-run the program.

5.1.4 Demo Ranging Controller

This demo showcases normal ranging with one device configured as a Controller - Initiator and another device configured as a Controlee - Responder [Another demo].

Following sequence of steps are handled.

- Initialize UWBD in Mainline Firmware.

All information provided in this document is subject to legal disclaimers.
© 2026 NXP B.V. All rights reserved.

- Set the application ranging parameters
- Perform normal ranging with static STS.

5.1.4.1 How to Build

- For Zephyr based platform, refer the **Build Demo Application** section from **Getting_started guide**
- Source: `demo_ranging_controller.c`

5.1.4.2 How to Run

Steps to be followed to run:

- For Zephyr RTOS based device, flash the `demo_ranging_controller.bin` file.
- Run Demo Ranging Controlee on counterpart for normal ranging.

5.1.4.3 Log (Success)

At the end of program execution, log message like this must be seen:

```
TMLUWB  :RX < :RECV                :62000055 2E010000 01000000 .. 309BD080 D0
TMLUWB  :RX < :RECV                :62000055 2F010000 01000000 .. 00000000 00
UCICORE :WARN :Retrying last failed command
TMLUWB  :TX > :SEND                :22010004 01000000
TMLUWB  :RX < :RECV                :42010001 00
TMLUWB  :RX < :RECV                :62000055 30010000 01000000 .. 00000000 00
TMLUWB  :RX < :RECV                :61020006 01000000 0300
TMLUWB  :TX > :SEND                :21010004 01000000
TMLUWB  :RX < :RECV                :60010001 01
TMLUWB  :RX < :RECV                :41010001 00
TMLUWB  :RX < :RECV                :61020006 01000000 0100
APP     :INFO :Finished <Project_Path>/uwbiot-top/demos/common/
demo_ranging_controller/demo_ranging_controller.c : Success!
```

If such a log is not seen, re-run the program.

5.1.5 SR250 Radar

This demo showcases normal Radar with SR250 device

- NOTE : Application/Demo needs to allocate the memory for CIR Data.
- NOTE : Make sure while configuration in ccmake UWBFTR_RADAR is ON

Following sequence of steps are handled.

- Initialize UWBD in Mainline Firmware.
- Set the application Radar parameters

5.1.5.1 How to Build

- Set Macro “USE_BARE_BOARD” to ‘0’ or ‘1’ depending upon the respective Host refer file *UWB_DeviceConfig.h* in `<TOP>/boards/Host/${UWBIOT_Host}/UWB_DeviceConfig.h`
- For Zephyr based platform, refer the **Build Demo Application** section from **Getting_started guide**
- Source: `demo_radar`

All information provided in this document is subject to legal disclaimers.
© 2026 NXP B.V. All rights reserved.

5.1.5.2 How to Run

Steps to be followed to run:

- For Zephyr RTOS based device, flash the `demo_radar.bin` file.

5.1.5.3 Log (Success)

At the end of program execution, log message like this must be seen:

```
TMLUWB  :RX < :RECV                :798A0008 44332211 00000400 80008504 0000E893
TMLUWB  :RX < :RECV                :690A000A C8F8F7FB FBFB66F7 F5FB
TMLUWB  :RX < :RECV                :798A0008 44332211 00000400 80008904 0000EC17
TMLUWB  :RX < :RECV                :690A000A C5F8F7FB FBFB64F7 F5FB
TMLUWB  :RX < :RECV                :798A0008 44332211 00000400 80008D04 0000E59B
TMLUWB  :RX < :RECV                :690A000A C5F8F7FB FBFB62F7 F5FB
TMLUWB  :TX > :SEND                :22010004 44332211
TMLUWB  :RX < :RECV                :42010001 00
TMLUWB  :RX < :RECV                :61020006 44332211 0300
TMLUWB  :TX > :SEND                :21010004 44332211
TMLUWB  :RX < :RECV                :60010001 01
TMLUWB  :RX < :RECV                :41010001 00
TMLUWB  :RX < :RECV                :61020006 44332211 0100

APP     :INFO :Finished <PROJECT_PATH>/uwbiot-top/demos/radar/demo_radar/
demo_radar.c : Success!
```

If such a log is not seen, re-run the program.

5.1.6 SR250 ON Chip Presence Detection

1. This demo showcases the Presence detection with SR250.
2. Radar Mode configured as Medium distance used for Presence detection.
3. Radar distance Range for Presnece detecion is 3m to 8m.

5.1.6.1 Default Configs

1. By default settings for the different conifurations for the OCPD .
2. To change any settings update the below macros in `demo_ocpd.c`, at location `demos/radar/demo_ocpd`
   .
   - `#define PRESENCE_DETECTION_MODE_ENABLE 0x03 (Enabled both Presence and Radar Detection Mode)`
   - `#define PRESENCE_DETECTION_PERIODIC_DATA_REPORT 0x04 (Disabled to send CIRs to Host with PD Distance and presence reporting every 400 msec)`
   - `#define PRESENCE_DETECTION_ENABLE_IRQ 0x00 (Enable/Disable the IRQ and RADAR_RX_NTF)`
   - `#define PRESENCE_DETECTION_SENSITIVITY_VALUE 3.75 (Default Sensitivity)`
   - `#define PRESENCE_DETECTION_DISTANCE_MIN 30 (30cm Distance supported)`
   - `#define MIN_PRESENCE_DETECTION_DISTANCE_MAX 200 (2m Distance supported)`
   - `#define MIN_PRESENCE_DETECTION_HOLD_DELAY 1600 (Default Hold Sensitivity)`
   - `#define MIN_PRESENCE_DETECTION_ANGLE -90 (Minimum AoA supports)`
   - `#define MAX_PRESENCE_DETECTION_ANGLE +90 (Maximum AoA supports)`

Note:

All information provided in this document is subject to legal disclaimers.
© 2026 NXP B.V. All rights reserved.

Application/Demo needs to allocate the memory for CIR Data. Make sure while configuration in cmake UWBFTR_RADAR is ON.

Following sequence of steps are handled.

- Initialize UWBD in Mainline Firmware.
- Set the application Radar parameters

5.1.6.1.1 How to Build

- Set Macro “USE_BARE_BOARD” to ‘0’ or ‘1’ depending upon the respective Host refer file *UWB_DeviceConfig.h* in `<TOP>/boards/Host/${UWBIOT_Host}/UWB_DeviceConfig.h`
- For Zephyr based platform, refer the **Build Demo Application** section from **Getting_started guide**
- Source: `demo_ocpd.c`

5.1.6.1.2 How to Run

Steps to be followed to run:

- For Zephyr RTOS based device, flash the `demo_ocpd.bin` file.

5.1.6.1.3 Log (Success)

At the end of program execution, log message like this must be seen:

```
HALUCI  :RX < :RECV                :798A0008 44332211 00000400 80008504 0000E893
HALUCI  :RX < :RECV                :690A000A C8F8F7FB FBFB66F7 F5FB
HALUCI  :RX < :RECV                :798A0008 44332211 00000400 80008904 0000EC17
HALUCI  :RX < :RECV                :690A000A C5F8F7FB FBFB64F7 F5FB
HALUCI  :RX < :RECV                :798A0008 44332211 00000400 80008D04 0000E59B
HALUCI  :RX < :RECV                :690A000A C5F8F7FB FBFB62F7 F5FB
HALUCI  :RX < :RECV                :690A0012 010000F0 00010100 00002D00 00004C2E
 0000
APP     :INFO :presence_detected          : 0x1
APP     :INFO :presence_distance          : 45
APP     :INFO :presence_detection_value   : 0x2e4
HALUCI  :TX > :SEND                :22010004 44332211
HALUCI  :RX < :RECV                :42010001 00
HALUCI  :RX < :RECV                :61020006 44332211 0300
HALUCI  :TX > :SEND                :21010004 44332211
HALUCI  :RX < :RECV                :60010001 01
HALUCI  :RX < :RECV                :41010001 00
HALUCI  :RX < :RECV                :61020006 44332211 0100

APP     :INFO :Finished <PROJECT_PATH>/uwbiot-top/demos/radar/demo_radar/
demo_ocpd.c : Success!
```

If such a log is not seen, re-run the program.

5.1.7 Demo nearby interaction

This demo showcases ranging via Bluetooth LE ™ with background(pairing) feature with SR250 configured as a either Controller - Initiator or Controlee - Responder.

For details on Peer-to-Peer ranging sequence and configuration details for SR250 refer to Peer-to-Peer ranging.

All information provided in this document is subject to legal disclaimers.
© 2026 NXP B.V. All rights reserved.

5.1.7.1 IOS

1. By default the UWB spec version is set to v1.1. To enable v1.0, we shall set the `UWB_IOS_SPEC_VERSION_MINOR` to `0x00, 0x00` in `UwbApi_types.h`.
2. By default the Bonding and pairing capability is disabled, To enable them we shall set the below macros to `1` in `app_preinclude.h`, at location
   `boards/Host/FRDM_RW612`
   `#define CONFIG_BT_PAIRING 1`
   Note:
   In case of pairing With an IOS device in debug mode, it has been observed that the after pairing we don't receive any BLE message. If the device is already paired, then there is no issue observed.

5.1.7.2 Android

1. By default the UWB spec version is set to v1.0 in `UwbApi_types.h`.

Note:

For multiple connection using ble, `CONFIG_BT_MAX_CONN` define needs to updated to max number of connections allowed in `app_preinclude.h`, at location `boards/Host/Virgo` by default it's defined to 5

5.1.7.3 App Ranging with Bluetooth LE ™ on Virgo-SR250/ FRDM_RW612-SR250

In this demo, a smartphone first asks to pair the UWB device, once paired it sends commands over Bluetooth LE ™ to Virgo/FRDM_RW612 to initialize and configure session and start ranging.

By Default the Low Power Mode is Enabled, To Disable the Low Power Mode we need to set the below macros as `0` inside

`uwbiot-top/boards/Host/FRDM_RW612/app_preinclude.h`

`#define APP_LOWPOWER_ENABLED 0`

For UWB and App developer specific changes refer `/*Define for App developer*/` & `/*Define for UWB developer*/` section in `TLV_Mng.c` file.

5.1.7.3.1 How to Build

Build the Bluetooth LE ™ based Ranging application for SR250 Using FRDM_RW612

- Source: `demo_nearby_interaction`
- For Zephyr based platform, refer the **Build Demo Application** section from **Getting_started guide**

5.1.7.3.2 How to Run

Steps to be followed to run:

- For Zephyr RTOS based device, flash the `demo_nearby_interaction.bin` file.

5.1.7.3.3 Flash BLE Firmware

This step needs to be done only once. This is used for flashing the BLE firmware to the module so that it can run any BLE applications.

- In MCUXpresso Click on the GUI Flash Tool icon and select the BLE firmware `uwbiot-top/ext/boards/RW612/components/conn_fwloader/fw_bin/rw61x_sb_ble_a2.bin`.
- Change the base address from "0x8000000" to "0x8540000".

All information provided in this document is subject to legal disclaimers.
© 2026 NXP B.V. All rights reserved.

- click on `Run`

5.1.7.3.4 SR250 configuration

According to specification here are the configuration that can be changed:

- `TLV_Types_i.h` - DEVICE_ROLE:

```
#define DEMO_DEVICE_TYPE kUWB_DeviceType_Controller     // Configure accessory
 as Controller
#define DEMO_DEVICE_ROLE kUWB_DeviceRole_Initiator      // Configure accessory
 as Initiator
// #define DEMO_DEVICE_TYPE kUWB_DeviceType_Controlee   // Configure accessory
 as Controlee
// #define DEMO_DEVICE_ROLE kUWB_DeviceRole_Responder   // Configure accessory
 as Responder
```

- `TLV_Mng.c`:

```
uint8_t SpecMajorVersion[2] = {0x01, 0x00};                // Spec major
 version
uint8_t SpecMinorVersion[2] = {0x01, 0x00};                // Spec minor
 version
configData.PreferedUpdateRate                              // Prefered Update
 data rate (use PreferedUpdateRate_t definition)
```


All information provided in this document is subject to legal disclaimers.
© 2026 NXP B.V. All rights reserved.

5.1.7.3.5 Sequence Diagram

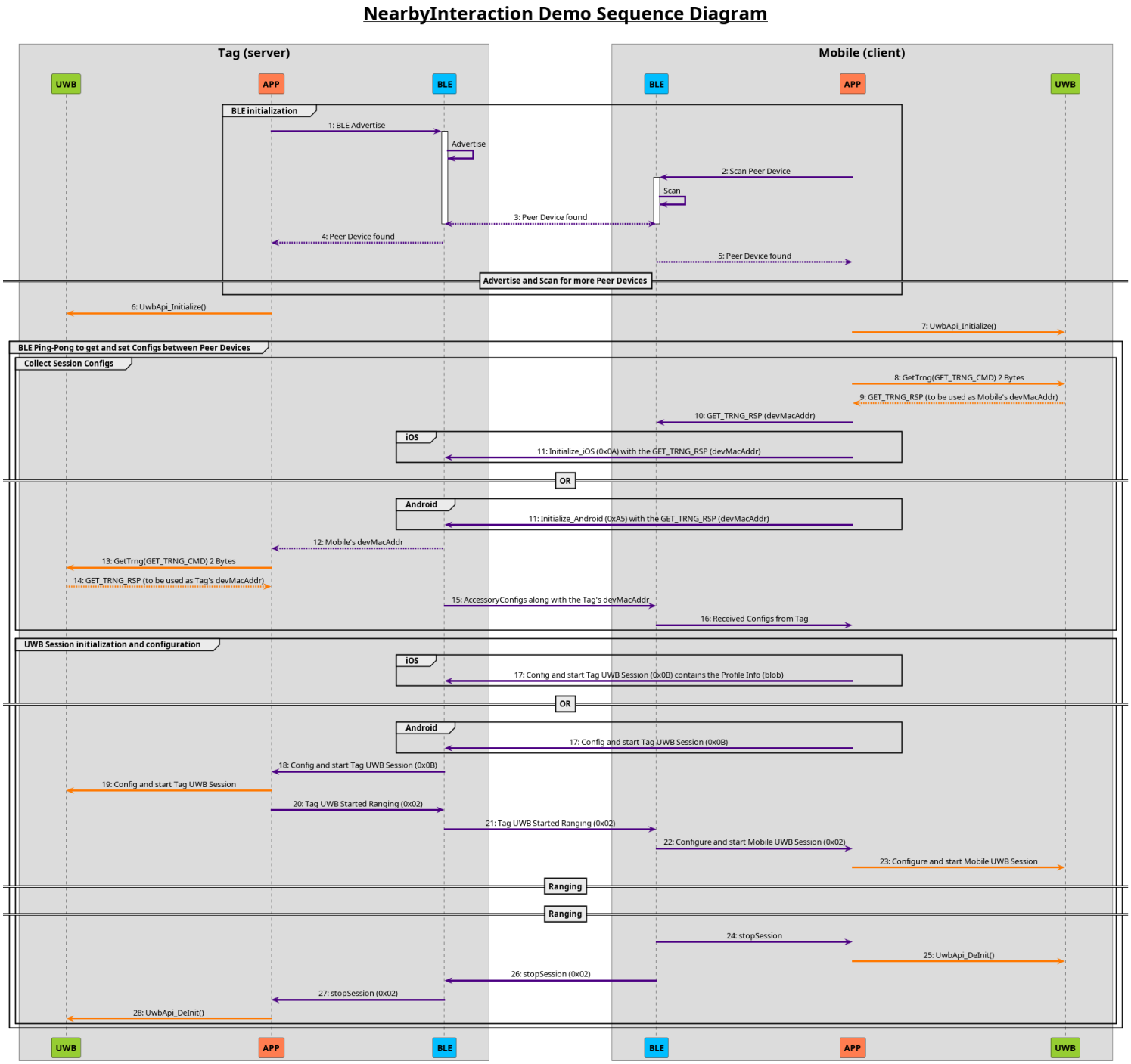

All information provided in this document is subject to legal disclaimers.
© 2026 NXP B.V. All rights reserved.

5.1.7.3.6 Log (Success)

After program execution, log message like this must be seen:

```
##################################################
## Demo Nearby Interaction (BLE tracker) : SR250
## UWBIOT_v05.00.01
##################################################
APP     :WARN :device init
TMLUWB  :WARN :SPI Frequency = 16000000
FWDNLD  :INFO :phNxpUciHal_fw_download enter.....
FWDNLD  :INFO :RECV                :00048101 02007DC8
FWDNLD  :INFO :RECV                :00048103 020013A8
FWDNLD  :INFO :RECV                :00048101 02007DC8
FWDNLD  :INFO :RECV                :00048103 020013A8
FWDNLD  :INFO :=====================GET_INFO =======================
FWDNLD  :INFO : "Session Control Open"
FWDNLD  :INFO : "ROM Version A1V2"
FWDNLD  :INFO : "N-1/N-2 Page is OK"
FWDNLD  :INFO :FW Version: Major.Minor: 01.28
FWDNLD  :INFO : "Lifecycle Customer"
FWDNLD  :INFO :=====================GET_INFO_EXT =======================

FWDNLD  :INFO :Fw Rc version value: 0xFE

FWDNLD  :INFO :mw_fw_ver: 01.28 chip_fw_ver: 01.28
FWDNLD  :INFO :mw_fw_patch_ver: FE chip_fw_patch_ver: FE
FWDNLD  :INFO :FW Update not required
FWDNLD  :INFO :Same FW version found skipping FW download
FWDNLD  :INFO :RECV                :00048101 02007DC8
HALUCI  :RX < :RECV                :60010001 01
TMLUWB  :TX > :SEND                :2E000002 0000
HALUCI  :WARN :hal_extns_write_rsp_timeout_cb - write timeout!!!
TMLUWB  :TX > :SEND                :2E000002 0000
HALUCI  :RX < :RECV                :60070001 0A
TMLUWB  :TX > :SEND                :2E000002 0000
HALUCI  :RX < :RECV                :4E000001 00
HALUCI  :RX < :RECV                :60010001 01
TMLUWB  :TX > :SEND                :20000001 00
HALUCI  :WARN :hal_extns_write_rsp_timeout_cb - write timeout!!!
TMLUWB  :TX > :SEND                :20000001 00
HALUCI  :RX < :RECV                :60070001 0A
TMLUWB  :TX > :SEND                :20000001 00
HALUCI  :RX < :RECV                :40000001 00
HALUCI  :RX < :RECV                :60010001 01
TMLUWB  :TX > :SEND                :20040058 07E40201 00E40301 B4E40402 F401E460
 1F050104 00000000 02030000 00000302 00000000 04010200 00000501 02000200
 E4620D02 01000302 00000204 00020000 E4630D02 01010000 00000202 00000000
 E43A0500 E803E803
HALUCI  :RX < :RECV                :6E060001 02
UWBAPI  :WARN :handle_binding_status_ntf: Binding Status : 2
HALUCI  :RX < :RECV                :40040002 0000
TMLUWB  :TX > :SEND                :2F210013 05021005 01EE4702 0E4803FD 47040748
 052648
HALUCI  :RX < :RECV                :4F210001 00
TMLUWB  :TX > :SEND                :2F210013 09021005 01F24702 DA470310 48041F48
 051348
HALUCI  :RX < :RECV                :4F210001 00
TMLUWB  :TX > :SEND                :20040004 01010101
HALUCI  :RX < :RECV                :40040002 0000
```


All information provided in this document is subject to legal disclaimers.
© 2026 NXP B.V. All rights reserved.

```
TMLUWB  :TX > :SEND                :20040006 01E40402 F401
HALUCI  :RX < :RECV                :40040002 0000
TMLUWB  :TX > :SEND                :20040005 01E43301 01
HALUCI  :RX < :RECV                :40040002 0000
TMLUWB  :TX > :SEND                :20030000
HALUCI  :RX < :RECV                :4003008A 00250002 F7070102 F7070204 01000200
 03040100 02000401 030502AF 0006027F 0007011F 08010309 01020A01 070B0101
 0C01010D 01010E01 090F010B 10010311 013F1205 FFFFFF7F 0013010F 14010115
 01011601 0317010A 18010019 01001A01 00A0017F A104000F 0000A201 F8A30103
 A4020001 A5020100 A6030011 22E30002 0008E301 01AEE302 010C
APP     :INFO :BLE Connected to peer: 52:39:11:AA:39:51 (random), 1 peers
 connected
APP     :INFO :Security changed: 52:39:11:AA:39:51 (random) level 2 (error 0)
TMLUWB  :TX > :SEND                :2F020000
HALUCI  :RX < :RECV                :60070001 0A
UCICORE :WARN :Retrying last sent command as FW asked for retry
 (CORE_GENERIC_ERROR_NTF -> STATUS_MESSAGE_RETRY)
TMLUWB  :TX > :SEND                :2F020000
HALUCI  :RX < :RECV                :4F020002 0000
TMLUWB  :TX > :SEND                :20020000
HALUCI  :RX < :RECV                :40020072 00020002 00020002 0068000F 53523235
 305F4131 56325F50 524F4401 030128FE 02030200 11031054 4E334132 32303944
 35A2011D 00300004 01640502 00000604 A5A5A5A5 60030200 00610302 00006211
 61376338 32333132 33323932 39393932 2D630101 A0020203 A108312E 302E3000 0000
TMLUWB  :TX > :SEND                :2A020001 02
HALUCI  :RX < :RECV                :4A020003 009E36
APP     :INFO :mac addr :          :9E36
TMLUWB  :TX > :SEND                :21000005 4AB1D7BF 00
HALUCI  :RX < :RECV                :41000005 00010000 00
HALUCI  :RX < :RECV                :61020006 01000000 0000
TMLUWB  :TX > :SEND                :2103002B 01000000 090904F0 00000008 0260091B
 01062806 01020304 05062702 08071401 0A040109 05010107 021122
HALUCI  :RX < :RECV                :41030002 0000
TMLUWB  :TX > :SEND                :2103001B 01000000 07110100 03010026 01002201
 0106029E 36010102 000100
HALUCI  :RX < :RECV                :41030002 0000
HALUCI  :RX < :RECV                :61020006 01000000 0300
TMLUWB  :TX > :SEND                :22000004 01000000
HALUCI  :RX < :RECV                :42000001 00
HALUCI  :RX < :RECV                :60010001 02
HALUCI  :RX < :RECV                :61020006 01000000 0200
HALUCI  :RX < :RECV                :62000048 00000000 01000000 00F00000 00010000
 00000000 00000000 01112221 00FFFF00 00000000 00000000 00000000 00000000
 00000000 00000000 0E000000 00010100 01010000 00000000
HALUCI  :RX < :RECV                :62000048 01000000 01000000 00F00000 00010000
 00000000 00000000 01112221 00FFFF00 00000000 00000000 00000000 00000000
 00000000 00000000 0E000000 00010100 01010000 00000000
HALUCI  :RX < :RECV                :62000048 02000000 01000000 00F00000 00010000
 00000000 00000000 01112221 00FFFF00 00000000 00000000 00000000 00000000
 00000000 00000000 0E000000 00010100 01010000 00000000
.
.
HALUCI  :RX < :RECV                :62000048 03000000 01000000 00F00000 00010000
 00000000 00000000 01112221 00FFFF00 00000000 00000000 00000000 00000000
 00000000 00000000 0E000000 00010100 01010000 00000000
TMLUWB  :TX > :SEND                :22010004 01000000
HALUCI  :RX < :RECV                :42010001 00
HALUCI  :RX < :RECV                :61020006 01000000 0300
TMLUWB  :TX > :SEND                :21010004 01000000
HALUCI  :RX < :RECV                :60010001 01
```


All information provided in this document is subject to legal disclaimers.
© 2026 NXP B.V. All rights reserved.

```
HALUCI   :RX < :RECV                :41010001 00
HALUCI   :RX < :RECV                :61020006 01000000 0100
APP      :INFO :BLE Disconnected peer 52:39:11:AA:39:51 (random), 0 peers
 connected

APP      :WARN :device deinit
APP      :INFO :BLE Disconnected (reason 19)
```

If such a log is not seen, re-run the program.

5.1.8 Demo Device Calibration

This demo showcases setting of device calibration into the flash.

This demo is added to support during Customer or before life cycle.

Warning:

This demo is not applicable in "Protected" life cycle.

The demo sets a predefined calibration parameters using UwbApi_SetCalibration and validates if the set values by calling the UwbApi_GetCalibration(). Following sequence of steps are handled.

- Initialize UWBD in Mainline Firmware
- Sets the predefined calibration values by calling UwbApi_SetCalibration().
- Gets the calibration values by calling UwbApi_GetCalibration().
- Validates both the calibration values.

Note:

During the MW Init, Default Calibration will not execute.

5.1.8.1 Host-Specific Calibration

The calibration values are host-specific and loaded from host-scoped files:

- Calibration File:`uwbiot-top/boards/Host/nxp/frdm_rw612/include/UWB_DeviceCalib_values.h`
- Applies calibration to **Channel 9 only**

5.1.8.2 Updating Calibration Values

To update or customize calibration values:

1. **Identify your host type**
2. **Locate the calibration file:**
   - Calibration File:`uwbiot-top/boards/Host/nxp/frdm_rw612/include/UWB_DeviceCalib_values.h`
   - Applies calibration to **Channel 9 only**
3. **Edit the calibration parameters** in the respective file
4. **Rebuild the demo** after making changes

5.1.8.3 How to Build

- For Zephyr based platform, refer the **Build Demo Application** section from **Getting_started guide**
- Source: `demo_device_calibration`

All information provided in this document is subject to legal disclaimers.
© 2026 NXP B.V. All rights reserved.

5.1.8.4 How to Run

Steps to be followed to run:

- For Zephyr RTOS based device, flash the `demo_device_calibration.bin` file.

5.1.8.5 Log (Success)

At the end of program execution, log message like this must be seen:

```
##################################################
## Demo Device Calibration : SR250
## UWBIOT_v05.08.00
##################################################
FWDNLD  :INFO :phNxpUciHal_fw_download enter.....
FWDNLD  :INFO :RECV                :00048101 02007DC8
FWDNLD  :INFO :RECV                :00048103 020013A8
FWDNLD  :INFO :RECV                :00048101 02007DC8
FWDNLD  :INFO :RECV                :00048103 020013A8
FWDNLD  :INFO :====================GET_INFO =======================
FWDNLD  :INFO : "Session Control Open"
FWDNLD  :INFO : "ROM Version A1V2"
FWDNLD  :INFO : "N-1/N-2 Page is OK"
FWDNLD  :INFO :FW Version: Major.Minor: 01.31
FWDNLD  :INFO : "Lifecycle Customer"
FWDNLD  :INFO :=====================GET_INFO_EXT =======================

FWDNLD  :INFO :Fw Rc version value: 0xC5

FWDNLD  :INFO :mw_fw_ver: 01.31 chip_fw_ver: 01.31
FWDNLD  :INFO :mw_fw_patch_ver: C5 chip_fw_patch_ver: C5
FWDNLD  :INFO :FW Update not required
FWDNLD  :INFO :Same FW version found skipping FW download
FWDNLD  :INFO :phNxpUciHal_fw_download completed.....
FWDNLD  :INFO :RECV                :00048101 02007DC8
HALUCI  :RX < :RECV                :60010001 01
TMLUWB  :TX > :SEND                :2E000002 0000
HALUCI  :RX < :RECV                :60070001 0A
TMLUWB  :TX > :SEND                :2E000002 0000
HALUCI  :RX < :RECV                :4E000001 00
HALUCI  :RX < :RECV                :60010001 01
TMLUWB  :TX > :SEND                :20000001 00
HALUCI  :RX < :RECV                :60070001 0A
TMLUWB  :TX > :SEND                :20000001 00
HALUCI  :RX < :RECV                :40000001 00
HALUCI  :RX < :RECV                :60010001 01
TMLUWB  :TX > :SEND                :20040012 03E40201 00E40402 F401E43A 0500E803
 E800
HALUCI  :RX < :RECV                :6E060001 02
UWBAPI  :WARN :processProprietaryNtf: unhandled oid 0x6
HALUCI  :RX < :RECV                :40040002 0000
TMLUWB  :TX > :SEND                :2004003D 03E46019 04010103 00030002 02030003
 00030303 00030004 04000000 00E4630D 02010100 00000002 02030003 00E4620D
 02010102 00000002 00020300 00
HALUCI  :RX < :RECV                :40040002 0000
TMLUWB  :TX > :SEND                :20040004 01010100
HALUCI  :RX < :RECV                :40040002 0000
TMLUWB  :TX > :SEND                :20040006 01E40402 F400
HALUCI  :RX < :RECV                :40040002 0000
TMLUWB  :TX > :SEND                :20040005 01E43301 00
```


All information provided in this document is subject to legal disclaimers. © 2026 NXP B.V. All rights reserved.

```
HALUCI  :RX < :RECV                :40040002 0000
TMLUWB  :TX > :SEND                :20030000
HALUCI  :RX < :RECV                :40030093 00280002 F7070102 F7070204 01000200
 03040100 02000401 0B0502AF 0006027F 0607011F 08010709 01020A01 070B0101
 0C01010D 01010E01 090F010B 10010311 013F1205 AFAAAAAA 0113010F 14010015
 01011601 0317010A 18010019 01001A01 001B020D 551C0101 A0017FA1 04000F00
 00A2011F A30103A4 020001A5 04000001 00A60300 1122A701 01B10200 08B201AE B3010C
UWBAPI  :WARN :parseCapabilityInfo: unknown param Id 0xA0
UWBAPI  :WARN :parseCapabilityInfo: unknown param Id 0xA1
UWBAPI  :WARN :parseCapabilityInfo: unknown param Id 0xA2
UWBAPI  :WARN :parseCapabilityInfo: unknown param Id 0xA3
UWBAPI  :WARN :parseCapabilityInfo: unknown param Id 0xA4
UWBAPI  :WARN :parseCapabilityInfo: unknown param Id 0xA5
UWBAPI  :WARN :parseCapabilityInfo: unknown param Id 0xA6
UWBAPI  :WARN :parseCapabilityInfo: unknown param Id 0xA7
TMLUWB  :TX > :SEND                :20020000
HALUCI  :RX < :RECV                :4002007C 00030002 00020002 0072000F 53523235
 305F4131 56325F50 524F4401 030131C5 02030200 23031054 4E334132 32303944
 35A2011D 003B0004 01640502 00000604 A5A5A5A5 60030300 00610303 00006211
 63343861 65373263 34353033 61303234 2D630101 A0020203 A108312E 302E3000
 0000A208 302E372E 35000000
UWBAPI  :WARN :parseDeviceInfo: unknown param Id 0xA0
UWBAPI  :WARN :parseDeviceInfo: unknown param Id 0xA1
UWBAPI  :WARN :parseDeviceInfo: unknown param Id 0xA2
APP     :INFO :Device Name                   : SR250_A1V2_PROD

APP     :INFO :Firmware Version              : 01.31.C5

APP     :WARN :LifeCycle :0xA5A5A5A5

APP     :WARN :Setting : DEMO_RF_CLK_ACCURACY_CALIB
TMLUWB  :TX > :SEND                :2F21000A 00010703 25002500 0400
HALUCI  :RX < :RECV                :4F210001 00
APP     :WARN :Getting : DEMO_RF_CLK_ACCURACY_CALIB
TMLUWB  :TX > :SEND                :2F220002 0000
HALUCI  :RX < :RECV                :4F22000B 00010107 03250025 000400
APP     :WARN :Setting : DEMO_RX_ANT_DELAY_CALIB_CH5
TMLUWB  :TX > :SEND                :2F210010 05020D04 01784802 72480376 48046900
HALUCI  :RX < :RECV                :4F210001 00
APP     :WARN :Getting : DEMO_RX_ANT_DELAY_CALIB_CH5
TMLUWB  :TX > :SEND                :2F220002 0500
HALUCI  :RX < :RECV                :4F220011 0003020D 04017848 02724803 76480469
 48
APP     :WARN :Setting : DEMO_RX_ANT_DELAY_CALIB_CH9
TMLUWB  :TX > :SEND                :2F210010 09020D04 01454802 4148034E 48045400
HALUCI  :RX < :RECV                :4F210001 00
APP     :WARN :Getting : DEMO_RX_ANT_DELAY_CALIB_CH9
TMLUWB  :TX > :SEND                :2F220002 0900
HALUCI  :RX < :RECV                :4F220011 0003020D 04014548 02414803 4E480454
 48
APP     :WARN :Setting : DEMO_PDOA_OFFSET_CALIB_CH5
TMLUWB  :TX > :SEND                :2F21000A 05030702 01D23A02 4600
HALUCI  :RX < :RECV                :4F210001 00
APP     :WARN :Getting : DEMO_PDOA_OFFSET_CALIB_CH5
TMLUWB  :TX > :SEND                :2F220002 0500
HALUCI  :RX < :RECV                :4F22000B 00010307 0201D23A 0246C2
APP     :WARN :Setting : DEMO_PDOA_OFFSET_CALIB_CH9
TMLUWB  :TX > :SEND                :2F21000A 09030702 019A4F02 6D00
HALUCI  :RX < :RECV                :4F210001 00
APP     :WARN :Getting : DEMO_PDOA_OFFSET_CALIB_CH9
```


All information provided in this document is subject to legal disclaimers.
© 2026 NXP B.V. All rights reserved.

```
TMLUWB  :TX > :SEND                :2F220002 0900
HALUCI  :RX < :RECV                :4F22000B 00010307 02019A4F 026D4B
APP     :WARN :Setting : DEMO_TX_POWER_PER_ANTENNA_CH5
TMLUWB  :TX > :SEND                :2F21000E 05040B02 0103002A 00020300 2C00
HALUCI  :RX < :RECV                :4F210001 00
APP     :WARN :Getting : DEMO_TX_POWER_PER_ANTENNA_CH5
TMLUWB  :TX > :SEND                :2F220002 0500
HALUCI  :RX < :RECV                :4F22000F 0001040B 02010300 2A000203 002C00
APP     :WARN :Setting : DEMO_TX_POWER_PER_ANTENNA_CH9
TMLUWB  :TX > :SEND                :2F21000E 09040B02 0103002F 00020300 3200
HALUCI  :RX < :RECV                :4F210001 00
APP     :WARN :Getting : DEMO_TX_POWER_PER_ANTENNA_CH9
TMLUWB  :TX > :SEND                :2F220002 0900
HALUCI  :RX < :RECV                :4F22000F 0001040B 02010300 2F000203 003200
APP     :WARN :Setting : DEMO_AOA_ANTENNAS_PDOA_CALIB_AP1_CH5
TMLUWB  :TX > :SEND                :2F2100F7 0562F401 01493BC3 2FFE2588 1B720F1D
 00C4F168 E5B1DC39 D235C1CA 38F12ED3 248F1961 0EF6FFD8 F147E59B DB28D13D
 C13C37EB 2E0E2519 1A690E00 0038F194 E571DB80 D0B9C1B5 37952E16 26A21A54
 0D96FF90 F0A3E5BF DACFCF8C C5123B84 2F552851 1B2E0C3A FF7CF0B7 E552D947
 CFCBC7C3 41E23406 2E991F84 10BF004B F249E741 D925D367 CE5546CD 34C02CAF
 22481392 02BEF404 E9CADB2C D96BD6E9 43152DA7 1FC61BD8 0E4701FA F4B0E9A8
 DF01DD5A DAB2405D 2E1821EF 15070C38 FD07F1B3 E59BDE5F D9EED654 3E3236EF
 2A031706 0DB7FC21 ED14DDA3 D763CFA4 C9C9375F 40983652 1C310E29 036FF3BC
 E03AD5EE C5AB00
HALUCI  :RX < :RECV                :4F210001 00
APP     :WARN :Getting : DEMO_AOA_ANTENNAS_PDOA_CALIB_AP1_CH5
TMLUWB  :TX > :SEND                :2F220003 056200
HALUCI  :RX < :RECV                :4F2200F8 000162F4 0101493B C32FFE25 881B720F
 1D00C4F1 68E5B1DC 39D235C1 CA38F12E D3248F19 610EF6FF D8F147E5 9BDB28D1
 3DC13C37 EB2E0E25 191A690E 000038F1 94E571DB 80D0B9C1 B537952E 1626A21A
 540D96FF 90F0A3E5 BFDACFCF 8CC5123B 842F5528 511B2E0C 3AFF7CF0 B7E552D9
 47CFCBC7 C341E234 062E991F 8410BF00 4BF249E7 41D925D3 67CE5546 CD34C02C
 AF224813 9202BEF4 04E9CADB 2CD96BD6 E943152D A71FC61B D80E4701 FAF4B0E9
 A8DF01DD 5ADAB240 5D2E1821 EF15070C 38FD07F1 B3E59BDE 5FD9EED6 543E3236
 EF2A0317 060DB7FC 21ED14DD A3D763CF A4C9C937 5F409836 521C310E 29036FF3
 BCE03AD5 EEC5ABB9
APP     :WARN :Setting : DEMO_AOA_ANTENNAS_PDOA_CALIB_AP1_CH9
TMLUWB  :TX > :SEND                :2F2100F7 0962F401 016749E3 380B2E3B 1E54148C
 0BEFF42F DE5CCE7B BF18B75A 45513AF4 2F1C23CE 15A40B30 F7A9E4AE D2CDC2D9
 B9BC4349 3B7C2FEB 22D415A5 0850F6CB E45ED23B C4B6B819 43523AA7 2E0522DE
 132C03D0 F26DE23C D1B4C495 B9DC429F 3A5D2F08 232E11F0 00C4F2D1 E088CF18
 C38EB8CA 41D938B4 2C28203C 103A028F F299DD24 CD83C29E B6853FE7 36A22A61
 1EBB11FB 03A1F23A DDF4CC72 C199B659 3D163712 2B4C1D90 10260600 F48BDE0F
 CE28C249 B76D3CD7 37EE29F2 1CA6104D 06E4F450 DE30CF5A C2CFB976 3B223676
 2A9F1E84 12B8046C F617DCDA CED7C179 BC07385E 33132DA1 1B5E1503 099DF3E7
 D89ECF40 C20500
HALUCI  :RX < :RECV                :4F210001 00
APP     :WARN :Getting : DEMO_AOA_ANTENNAS_PDOA_CALIB_AP1_CH9
TMLUWB  :TX > :SEND                :2F220003 096200
HALUCI  :RX < :RECV                :4F2200F8 000162F4 01016749 E3380B2E 3B1E5414
 8C0BEFF4 2FDE5CCE 7BBF18B7 5A45513A F42F1C23 CE15A40B 30F7A9E4 AED2CDC2
 D9B9BC43 493B7C2F EB22D415 A50850F6 CBE45ED2 3BC4B6B8 1943523A A72E0522
 DE132C03 D0F26DE2 3CD1B4C4 95B9DC42 9F3A5D2F 08232E11 F000C4F2 D1E088CF
 18C38EB8 CA41D938 B42C2820 3C103A02 8FF299DD 24CD83C2 9EB6853F E736A22A
 611EBB11 FB03A1F2 3ADDF4CC 72C199B6 593D1637 122B4C1D 90102606 00F48BDE
 0FCE28C2 49B76D3C D737EE29 F21CA610 4D06E4F4 50DE30CF 5AC2CFB9 763B2236
 762A9F1E 8412B804 6CF617DC DACED7C1 79BC0738 5E33132D A11B5E15 03099DF3
 E7D89ECF 40C205C0
APP     :WARN :Setting : DEMO_AOA_ANTENNAS_PDOA_CALIB_AP2_CH5
```


All information provided in this document is subject to legal disclaimers.
© 2026 NXP B.V. All rights reserved.

```
TMLUWB  :TX > :SEND                :2F2100F7 0562F401 0202CE24 D072D454 D9AADFBD
 E79BEF2F F7D3FEEA 09971BB1 C656C8DE CBF0D2A9 DCCAE637 F272FFE6 06510AFE
 0A88C9F4 CCA3CF31 D660E0FE EAA2F7CB 0E9C1A2E 1F071F15 C7F2CB9A CE82D4A8
 E088EDC9 FB181460 2AC033C6 2FF2BFC4 C41CC9E2 D07FDF5D EDF200E0 18902A1C
 31B6305B BE81C292 C9C9D3CB DF44EF43 05591B96 28DE3044 3395BECA C49BCE81
 D875E194 EDD20344 18F12202 2FD83B8B C139CB7F D433DB93 DFD8EADE 01021346
 1A442DA5 41BEC007 CECED797 DE7EE42E F1C60214 0FA413CF 26D53E75 C90FD448
 DD19E44D EA49F2D4 FB6D038C 09031C81 306CE663 EBDCF0D6 EFD3F19A F416F9F1
 FB16FE45 0BE300
HALUCI  :RX < :RECV                :4F210001 00
APP     :WARN :Getting : DEMO_AOA_ANTENNAS_PDOA_CALIB_AP2_CH5
TMLUWB  :TX > :SEND                :2F220003 056200
HALUCI  :RX < :RECV                :4F2200F8 000162F4 010202CE 24D072D4 54D9AADF
 BDE79BEF 2FF7D3FE EA09971B B1C656C8 DECBF0D2 A9DCCAE6 37F272FF E606510A
 FE0A88C9 F4CCA3CF 31D660E0 FEEAA2F7 CB0E9C1A 2E1F071F 15C7F2CB 9ACE82D4
 A8E088ED C9FB1814 602AC033 C62FF2BF C4C41CC9 E2D07FDF 5DEDF200 E018902A
 1C31B630 5BBE81C2 92C9C9D3 CBDF44EF 4305591B 9628DE30 443395BE CAC49BCE
 81D875E1 94EDD203 4418F122 022FD83B 8BC139CB 7FD433DB 93DFD8EA DE010213
 461A442D A541BEC0 07CECED7 97DE7EE4 2EF1C602 140FA413 CF26D53E 75C90FD4
 48DD19E4 4DEA49F2 D4FB6D03 8C09031C 81306CE6 63EBDCF0 D6EFD3F1 9AF416F9
 F1FB16FE 450BE332
APP     :WARN :Setting : DEMO_AOA_ANTENNAS_PDOA_CALIB_AP2_CH9
TMLUWB  :TX > :SEND                :2F2100F7 0962F401 0235DFA7 E812F273 FA2B0103
 07C00FAB 1BEB2672 2DD72F1A D719E2A2 EBE1F6F7 FEE3079F 154D214C 27C52E63
 38AAD0B8 DA6EE5D0 F374FC3D 08571A51 27392DB1 33993C41 C85FCF29 DFC6F04A
 FB7809A2 1D722894 2E07397E 42D6C594 CE61D84F EAC2FAB3 08E819C6 267A30E1
 38AE3EBF C369CE73 D9F1ED66 FD9E08E0 18ED2398 30B33996 3C82BD19 C931D94D
 EC2DF84A 05A41763 250B3123 37953E17 C4BEC865 DB06EDD3 F64A06BB 17572474
 2F7D362D 3852D13B D6C3E4EE F031FB6F 08CB1540 1EB123D8 2B3E3C2B DF12E632
 ED71F6F0 FF3809B0 13FF1C7B 251A2DFC 2E8FEA2B EDE8F566 FC6D0338 0B8A12DA
 161A1A35 1CCF00
HALUCI  :RX < :RECV                :4F210001 00
APP     :WARN :Getting : DEMO_AOA_ANTENNAS_PDOA_CALIB_AP2_CH9
TMLUWB  :TX > :SEND                :2F220003 096200
HALUCI  :RX < :RECV                :4F2200F8 000162F4 010235DF A7E812F2 73FA2B01
 0307C00F AB1BEB26 722DD72F 1AD719E2 A2EBE1F6 F7FEE307 9F154D21 4C27C52E
 6338AAD0 B8DA6EE5 D0F374FC 3D08571A 5127392D B133993C 41C85FCF 29DFC6F0
 4AFB7809 A21D7228 942E0739 7E42D6C5 94CE61D8 4FEAC2FA B308E819 C6267A30
 E138AE3E BFC369CE 73D9F1ED 66FD9E08 E018ED23 9830B339 963C82BD 19C931D9
 4DEC2DF8 4A05A417 63250B31 2337953E 17C4BEC8 65DB06ED D3F64A06 BB175724
 742F7D36 2D3852D1 3BD6C3E4 EEF031FB 6F08CB15 401EB123 D82B3E3C 2BDF12E6
 32ED71F6 F0FF3809 B013FF1C 7B251A2D FC2E8FEA 2BEDE8F5 66FC6D03 380B8A12
 DA161A1A 351CCF1D
APP     :WARN :Setting : DEMO_TX_ANT_DELAY_CALIB_CH5
TMLUWB  :TX > :SEND                :2F210007 05640401 01E800
HALUCI  :RX < :RECV                :4F210001 00
APP     :WARN :Getting : DEMO_TX_ANT_DELAY_CALIB_CH5
TMLUWB  :TX > :SEND                :2F220002 0500
HALUCI  :RX < :RECV                :4F220008 00016404 0101E8FF
APP     :WARN :Setting : DEMO_TX_ANT_DELAY_CALIB_CH9
TMLUWB  :TX > :SEND                :2F210007 09640401 01F800
HALUCI  :RX < :RECV                :4F210001 00
APP     :WARN :Getting : DEMO_TX_ANT_DELAY_CALIB_CH9
TMLUWB  :TX > :SEND                :2F220002 0900
HALUCI  :RX < :RECV                :4F220008 00016404 0101F8FF
APP     :WARN :Setting : DEMO_PDOA_MANUFACT_ZERO_OFFSET_CALIB_CH5
TMLUWB  :TX > :SEND                :2F21000A 05650702 01000002 0000
HALUCI  :RX < :RECV                :4F210001 00
APP     :WARN :Getting : DEMO_PDOA_MANUFACT_ZERO_OFFSET_CALIB_CH5
TMLUWB  :TX > :SEND                :2F220002 0500
```


All information provided in this document is subject to legal disclaimers.
© 2026 NXP B.V. All rights reserved.

```
HALUCI  :RX < :RECV                :4F22000B 00016507 02010000 020000
APP     :WARN :Setting : DEMO_PDOA_MANUFACT_ZERO_OFFSET_CALIB_CH9
TMLUWB  :TX > :SEND                :2F21000A 09650702 01000002 0000
HALUCI  :RX < :RECV                :4F210001 00
APP     :WARN :Getting : DEMO_PDOA_MANUFACT_ZERO_OFFSET_CALIB_CH9
TMLUWB  :TX > :SEND                :2F220002 0900
HALUCI  :RX < :RECV                :4F22000B 00016507 02010000 020000
APP     :WARN :Setting : DEMO_AOA_THRESHOLD_PDOA_CH5
TMLUWB  :TX > :SEND                :2F21000A 05660702 01D3E002 4500
HALUCI  :RX < :RECV                :4F210001 00
APP     :WARN :Getting : DEMO_AOA_THRESHOLD_PDOA_CH5
TMLUWB  :TX > :SEND                :2F220002 0500
HALUCI  :RX < :RECV                :4F22000B 00016607 0201D3E0 02451C
APP     :WARN :Setting : DEMO_AOA_THRESHOLD_PDOA_CH9
TMLUWB  :TX > :SEND                :2F21000A 09660702 019BF502 6E00
HALUCI  :RX < :RECV                :4F210001 00
APP     :WARN :Getting : DEMO_AOA_THRESHOLD_PDOA_CH9
TMLUWB  :TX > :SEND                :2F220002 0900
HALUCI  :RX < :RECV                :4F22000B 00016607 02019BF5 026EF1
APP     :WARN :Setting : DEMO_TX_TEMPERATURE_COMP_PER_ANTENNA_CH5
TMLUWB  :TX > :SEND                :2F210016 05671302 01800080 00800080 00028000
 80008000 8000
HALUCI  :RX < :RECV                :4F210001 00
APP     :WARN :Getting : DEMO_TX_TEMPERATURE_COMP_PER_ANTENNA_CH5
TMLUWB  :TX > :SEND                :2F220002 0500
HALUCI  :RX < :RECV                :4F220017 00016713 02018000 80008000 80000280
 00800080 008000
APP     :WARN :Setting : DEMO_TX_TEMPERATURE_COMP_PER_ANTENNA_CH9
TMLUWB  :TX > :SEND                :2F210016 09671302 01800080 00800080 00028000
 80008000 8000
HALUCI  :RX < :RECV                :4F210001 00
APP     :WARN :Getting : DEMO_TX_TEMPERATURE_COMP_PER_ANTENNA_CH9
TMLUWB  :TX > :SEND                :2F220002 0900
HALUCI  :RX < :RECV                :4F220017 00016713 02018000 80008000 80000280
 00800080 008000
APP     :WARN :Setting : DEMO_RSSI_CALIB_CONSTANT_PER_ANTENNA_CH5
TMLUWB  :TX > :SEND                :2F210008 05690502 01000200
HALUCI  :RX < :RECV                :4F210001 00
APP     :WARN :Getting : DEMO_RSSI_CALIB_CONSTANT_PER_ANTENNA_CH5
TMLUWB  :TX > :SEND                :2F220002 0500
HALUCI  :RX < :RECV                :4F220009 00016905 02010002 00
APP     :WARN :Setting : DEMO_RSSI_CALIB_CONSTANT_PER_ANTENNA_CH9
TMLUWB  :TX > :SEND                :2F210008 09690502 01000200
HALUCI  :RX < :RECV                :4F210001 00
APP     :WARN :Getting : DEMO_RSSI_CALIB_CONSTANT_PER_ANTENNA_CH9
TMLUWB  :TX > :SEND                :2F220002 0900
HALUCI  :RX < :RECV                :4F220009 00016905 02010002 00
APP     :INFO :Finished /opt/samba/nxf88846/uwb/_ddm/repo1/uwbiot-top/demos/
SR2XX/demo_device_calibration/demo_device_calibration.c : Success!
```

5.1.9 FRDM_RW612 Plug-n-Play FW

This firmware enables PC applications to run over the FRDM_RW612 board. The FRDM_RW612 board runs the PnP firmware, which acts as a bridge between PC applications and the SR250 chip. PC applications send commands over UART to the PnP firmware, which forwards them to the SR250 and relays responses and notifications back to the PC.

All information provided in this document is subject to legal disclaimers.
© 2026 NXP B.V. All rights reserved.

5.1.9.1 How to Use

The PnP FW supports internal FW download and also from application, by default internal firmware download is disabled. to enable the internal firmware download, enable following macro.

```
/* Internal Firmware Download is DISABLED by Default.
 *
 * Enable it if required by setting INTERNAL_FIRMWARE_DOWNLOAD to ENABLED
 */

#define INTERNAL_FIRMWARE_DOWNLOAD DISABLED
```

1. Flash the FW on to FRDM_RW612 board.
2. Pre-built firmware is present in `binaries/FRDM_RW612` directory.
3. On PC, set environment variable `UWBIOT_ENV_COM` to the FRDM_RW612 UART *COMPORT* and execute the application.

All information provided in this document is subject to legal disclaimers.
© 2026 NXP B.V. All rights reserved.

6 Appendix

6.1 Peer-to-Peer ranging

Peer-To-Peer Ranging Use Case works in the following flow:

1. Initialize the UWB Stack, call `UwbApi_Initialize()`.
2. Create a session for Ranging with a 4-byte unique session ID and session type `Ranging` (0x00) using `UwbApi_SessionInit()`.
   Note:
   Same session ID should be used by both Initiator and responder.
   All default session configs are applied at the time of session creation.
3. Set mandatory ranging params with `UwbApi_SetRangingParam()`
   - SR100T is configured as Controlee Responder
   - SR040 is configured as Controller Initiator
   - Number of anchors are set to 1 for unicast session
   - Source MAC address (2 byte SR100T dev address)
   - Dest MAC address (2 byte R4 address)

   Note:
   While setting mandatory params Source address of SR100T must be set as Destination address for R4 and vice versa.
4. Set static STS using `UwbApi_SetStaticSts()` (2-byte VendorID and 6-byte STS IV). Same values must be set for both SR100T and SR040.
5. Apply the application specific ranging configurations by calling `UwbApi_SetAppConfig()`. For reference, the following configurations can be set
   - `RANGING_SLOT_LEN = 2000`
   - `RANGING_DURATION = 0x60`
   - `STS_INDEX = 0`
   - `PREAMBLE_ID = 0x0A`
   - `SFD_ID = 0x00`
   - `STS_CONFIG = 0x00`
   - `MAC_FCS_TYPE = 0x00`
   - `PREAMBLE_DURATION = 1`
   - `MAC_CFG = 3`
   - `PPDU_CONFIG = 0x03`
   - `RNG_DATA_NTF = 1`
   - `RANGING_ROUND_HOPPING = 0`
   - `RX_MODE = 0`
   - `RX_ANTENNA_SELECTION = 1`
   - `NUMBER_OF_STS_SEGMENTS = 1`
   - `CHANNEL_ID = 0x09`
   - `PSDU_DATA_RATE = 0x00`
   - `RANGING_METHOD = 0x02`
   - `RANGING_ROUND_CONTROL = 0x02`

   For more details, refer to FIRA UCI Generic Spec.
   Set same configurations for SR100T and SR040.
6. Start ranging by calling `UwbApi_StartRangingSession()`.
7. Stop the ranging session with `UwbApi_StopRangingSession()` and de-initialize the session by calling `UwbApi_SessionDeinit()`.

All information provided in this document is subject to legal disclaimers.
© 2026 NXP B.V. All rights reserved.

6.2 UCI Command timeout handling

The following process is done to handle command timeouts:

1. API is invoked from Application Task, UCI command is sent to UWBS as a part of API.
2. If response is not received command retry is attempted. If response is not received for the second time as well, UCI timeout status is notified to upper layers.
3. API gets unblocked wit status UCI timeout. Same status is returned to Application.
4. Applications post message to exception handling task or start recovery timer.
5. Application tasks waits for recovery
6. Exception handling task/ or in the context of timeout, Recovery API is invoked. Recovery API performs certain operations are shown in the flow diagram.
7. After recovery All session state context is deleted, and application task is restarted.

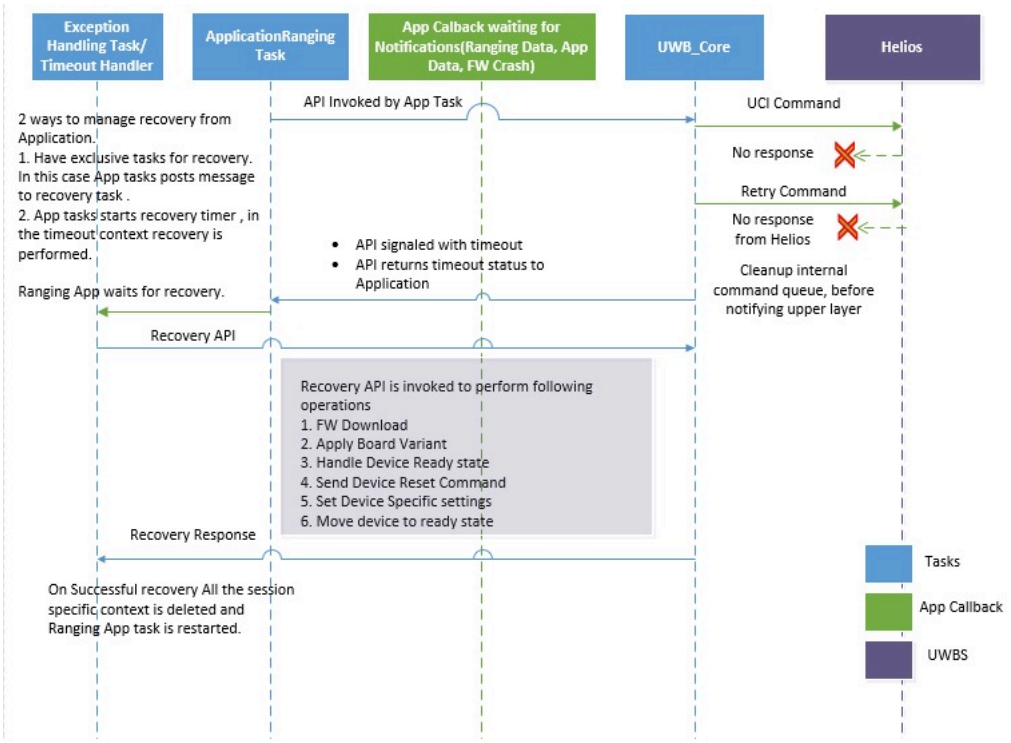

6.3 Logging Configurations

1. Logging can be configured for each module and for all modules. All logging specific settings can be configured in the file `/uwbiot-top/libs/halimpl/inc/phNxpLogDefault.h`.
2. Configuring Logging for all modules is via **global logging level**.
   This defines the common logging level for all the modules. Global logging level overrides the local logging level.
   Example: If Global Logging level is set to `UWB_LOG_INFO_LEVEL` and local logging level is set to `UWB_LOG_DEBUG_LEVEL` then only Global Logging level `UWB_LOG_INFO_LEVEL` messages will be seen.
3. Logging levels.

All information provided in this document is subject to legal disclaimers.
© 2026 NXP B.V. All rights reserved.

There are 7 different log levels defined in the file `/uwbiot-top/libs/halimpl/inc/uwb_logging.h`:

```
#define UWB_LOG_SILENT_LEVEL    0x00    // "Silent"     level
#define UWB_LOG_ERROR_LEVEL     0x01    // "Error"      level
#define UWB_LOG_WARN_LEVEL      0x02    // "Warning"    level
#define UWB_LOG_INFO_LEVEL      0x03    // "Info"       level [Default]
#define UWB_LOG_DEBUG_LEVEL     0x04    // "Debug"      level
#define UWB_LOG_TX_LEVEL        0x05    // "Tx"         level
#define UWB_LOG_RX_LEVEL        0x06    // "Rx"         level
```

4. Configure global level logging
   `#define UWB_GLOBAL_LOG_LEVEL UWB_LOG_INFO_LEVEL`
   To set the global logging level, use above macro defined in `phNxpLogDefault.h` file. Depending on this macro, sub modules are enabled/disabled. If global level logging is higher than module level logging, global level logging is considered. For e.g. If global logging is default level and APP module logging is debug level then debug level for APP module is not considered.
   a. To make logging level silent:
   ```
   #define UWB_GLOBAL_LOG_LEVEL UWB_LOG_SILENT_LEVEL
   ```
   b. By default logging level:
   ```
   #define UWB_GLOBAL_LOG_LEVEL UWB_LOG_INFO_LEVEL
   ```
5. Configuring Logging for a specific module is via **local logging level**.
   This defines the logging level only for a particular module. Example: To set logging level of UWB API module, local logging level of this module needs to be set by defining `UWBAPI_LOG_LEVEL` macro value to a particular level. Also Global logging level to be set higher or equal to the local logging level. To see all the “debug” messages in the UWB API module then following logging macros to be set:
   ```
   #define UWBAPI_LOG_LEVEL     UWB_LOG_DEBUG_LEVEL
   #define UWB_GLOBAL_LOG_LEVEL UWB_LOG_DEBUG_LEVEL
   ```
6. Enable/Disable logging of UCI commands.
   Tx means the UCI command transmitted to the UWB device. **Rx** means the UCI response or notification received from the UWB device.
   UCI prints can be enabled/disabled using following macro from `/uwbiot-top/libs/halimpl/inc/phNxpLogApis_TmlUwb.h`
   a. To Enable the UCI LOGGING:
   ```
   #define ENABLE_UCI_CMD_LOGGING ENABLED
   ```
   b. To Disable the UCI LOGGING:
   ```
   #define ENABLE_UCI_CMD_LOGGING DISABLED
   ```
7. Enable/Disable Logging of TML module
   Following macros to be set to enable or disable the TML module logging.
   a. To disable all logging in the TML module level:
   ```
   // in file /uwbiot-top/libs/halimpl/inc/phNxpLogApis_TmlUwb.h
   #define ENABLE_UCI_CMD_LOGGING DISABLED

   // in file /uwbiot-top/libs/halimpl/inc/phNxpLogDefault.h
   #define TMLUWB_LOG_LEVEL       UWB_LOG_SILENT_LEVEL

   // in file /uwbiot-top/libs/halimpl/inc/phNxpLogDefault.h
   #define UWB_GLOBAL_LOG_LEVEL   UWB_LOG_SILENT_LEVEL
   ```


All information provided in this document is subject to legal disclaimers.
© 2026 NXP B.V. All rights reserved.

b. To enable all logging in the TML module level:

```
// in file /uwbiot-top/libs/halimpl/inc/phNxpLogApis_TmlUwb.h
#define ENABLE_UCI_CMD_LOGGING ENABLED

// in file /uwbiot-top/libs/halimpl/inc/phNxpLogDefault.h
#define TMLUWB_LOG_LEVEL       UWB_LOG_DEBUG_LEVEL

// in file /uwbiot-top/libs/halimpl/inc/phNxpLogDefault.h
#define UWB_GLOBAL_LOG_LEVEL   UWB_LOG_DEBUG_LEVEL
```

c. To enable the TML module logging to **Info** level [default]:

```
// in file /uwbiot-top/libs/halimpl/inc/phNxpLogApis_TmlUwb.h
#define ENABLE_UCI_CMD_LOGGING ENABLED

// in file /uwbiot-top/libs/halimpl/inc/phNxpLogDefault.h
#define TMLUWB_LOG_LEVEL       UWB_LOG_INFO_LEVEL

// in file /uwbiot-top/libs/halimpl/inc/phNxpLogDefault.h]
#define UWB_GLOBAL_LOG_LEVEL   UWB_LOG_INFO_LEVEL
```

8. UART Logging with Verbose log level for Host board
UART verbose level of logging with default baud rate will slow down the complete system. Therefore we shall use 3Mbps baud rate.

```
/* The UART to use for debug messages. */
/* when UWBIOT_LOG=Verbose, set the baudrate to 3Mbps for viewing logs in
 terminal emulator(ex. Tera term)*/
#define BOARD_DEBUG_UART_TYPE kSerialPort_Uart
#if (UWBIOT_LOG_VERBOSE == 1)
#define BOARD_DEBUG_UART_BAUDRATE 3000000U // 3Mbps
#pragma message("Logging Baud rate is set to 3Mbits. Please change settings
 on Serial port GUI")
#else
#define BOARD_DEBUG_UART_BAUDRATE 3000000U
#endif
```


All information provided in this document is subject to legal disclaimers.
© 2026 NXP B.V. All rights reserved.

Legal information

Definitions

Draft — A draft status on a document indicates that the content is still under internal review and subject to formal approval, which may result in modifications or additions. NXP Semiconductors does not give any representations or warranties as to the accuracy or completeness of information included in a draft version of a document and shall have no liability for the consequences of use of such information.

Disclaimers

Limited warranty and liability — Information in this document is believed to be accurate and reliable. However, NXP Semiconductors does not give any representations or warranties, expressed or implied, as to the accuracy or completeness of such information and shall have no liability for the consequences of use of such information. NXP Semiconductors takes no responsibility for the content in this document if provided by an information source outside of NXP Semiconductors.

In no event shall NXP Semiconductors be liable for any indirect, incidental, punitive, special or consequential damages (including - without limitation - lost profits, lost savings, business interruption, costs related to the removal or replacement of any products or rework charges) whether or not such damages are based on tort (including negligence), warranty, breach of contract or any other legal theory.

Notwithstanding any damages that customer might incur for any reason whatsoever, NXP Semiconductors' aggregate and cumulative liability towards customer for the products described herein shall be limited in accordance with the Terms and conditions of commercial sale of NXP Semiconductors.

Right to make changes — NXP Semiconductors reserves the right to make changes to information published in this document, including without limitation specifications and product descriptions, at any time and without notice. This document supersedes and replaces all information supplied prior to the publication hereof.

Suitability for use — NXP Semiconductors products are not designed, authorized or warranted to be suitable for use in life support, life-critical or safety-critical systems or equipment, nor in applications where failure or malfunction of an NXP Semiconductors product can reasonably be expected to result in personal injury, death or severe property or environmental damage. NXP Semiconductors and its suppliers accept no liability for inclusion and/or use of NXP Semiconductors products in such equipment or applications and therefore such inclusion and/or use is at the customer's own risk.

Applications — Applications that are described herein for any of these products are for illustrative purposes only. NXP Semiconductors makes no representation or warranty that such applications will be suitable for the specified use without further testing or modification.

Customers are responsible for the design and operation of their applications and products using NXP Semiconductors products, and NXP Semiconductors accepts no liability for any assistance with applications or customer product design. It is customer's sole responsibility to determine whether the NXP Semiconductors product is suitable and fit for the customer's applications and products planned, as well as for the planned application and use of customer's third party customer(s). Customers should provide appropriate design and operating safeguards to minimize the risks associated with their applications and products.

NXP Semiconductors does not accept any liability related to any default, damage, costs or problem which is based on any weakness or default in the customer's applications or products, or the application or use by customer's third party customer(s). Customer is responsible for doing all necessary testing for the customer's applications and products using NXP Semiconductors products in order to avoid a default of the applications and the products or of the application or use by customer's third party customer(s). NXP does not accept any liability in this respect.

Terms and conditions of commercial sale — NXP Semiconductors products are sold subject to the general terms and conditions of commercial sale, as published at https://www.nxp.com/profile/terms, unless otherwise agreed in a valid written individual agreement. In case an individual agreement is concluded only the terms and conditions of the respective agreement shall apply. NXP Semiconductors hereby expressly objects to applying the customer's general terms and conditions with regard to the purchase of NXP Semiconductors products by customer.

Export control — This document as well as the item(s) described herein may be subject to export control regulations. Export might require a prior authorization from competent authorities.

Suitability for use in non-automotive qualified products — Unless this document expressly states that this specific NXP Semiconductors product is automotive qualified, the product is not suitable for automotive use. It is neither qualified nor tested in accordance with automotive testing or application requirements. NXP Semiconductors accepts no liability for inclusion and/or use of non-automotive qualified products in automotive equipment or applications.

In the event that customer uses the product for design-in and use in automotive applications to automotive specifications and standards, customer (a) shall use the product without NXP Semiconductors' warranty of the product for such automotive applications, use and specifications, and (b) whenever customer uses the product for automotive applications beyond NXP Semiconductors' specifications such use shall be solely at customer's own risk, and (c) customer fully indemnifies NXP Semiconductors for any liability, damages or failed product claims resulting from customer design and use of the product for automotive applications beyond NXP Semiconductors' standard warranty and NXP Semiconductors' product specifications.

HTML publications — An HTML version, if available, of this document is provided as a courtesy. Definitive information is contained in the applicable document in PDF format. If there is a discrepancy between the HTML document and the PDF document, the PDF document has priority.

Translations — A non-English (translated) version of a document, including the legal information in that document, is for reference only. The English version shall prevail in case of any discrepancy between the translated and English versions.

Security — Customer understands that all NXP products may be subject to unidentified vulnerabilities or may support established security standards or specifications with known limitations. Customer is responsible for the design and operation of its applications and products throughout their lifecycles to reduce the effect of these vulnerabilities on customer's applications and products. Customer's responsibility also extends to other open and/or proprietary technologies supported by NXP products for use in customer's applications. NXP accepts no liability for any vulnerability. Customer should regularly check security updates from NXP and follow up appropriately.

Customer shall select products with security features that best meet rules, regulations, and standards of the intended application and make the ultimate design decisions regarding its products and is solely responsible for compliance with all legal, regulatory, and security related requirements concerning its products, regardless of any information or support that may be provided by NXP.

NXP has a Product Security Incident Response Team (PSIRT) (reachable at PSIRT@nxp.com) that manages the investigation, reporting, and solution release to security vulnerabilities of NXP products.

NXP B.V. — NXP B.V. is not an operating company and it does not distribute or sell products.

Trademarks

Notice: All referenced brands, product names, service names, and trademarks are the property of their respective owners.

NXP — wordmark and logo are trademarks of NXP B.V.

© 2026 NXP B.V. All rights reserved.

Contents

1 UWB IoT Middleware 1
1.1 Introduction 1
1.2 Acronyms 1
2 Architecture 2
2.1 Folder Structure 2
2.1.1 Root Folder 2
2.1.2 /uwbiot-top/boards 2
2.1.3 /uwbiot-top/demos 3
2.1.4 /uwbiot-top/docs 3
2.1.5 /uwbiot-top/firmware_images 3
2.1.6 /uwbiot-top/libs 3
2.1.7 /uwbiot-top/project 4
2.2 Block Diagram 4
2.2.1 SR250 - Zephyr RTOS 5
2.2.2 Components 6
2.3 Modes of operation of the MW 7
2.3.1 Standalone Mode 7
2.3.2 PNP Mode 9
2.3.3 FiRa / MCTT / PCTT Mode 9
2.4 Dynamic View 10
2.4.1 UWB Stack Init Sequence 10
2.4.2 UWB Stack DeInit Sequence 11
2.4.3 P2P, Multicast Ranging 12
2.4.4 BLE - OOB 14
2.5 UCI Command timeout handling 14
2.5.1 Recovery : FW Crash Handling from MW 15
3 UWB Device 17
3.1 SR2XX 17
3.1.1 SR2XX SPI communication 17
3.1.2 HDLL 20
4 Projects 22
4.1 MCUXpresso IDE Projects 22
4.1.1 FRDM_RW612-SR250 Standalone MCUXpresso Project 22
5 Demos 23
5.1 SR250 Demos with FRDM RW612 host 23
5.1.1 Demo List SR250 with FRDM RW612 23
5.1.2 Demo FW update 24
5.1.3 Demo Ranging Controlee 27
5.1.4 Demo Ranging Controller 27
5.1.5 SR250 Radar 28
5.1.6 SR250 ON Chip Presence Detection 29
5.1.7 Demo nearby interaction 30
5.1.8 Demo Device Calibration 36
5.1.9 FRDM_RW612 Plug-n-Play FW 41
6 Appendix 43
6.1 Peer-to-Peer ranging 43
6.2 UCI Command timeout handling 44
6.3 Logging Configurations 44
Legal information 47

Please be aware that important notices concerning this document and the product(s) described herein, have been included in section 'Legal information'.

© 2026 NXP B.V. All rights reserved.

For more information, please visit: https://www.nxp.com Document feedback

Date of release: 16 March 2026
Document identifier: UWBIOT_MIDDLEWARE_GUIDE