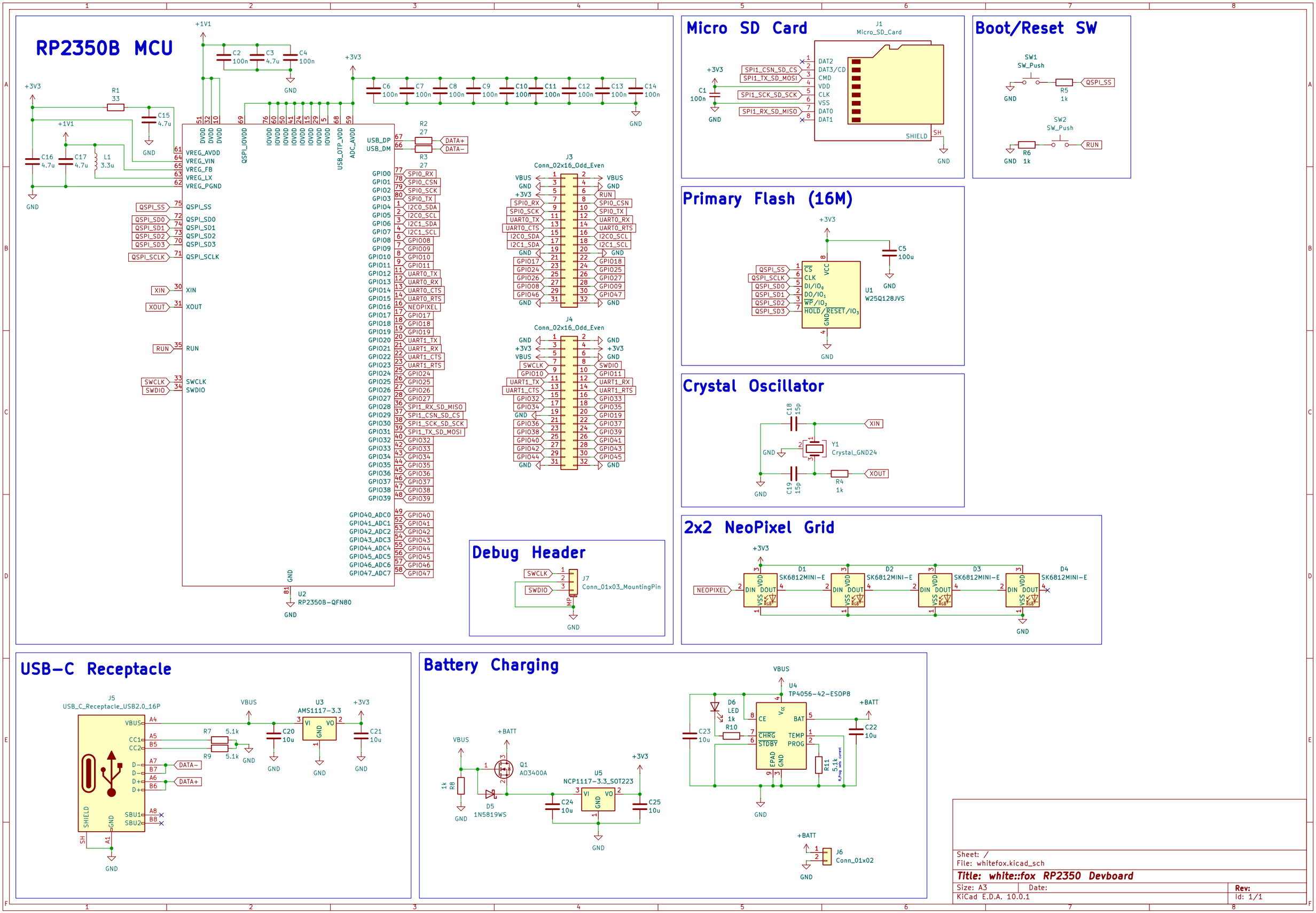
RP2350B MCU
U2
RP2350B-QFN80
Micro SD Card
J1
Micro_SD_Card
Boot/Reset SW
SW1
SW_Push
SW2
SW_Push
Primary Flash (16M)
U1
W25Q128JVS
Crystal Oscillator
Y1
Crystal_GND24
2x2 NeoPixel Grid
D1
D2
D3
D4
SK6812MINI-E
Debug Header
J7
Conn_01x03_MountingPin
J3
Conn_02x16_Odd_Even
J4
Conn_02x16_Odd_Even
USB-C Receptacle
J5
USB_C_Receptacle_USB2.0_16P
U3
AMS1117-3.3
Battery Charging
U4
TP4056-42-ESOP8
Q1
AO3400A
U5
NCP1117-3.3_SOT223
D5
1N5819WS
J6
Conn_01x02
Sheet: /
File: whitefox.kicad_sch
Title: white::fox RP2350 Devboard
Size: A3
Date:
Rev:
KiCad E.D.A. 10.0.1
Id: 1/1