Sparsity in images, a basis better than Fourier basis

Background knowlege: Cooley-Tukey FFT

The *Fourier basis* in $\mathbb{R}^n$ is given by the DFT matrix $(F_n)_{i,j} = \omega^{(i-1)(j-1)}$, where $\omega = e^{-2\pi i/n}$ is the primitive n-th root of unity. F_n is a Vandermonde matrix:

$$F_n = \left(\begin{array}{cccccccc} 1 & 1 & 1 & \dots & 1 & 1 & \dots & 1 & 1 \\ 1 & \omega & \omega^2 & \dots & \omega^{\frac{n}{2}-1} & \omega^{\frac{n}{2}} & \dots & \omega^{n-2} & \omega^{n-1} \\ 1 & \omega^2 & \omega^4 & \dots & \omega^{n-2} & \omega^n & \dots & \omega^{2n-4} & \omega^{2n-2} \\ \vdots & \vdots & \vdots & \ddots & \vdots & \vdots & \ddots & \vdots & \vdots \\ 1 & \omega^{\frac{n}{2}-1} & \omega^{n-2} & \dots & \omega^{(\frac{n}{2}-1)^2} & \omega^{(\frac{n}{2}-1)\frac{n}{2}} & \dots & \omega^{(\frac{n}{2}-1)(n-2)} & \omega^{(\frac{n}{2}-1)(n-1)} \\ \hline 1 & \omega^{\frac{n}{2}} & \omega^n & \dots & \omega^{\frac{n}{2}(\frac{n}{2}-1)} & \omega^{(\frac{n}{2})^2} & \dots & \omega^{\frac{n}{2}(n-2)} & \omega^{\frac{n}{2}(n-1)} \\ \vdots & \vdots & \vdots & \ddots & \vdots & \vdots & \ddots & \vdots & \vdots \\ 1 & \omega^{n-1} & \omega^{2n-2} & \dots & \omega^{(n-1)(\frac{n}{2}-1)} & \omega^{(n-1)\frac{n}{2}} & \dots & \omega^{(n-1)(n-2)} & \omega^{(n-1)^2} \end{array}\right). \tag{1}$$

The Cooley-Tukey FFT is a divide-and-conquer algorithm for computing the DFT. For simplicity, we assume n is a power of 2, such that we can divide the matrix into 4 blocks:

- The odd columns (blue background), top half:

$$F_{\text{odd, top}} = \begin{pmatrix} 1 & 1 & \dots & 1 \\ 1 & \omega^2 & \dots & \omega^{n-2} \\ \vdots & \vdots & \ddots & \vdots \\ 1 & \omega^{n-2} & \dots & \omega^{(\frac{n}{2}-1)(n-2)} \end{pmatrix} = \begin{pmatrix} 1 & 1 & \dots & 1 \\ 1 & (\omega^2) & \dots & (\omega^2)^{\frac{n}{2}-1} \\ \vdots & \vdots & \ddots & \vdots \\ 1 & (\omega^2)^{\frac{n}{2}-1} & \dots & (\omega^2)^{(\frac{n}{2}-1)(\frac{n}{2}-1)} \end{pmatrix} = F_{\frac{n}{2}} \tag{2}$$

- The even columns (white background), top half:

$$F_{\text{even, top}} = D_{\frac{n}{2}} F_{\frac{n}{2}} \tag{3}$$

  where $D_n = \operatorname{diag}(1, \omega, \omega^2, \dots, \omega^{n-1})$.
- The odd columns (blue background), bottom half:

$$F_{\text{odd, bottom}} = F_{\frac{n}{2}}. \tag{4}$$

  Note $\omega^n = 1$ is ignored.
- The even columns (white background), bottom half:

$$F_{\text{even, bottom}} = -D_{\frac{n}{2}} F_{\frac{n}{2}}, \tag{5}$$

  where the minus sign comes from $\omega^{\frac{n}{2}} = -1$.

Finally, we arrive at the Cooley-Tukey FFT given by:

$$F_n \boldsymbol{x} = \begin{pmatrix} I_{\frac{n}{2}} & D_{\frac{n}{2}} \\ I_{\frac{n}{2}} & -D_{\frac{n}{2}} \end{pmatrix} \begin{pmatrix} F_{\frac{n}{2}} & 0 \\ 0 & F_{\frac{n}{2}} \end{pmatrix} \begin{pmatrix} \boldsymbol{x}_{\text{odd}} \\ \boldsymbol{x}_{\text{even}} \end{pmatrix} \tag{6}$$

where $\boldsymbol{x}_{\text{odd}}$ and $\boldsymbol{x}_{\text{even}}$ contain the odd and even indexed elements of $\boldsymbol{x}$, respectively. It indicates that the discrete Fourier transormation in $\mathbb{R}^n$ can be decomposed into two smaller discrete Fourier transormations in $\mathbb{R}^{\frac{n}{2}}$ with a diagonal matrix D_n in between. Note applying diagonal matrices can be done in $O(n)$ operations, this decomposition leads to the recurrence relation $T(n) = 2T(\frac{n}{2}) + O(n)$, which solves to $O(n \log n)$ total operations.

The inverse transformation is given by $F_n^\dagger \boldsymbol{x}/n$. The DFT matrix is unitary up to a scale factor: $F_n F_n^\dagger = nI$.

Tensor network representation of the Cooley-Tukey FFT

This section requires preliminary knowledge of tensor networks (TODO: add reference). In tensor network diagram, a vector of size $n = 2^k$ can be represented as a tensor with k indices, denoting the basis index $i = 2^0 q_0 + 2^1 q_1 + ... + 2^{k-1} q_{k-1}$.

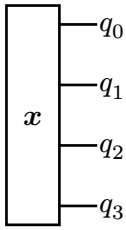

In the following, we aim to find a tensor network decomposition for the linear map F_n:

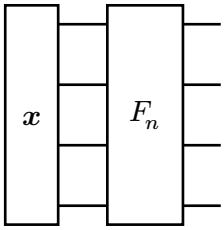

Step 1: To start, the equation Equation 6 can be represented as the following tensor network:

$$F_n \boldsymbol{x} = \left(\begin{pmatrix} 1 & 1 \\ 1 & -1 \end{pmatrix} \otimes I_{\frac{n}{2}} \right) \begin{pmatrix} I_{\frac{n}{2}} & 0 \\ 0 & D_{\frac{n}{2}} \end{pmatrix} \begin{pmatrix} F_{\frac{n}{2}} \boldsymbol{x}_{\text{odd}} \\ F_{\frac{n}{2}} \boldsymbol{x}_{\text{even}} \end{pmatrix}, \tag{7}$$

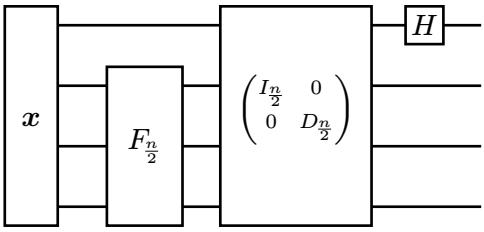

where $H = \begin{pmatrix} 1 & 1 \\ 1 & -1 \end{pmatrix}$ is a Hadamard matrix (upto a constant factor).

Step 2: Then, we will decompose the diagonal matrix $\begin{pmatrix} I_{\frac{n}{2}} & 0 \\ 0 & D_{\frac{n}{2}} \end{pmatrix}$ into a tensor network. This diagonal matrix corresponds to operation: if q_0 is 0 (odd index), the no operation is applied, otherwise (even index) the operation $D_{\frac{n}{2}}$ is applied. Observe that $D_n = \operatorname{diag}\left(1, \omega^{\frac{n}{2}}\right) \otimes \operatorname{diag}\left(1, \omega, \omega^2, ..., \omega^{\frac{n}{2}-1}\right) = \operatorname{diag}\left(1, \omega^{\frac{n}{2}}\right) \otimes \operatorname{diag}\left(1, \omega^{\frac{n}{4}}\right) \otimes ... \otimes \operatorname{diag}(1, \omega)$. We have

$$\begin{pmatrix} I_{\frac{n}{2}} & 0 \\ 0 & D_{\frac{n}{2}} \end{pmatrix} = \operatorname{ctrl}_0\left(\operatorname{diag}\left(1, \omega^{\frac{n}{4}}\right)_1\right) \operatorname{ctrl}_0\left(\operatorname{diag}\left(1, \omega^{\frac{n}{8}}\right)_2\right) ... \operatorname{ctrl}_0\left(\operatorname{diag}(1, \omega)_{\log_2 n}\right), \tag{8}$$

where $\operatorname{ctrl}_i(A_j)$ means the target operation applied on A_j is applied only if bit q_i is 1. Here, since the controlled gate is diagonal, it can be represented as a matrix connecting two variables:

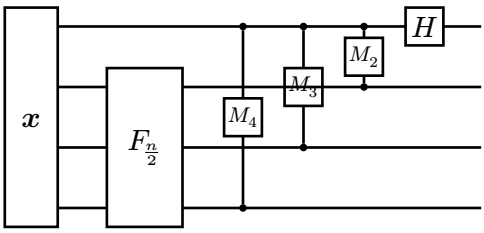

In this diagram, $M_k = \begin{pmatrix} 1 & 1 \\ 1 & e^{i\pi/2^{k-1}} \end{pmatrix}$ connects the two qubits involved in the controlled operation, which effectively multilies a phase factor $e^{i\pi/2^{k-1}}$ if two bit are both in state 1. By recursively decomposing the $F_{\frac{n}{2}}$ tensor, we can obtain the following tensor network.

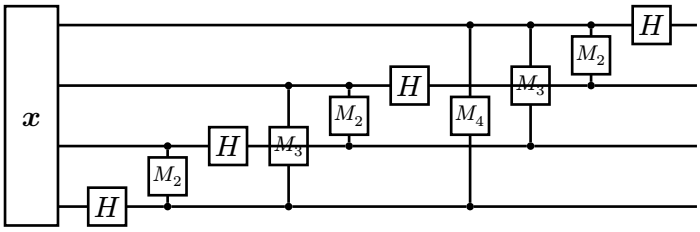

Direct evaluation of this tensor network takes $O(n \log^2 n)$ operations. By respecting the fact that the *controlled phase* operation is a diagonal matrix, we can merge these operations and further reduce the complexity to $O(n \log(n))$.

Entangled Fourier Basis: XY Correlation

In the standard 2D Fourier transform, the x and y coordinates are processed independently. For an image of size $2^n \times 2^n$ (i.e., square images with $m = n$), we apply QFT on the n row qubits and separately on the n column qubits. This independence assumption is often suboptimal for natural images where spatial correlations exist between rows and columns.

We propose an *entangled QFT basis* that introduces controlled-phase gates between x and y qubits after each layer of the QFT circuit. For the square case $m = n$, we use a *one-to-one* entanglement structure where each x qubit x_k is coupled with the corresponding y qubit y_k. The entanglement gate E_k has exactly the same form as the M gate defined in the previous section:

$$E_k = \begin{pmatrix} 1 & 0 & 0 & 0 \\ 0 & 1 & 0 & 0 \\ 0 & 0 & 1 & 0 \\ 0 & 0 & 0 & e^{i\varphi_k} \end{pmatrix} \tag{9}$$

acting on qubits (x_{n-k}, y_{n-k}), where φ_k is a learnable phase parameter. Similar to the M_k gate which multiplies a phase factor when both control and target qubits are in state $|1\rangle$, the entanglement gate E_k multiplies a phase $e^{i\varphi_k}$ when both $x_{n-k} = 1$ and $y_{n-k} = 1$. The key difference is that while M_k uses the fixed phase $\pi/2^{k-1}$ determined by the QFT structure, E_k uses a learnable phase φ_k that can be optimized to capture image-specific correlations.

The circuit structure for $n = 4$ qubits per dimension is shown below. Each row qubit x_k first passes through its QFT circuit (Hadamard gate H followed by controlled-phase gates M_j with other row qubits), and similarly for column qubits y_k. The entanglement gates E_k (shown as boxes connecting x and y qubit lines) are applied after the Hadamard layers, coupling the corresponding row and column qubits:

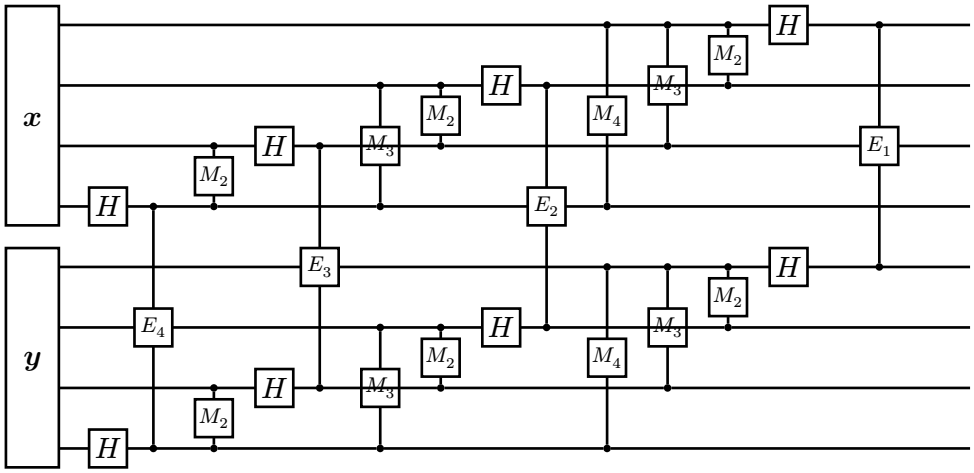

Summarizing the gate applications for each qubit:

- **Row qubit x_k**: Hadamard gate H, followed by controlled-phase gates M_j with qubits $x_0, ..., x_{k-1}$ (standard QFT structure), then entanglement gate E_{n-k} with column qubit y_k
- **Column qubit y_k**: Hadamard gate H, followed by controlled-phase gates M_j with qubits $y_0, ..., y_{k-1}$ (standard QFT structure), then entanglement gate E_{n-k} with row qubit x_k

For a square $2^n \times 2^n$ image encoded with n row qubits and n column qubits (total $2n$ qubits), we add exactly n entanglement gates $\{E_1, E_2, ..., E_n\}$, one for each pair of corresponding row/column qubits.

The total transformation becomes:

$$\mathcal{T}_{\text{entangled}} = U_{\text{entangle}} \cdot (F_n \otimes F_n) \tag{10}$$

where $U_{\text{entangle}} = \prod_{k=1}^{n} E_k$ is the product of all entanglement gates acting on qubit pairs (x_{n-k}, y_{n-k}), and F_n is the n-qubit QFT applied along each spatial dimension.

Key advantages of this approach:

- Captures diagonal features and cross-dimensional patterns common in natural images
- Maintains $O(n \log n)$ computational complexity in the number n of qubits per spatial dimension (equivalently $O(N \log N)$ for linear image size $N = 2^n$), matching the standard QFT
- Adds exactly n additional real-valued learnable parameters φ_k (one phase per qubit pair), i.e., $O(n)$ in n
- Reduces to standard 2D QFT when all entanglement phases $\varphi_k = 0$

Alternative Basis: Time Evolving Block Decimation (TEBD)

Time Evolving Block Decimation (TEBD) is a tensor network ansatz originally developed for simulating 1D quantum many-body systems. In our implementation, it employs a *ring topology* of nearest-neighbor controlled-phase gates preceded by Hadamard gates on each qubit. For image processing on a $2^n \times 2^n$ grid, the n row qubits and n column qubits each form an independent ring of controlled-phase gates.

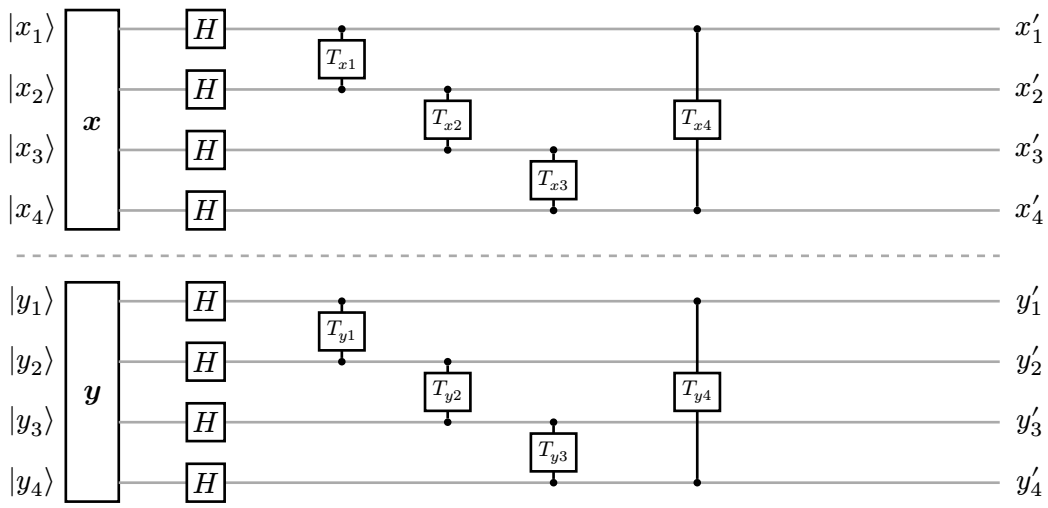

Figure 8: TEBD circuit for $n = 4$ row and column qubits with ring topology. Hadamard gates H are applied to all qubits, followed by nearest-neighbor controlled-phase gates T_{xk} (row ring) and T_{yk} (column ring). Wrap-around gates T_{x4} and T_{y4} close each ring.

Each two-qubit gate in the TEBD circuit is a parameterized controlled-phase gate acting on two adjacent qubits. In our implementation, we use $T_k = \mathrm{diag}(1, 1, 1, e^{i\varphi_k})$ with a single learnable phase φ_k per gate. More generally, common parameterization choices include:

1. **Full $U(4)$ unitary**: The most general form with 16 complex parameters constrained by unitarity ($UU^\dagger = I$). This lies on the unitary manifold $U(4)$.

2. **Hardware-efficient ansatz**: Decompose each two-qubit gate as single-qubit rotations followed by an entangling gate:

$$U_k = \big(R_z(\varphi_1)R_y(\theta_1) \otimes R_z(\varphi_2)R_y(\theta_2)\big) \cdot \mathrm{CZ} \cdot \big(R_z(\varphi_3)R_y(\theta_3) \otimes R_z(\varphi_4)R_y(\theta_4)\big) \tag{11}$$

   where $R_y(\theta) = \exp\big(-i\theta\frac{Y}{2}\big)$, $R_z(\varphi) = \exp\big(-i\varphi\frac{Z}{2}\big)$, and CZ is the controlled-Z gate. This uses 8 real parameters per gate.

3. **XX+YY+ZZ interaction**: Inspired by Hamiltonian simulation:

$$U_k = \exp(i(\alpha_k X \otimes X + \beta_k Y \otimes Y + \gamma_k Z \otimes Z)) \tag{12}$$

   with only 3 real parameters $(\alpha_k, \beta_k, \gamma_k)$ controlling the entanglement strength.

Direct evaluation of this tensor network takes $O(nL \cdot 4^2) = O(nL)$ operations for L layers. The parameter space consists of $\lfloor L/2 \rfloor \lfloor n/2 \rfloor + \lceil L/2 \rceil \lfloor (n-1)/2 \rfloor$ two-qubit gates (approximately $(n/2) \cdot L$ gates for large n). The total parameter manifold is:

$$\mathcal{M}_{\mathrm{TEBD}} = \prod_{k=1}^{|\mathrm{gates}|} U(4) \tag{13}$$

For Riemannian optimization, we optimize on this product of unitary manifolds using the same gradient descent approach as the QFT basis.

Alternative Basis: Multi-scale Entanglement Renormalization Ansatz (MERA)

The Multi-scale Entanglement Renormalization Ansatz (MERA) is a hierarchical tensor network that naturally captures *multi-scale correlations*. It consists of alternating layers of *disentanglers* (two-qubit

unitaries) and *isometries* (coarse-graining maps), forming a tree-like structure. For $n = 2^k$ qubits, MERA has k layers, with each layer reducing the number of effective qubits by half.

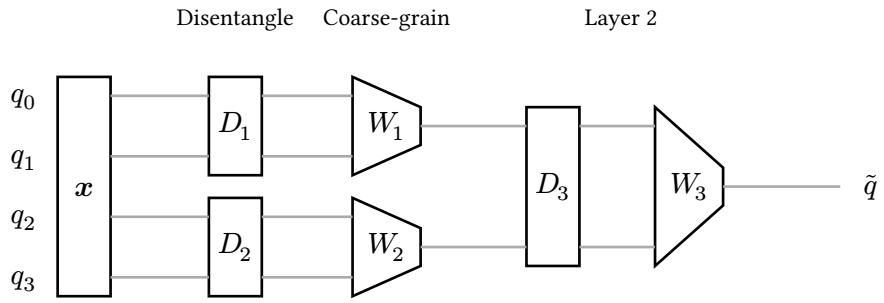

Figure 9: MERA circuit for $n = 4$ qubits: disentanglers D_k (rectangles) remove short-range entanglement, isometries W_k (trapezoids) perform 2-to-1 coarse-graining. Each layer halves the number of effective qubits.

In this diagram, there are two types of parameterized gates:

1. **Disentanglers** $D_k \in U(4)$: Parameterized 4×4 unitary matrices acting on two adjacent qubits before coarse-graining. Same parameterization options as TEBD gates (full $U(4)$, hardware-efficient, or XX+YY+ZZ).

2. **Isometries** $W_k : \mathbb{C}^4 \to \mathbb{C}^2$: Parameterized 2×4 matrices that map two qubits to one qubit (coarse-graining). They satisfy the isometry constraint $WW^\dagger = I_2$, lying on the Stiefel manifold $\mathrm{St}(2, 4)$. Parameterization options include:
   - **Full Stiefel**: Any 2×4 matrix with orthonormal rows, 8 real parameters
   - **Structured**: $W = \begin{pmatrix} \cos\theta & \sin\theta e^{i\varphi_1} & 0 & 0 \\ 0 & 0 & \cos\psi & \sin\psi e^{i\varphi_2} \end{pmatrix}$ with 4 real parameters (block-diagonal structure)

Direct evaluation of this tensor network takes $O(n)$ operations total, since each layer processes $O(2^{k-l})$ qubits at level l and there are $k = \log_2 n$ layers. For $n = 2^k$ input qubits, the parameter count is:
- Layer l: 2^{k-l-1} disentanglers + 2^{k-l-1} isometries
- Total: $\sum_{l=0}^{k-1} 2^{k-l-1} = n - 1$ disentanglers and $n - 1$ isometries

The total parameter manifold is:

$$\mathcal{M}_{\text{MERA}} = \left(\prod_{k=1}^{n-1} U(4) \right) \times \left(\prod_{k=1}^{n-1} \mathrm{St}(2, 4) \right) \tag{14}$$

For Riemannian optimization, we optimize on this product of unitary and Stiefel manifolds. The hierarchical structure naturally captures multi-scale features (edges $\longrightarrow$ textures $\longrightarrow$ objects), with only $O(\log n)$ depth for n qubits.

Learning a better Fourier basis

Observing that in this representation, tensor parameters can be tuned without affecting the computational complexity, e.g. the parameters in M_k and H. Can we find a transformation better than the Fourier basis? Or is Fourier basis already optimal for image processing?

Intuitively, the fourier basis is not optimal for image processing, because:
- the fourier basis assumes periodic boundary condition, which is not suitable for image processing.
- the 2d fourier basis assumes the X and Y coordinates are independent, which is not suitable for image processing.

Loss Functions for Basis Learning

L1 Norm Loss (Sparsity Regularization)

The L1 norm loss is defined as: $\mathcal{L}_{L1}(\boldsymbol{\theta}) = \sum_{i,j} |\mathcal{T}(\boldsymbol{\theta})(\boldsymbol{x})_{i,j}|$

This promotes **sparsity**: under compressed sensing theory, minimizing $\|\boldsymbol{y}\|_1$ approximates minimizing the ℓ_0 pseudo-norm $\|\boldsymbol{y}\|_0 = |\{i, j : \boldsymbol{y}_{i,j} \neq 0\}|$. The optimization drives the transform to concentrate energy in fewer frequency components.

Limitations: The L1 norm does not directly optimize reconstruction quality. The loss is independent of $\|\boldsymbol{x} - \mathcal{T}^{-1}(\text{truncate}(\boldsymbol{y}, k))\|_F^2$, so the sparsest transform may not yield the best reconstruction.

L2 Norm Loss

$\mathcal{L}_{L2}(\boldsymbol{\theta}) = \sum_{i,j} |\mathcal{T}(\boldsymbol{\theta})(\boldsymbol{x})_{i,j}|^2$

Encourages energy concentration with smoother gradients than L1, but less aggressive sparsity promotion.

MSE Reconstruction Loss

$\mathcal{L}_{\text{MSE}(\boldsymbol{\theta})} = \|\boldsymbol{x} - \mathcal{T}(\boldsymbol{\theta})^{-1}(\text{truncate}(\mathcal{T}(\boldsymbol{\theta})(\boldsymbol{x}), k))\|_F^2$

Directly optimizes reconstruction quality after top-k truncation. Requires computing the inverse transform.

Hybrid Loss

$\mathcal{L}_{\text{hybrid}(\boldsymbol{\theta})} = \alpha \mathcal{L}_{L1}(\boldsymbol{\theta}) + \beta \mathcal{L}_{\text{MSE}(\boldsymbol{\theta})}$

Balances sparsity promotion with reconstruction quality.

Sparse Basis in Parametric QFT

Motivation

A **sparse basis** is a transform basis in which a signal can be represented with few non-zero coefficients. For compression, the goal is to find a basis $\mathcal{T}$ such that $\boldsymbol{y} = \mathcal{T}(\boldsymbol{x})$ has most energy concentrated in a small number of components: $\|\boldsymbol{y}\|_0 \ll \dim(\boldsymbol{y})$.

Classical transforms (FFT, DCT) provide fixed bases optimized for specific signal classes. The parametric QFT learns a **data-adaptive sparse basis** by optimizing circuit parameters $\boldsymbol{\theta} \in M$.

QFT as Sparse Basis Transform

The QFT circuit implements a unitary transform $\mathcal{T}(\boldsymbol{\theta}) : \mathbb{C}^{2^m \times 2^n} \to \mathbb{C}^{2^m \times 2^n}$ parameterized by Hadamard gates $H \in U(2)$ and controlled phase gates $M_k \in U(1)^4$. The standard QFT (fixed parameters) equals the classical DFT. Making parameters learnable on the unitary manifold M searches for a transform with better sparsity for specific inputs.

Frequency-Dependent Truncation

For compression, low-frequency components carry structural information while high-frequency components capture fine details. The truncation uses a weighted score:

$s_{i,j} = |\boldsymbol{y}_{i,j}| \cdot \left(1 + w_{i,j}\right)$, where $w_{i,j} = 1 - \frac{d_{i,j}}{2d_{\max}}$

Here $d_{i,j} = \sqrt{(i - c_i)^2 + \left(j - c_j\right)^2}$ is the frequency distance from the DC component, and $d_{\max}$ is the maximum distance. This weighting favors low-frequency components.

Sparse Basis Learning Objective

The optimization finds parameters $\boldsymbol{\theta}^* = \arg\min_{\boldsymbol{\theta} \in M} \mathcal{L}(\boldsymbol{\theta})$ where:

1. **L1 Sparsity**: $\mathcal{L}_{L1} = \|\mathcal{T}(\boldsymbol{\theta})(\boldsymbol{x})\|_1$ directly promotes sparse representations
2. **MSE Reconstruction**: $\mathcal{L}_{\text{MSE}} = \|\boldsymbol{x} - \mathcal{T}^{-1}(\text{topk}(\mathcal{T}(\boldsymbol{x}), k))\|_F^2$ optimizes for reconstruction quality after truncation

The learned basis $\mathcal{T}(\boldsymbol{\theta}^*)$ is signal-adaptive: unlike fixed DCT/FFT bases, it can exploit structure specific to the input data (e.g., textures, edges in images).

Comparison with Fixed Bases

Property	Fixed Basis (FFT/DCT)	Parametric QFT
Adaptivity	None (fixed transform)	Data-dependent optimization
Sparsity	Optimal for periodic/smooth signals	Learned for specific input
Computation	$O(N \log N)$	$O(N \log N)$ + training cost
Unitarity	Preserved	Preserved (manifold constraint)

Riemannian Optimization on Unitary Manifolds

The trainable parameters of our quantum circuits—Hadamard gates H, controlled-phase gates M_k, and TEBD gates T_k—live on Riemannian manifolds rather than Euclidean space. Standard gradient-based optimizers cannot be applied directly because Euclidean updates would violate the unitarity constraint. We employ *Riemannian optimization* that respects the manifold geometry.

Manifold Structure

Our circuits involve two types of parameter manifolds:

1. **Unitary manifold $\boldsymbol{U(2)}$**: Hadamard-like gates are 2×2 unitary matrices satisfying $UU^\dagger = I$. The tangent space at U is

$$T_U U(2) = \{US : S^\dagger = -S\} \tag{15}$$

   where S is skew-Hermitian.

2. **Product of unit circles $\boldsymbol{U(1)^4}$**: Controlled-phase gates are 2×2 diagonal matrices with entries on the unit circle $|z_i| = 1$. The tangent space at z is

$$T_z U(1)^4 = \{i\theta \cdot z : \theta \in \mathbb{R}^4\} \tag{16}$$

   corresponding to purely imaginary scalings of each component.

Riemannian Gradient

Given a Euclidean gradient $\nabla_E f$ obtained via automatic differentiation, we project it onto the tangent space to obtain the Riemannian gradient:

- **For $\boldsymbol{U(2)}$**: $\text{grad } f(U) = U \cdot \text{skew}(U^\dagger \nabla_E f)$, where $\text{skew}(A) = (A - A^\dagger)/2$.
- **For $\boldsymbol{U(1)^4}$**: $\text{grad } f(z) = i \cdot \text{Im}(\overline{z} \circ \nabla_E f) \circ z$, applied element-wise.

Retraction

After computing a descent direction $\xi \in T_x \mathcal{M}$, we map back to the manifold using a *retraction*:

- **QR retraction for $\boldsymbol{U(2)}$**: Given $U + \alpha\xi = QR$ (QR decomposition), set $R_U(\alpha\xi) = Q \cdot \text{diag}(\text{sgn}(R_{ii}))$. The sign correction ensures we remain on the correct connected component.

- **Normalization for $U(1)^4$**: $R_z(\alpha\xi) = (z + \alpha\xi)/\ |z + \alpha\xi|$, applied element-wise to project back onto the unit circle.

Riemannian Gradient Descent
The basic optimization algorithm iterates:

$$x_{t+1} = R_{x_t}(-\eta \cdot \text{grad}\ f(x_t)) \tag{17}$$

where $\eta > 0$ is the learning rate and R is the retraction.

Riemannian Adam
For faster convergence, we implement the Riemannian Adam optimizer (Bécigneul & Ganea, 2019) that extends classical Adam to manifolds. Let $g_t = \text{grad}\ f(x_t)$ be the Riemannian gradient at step t. The algorithm maintains per-parameter first and second moment estimates:

$$\begin{aligned} m_t &= \beta_1 m_{t-1} + (1 - \beta_1) g_t \\ v_t &= \beta_2 v_{t-1} + (1 - \beta_2)\ |g_t|^2 \end{aligned} \tag{18}$$

with bias-corrected estimates $\hat{m}_t = m_t/(1 - \beta_1^t)$ and $\hat{v}_t = v_t/(1 - \beta_2^t)$. The update direction is:

$$d_t = \hat{m}_t / \left(\sqrt{\hat{v}_t} + \varepsilon\right) \tag{19}$$

and the new iterate is obtained by retraction:

$$x_{t+1} = R_{x_t}(-\eta \cdot d_t) \tag{20}$$

After retraction, the first moment m_t must be *parallel transported* from the tangent space at x_t to the tangent space at x_{t+1}. We use projection-based transport as a first-order approximation:

$$\Gamma_{x_t \to x_{t+1}}(m_t) = \text{proj}_{T_{x_{t+1}}\mathcal{M}}(m_t) \tag{21}$$

which re-projects the old momentum onto the new tangent space. For $U(2)$ this is $U_{t+1} \cdot \text{skew}\left(U_{t+1}^\dagger m_t\right)$; for $U(1)^4$ this re-applies the tangent projection at the new point.