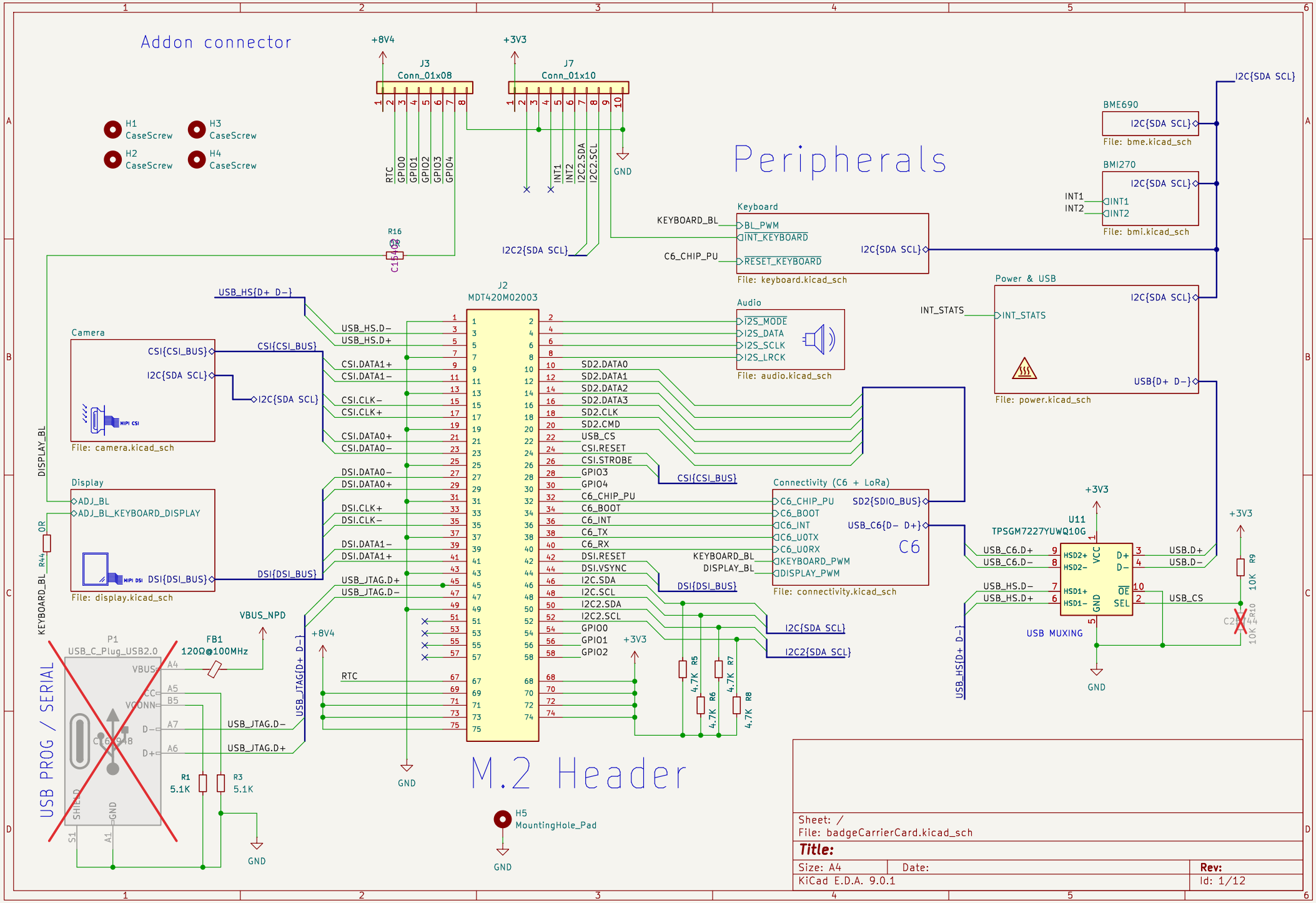

Addon connector
Peripherals
M.2 Header
USB PROG / SERIAL
J3
Conn_01x08
J7
Conn_01x10
J2
MDT420M02003
H1 CaseScrew
H2 CaseScrew
H3 CaseScrew
H4 CaseScrew
H5 MountingHole_Pad
Keyboard
File: keyboard.kicad_sch
BME690
File: bme.kicad_sch
BMI270
File: bmi.kicad_sch
Power & USB
File: power.kicad_sch
Audio
File: audio.kicad_sch
Camera
File: camera.kicad_sch
Display
File: display.kicad_sch
Connectivity (C6 + LoRa)
File: connectivity.kicad_sch
C6
U11
TPSGM7227YUWQ10G
USB MUXING
P1
USB_C_Plug_USB2.0
FB1
120Ω@100MHz
VBUS_NPD
R1
5.1K
R3
5.1K
R16
C15408
R44
0R
R9
10K
R10
10K
C2
R5
4.7K
R6
4.7K
R7
4.7K
R8
4.7K
+8V4
+3V3
GND
Sheet: /
File: badgeCarrierCard.kicad_sch
Title:
Size: A4
Date:
Rev:
KiCad E.D.A. 9.0.1
Id: 1/12

2 Cell Charger & Balancer

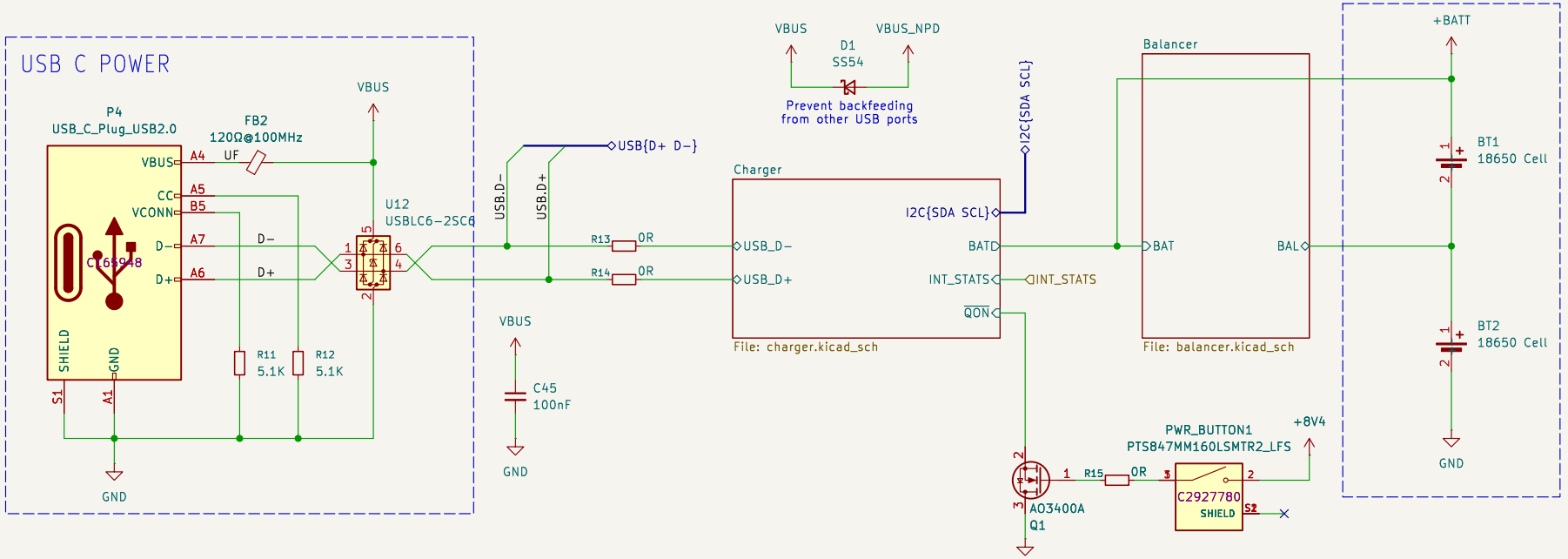

Sheet: /Power & USB/		
File: power.kicad_sch		
Title:		
Size: A4	Date:	**Rev:**
KiCad E.D.A. 9.0.1		Id: 2/12

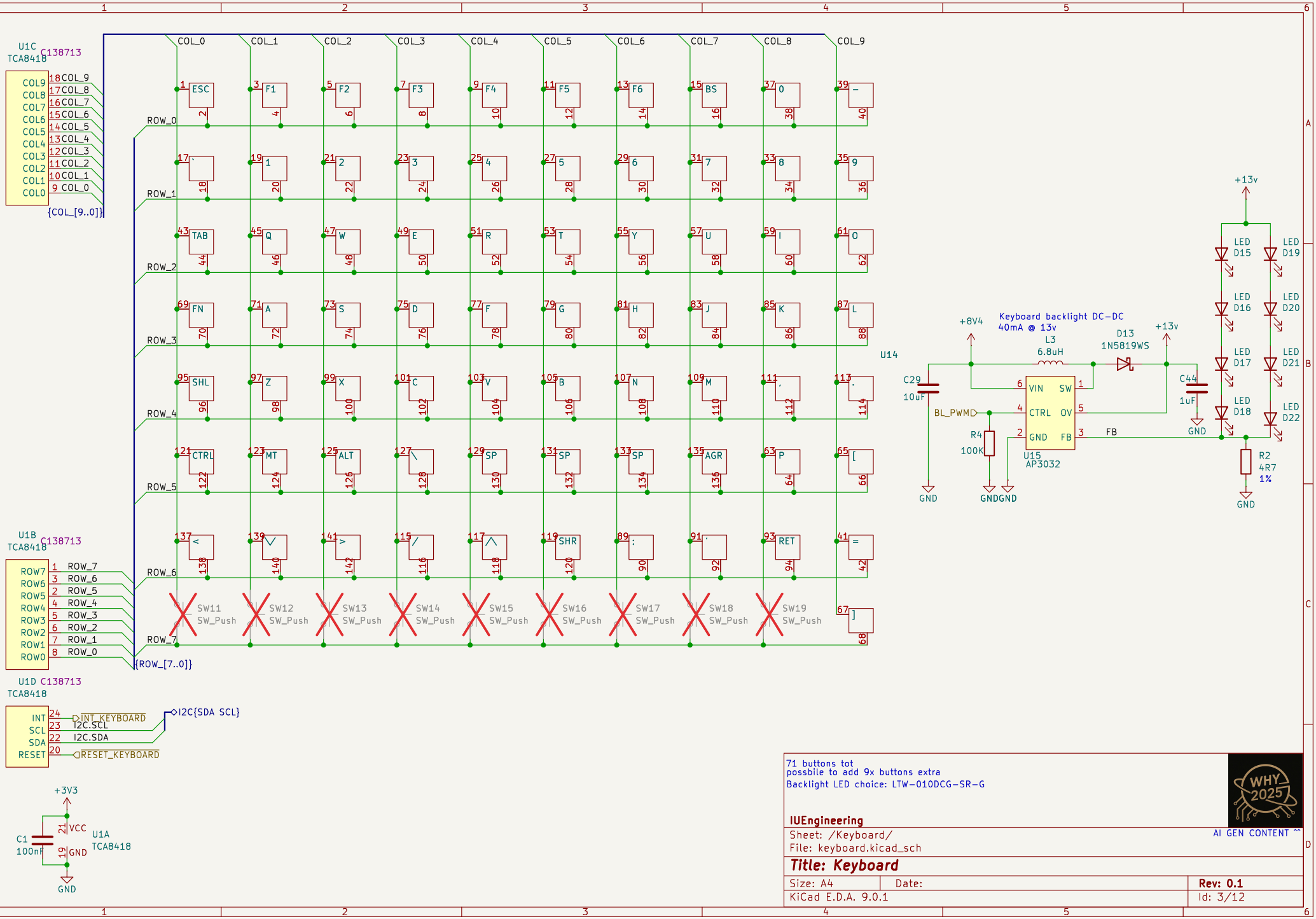
U1C
TCA8418
C138713
COL9
COL8
COL7
COL6
COL5
COL4
COL3
COL2
COL1
COL0
{COL_[9..0]}
COL_0
COL_1
COL_2
COL_3
COL_4
COL_5
COL_6
COL_7
COL_8
COL_9
ROW_0
ROW_1
ROW_2
ROW_3
ROW_4
ROW_5
ROW_6
ROW_7
ESC
F1
F2
F3
F4
F5
F6
BS
0
-
`
1
2
3
4
5
6
7
8
9
TAB
Q
W
E
R
T
Y
U
I
O
FN
A
S
D
F
G
H
J
K
L
SHL
Z
X
C
V
B
N
M
,
.
CTRL
MT
ALT
\
SP
SP
SP
AGR
P
[
<
/
>
/
SHR
:
'
RET
=
]
SW11 SW_Push
SW12 SW_Push
SW13 SW_Push
SW14 SW_Push
SW15 SW_Push
SW16 SW_Push
SW17 SW_Push
SW18 SW_Push
SW19 SW_Push
U1B
TCA8418
C138713
ROW7
ROW6
ROW5
ROW4
ROW3
ROW2
ROW1
ROW0
{ROW_[7..0]}
U1D C138713
TCA8418
INT
SCL
SDA
RESET
INT_KEYBOARD
I2C.SCL
I2C.SDA
RESET_KEYBOARD
I2C{SDA SCL}
+3V3
C1
100nF
VCC
GND
U1A
TCA8418
U14
+8V4
Keyboard backlight DC-DC
40mA @ 13v
L3
6.8uH
D13
1N5819WS
+13v
C29
10uF
BL_PWM
R4
100K
VIN
SW
CTRL
OV
GND
FB
U15
AP3032
C44
1uF
FB
GND
GNDGND
LED D15
LED D16
LED D17
LED D18
LED D19
LED D20
LED D21
LED D22
R2
4R7
1%
71 buttons tot
possbile to add 9x buttons extra
Backlight LED choice: LTW-010DCG-SR-G
IUEngineering
AI GEN CONTENT
Sheet: /Keyboard/
File: keyboard.kicad_sch
Title: Keyboard
Size: A4
Date:
Rev: 0.1
KiCad E.D.A. 9.0.1
Id: 3/12

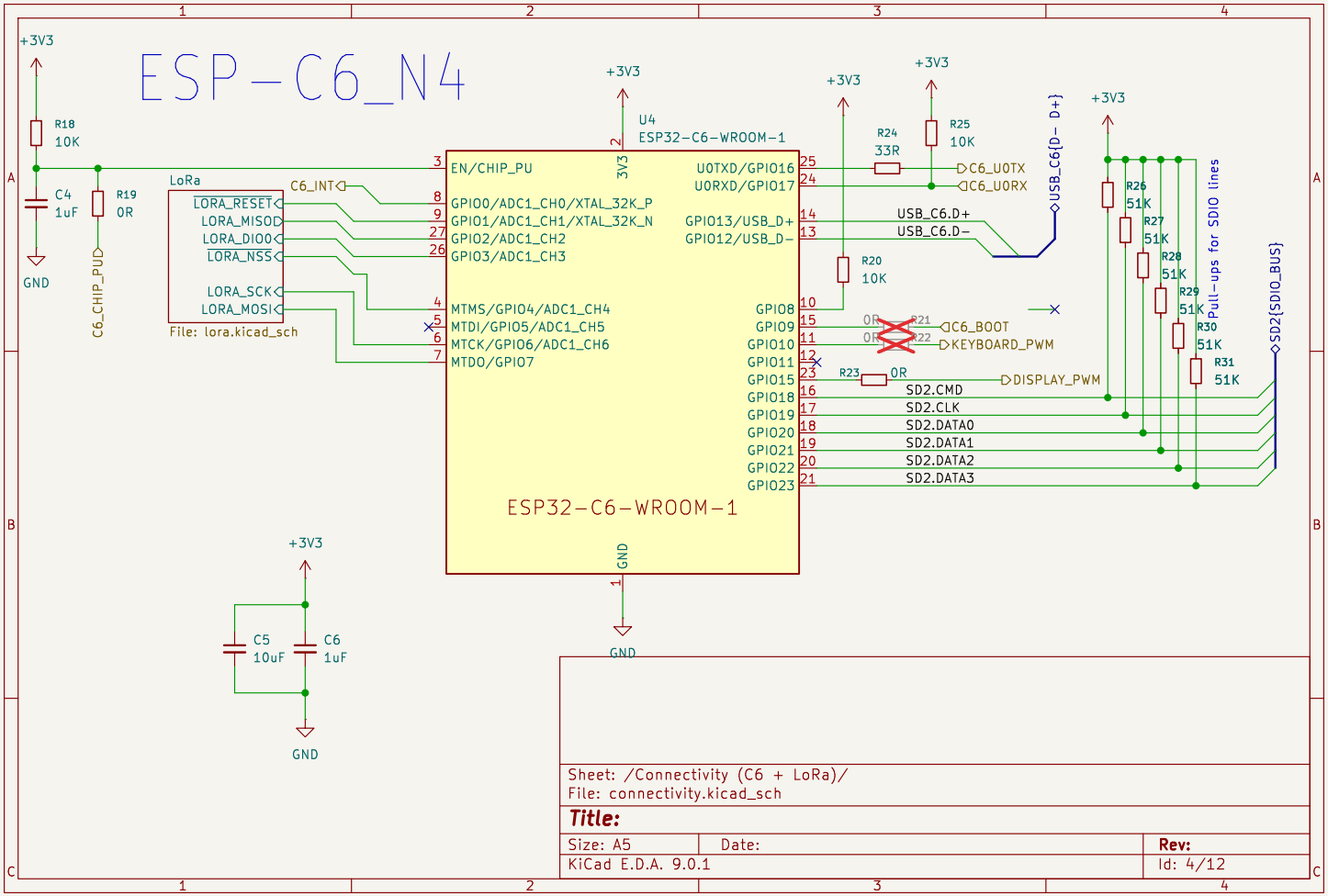
ESP-C6_N4
+3V3
R18
10K
C4
1uF
GND
R19
0R
C6_CHIP_PUD
LoRa
C6_INT
LORA_RESET
LORA_MISO
LORA_DIO0
LORA_NSS
LORA_SCK
LORA_MOSI
File: lora.kicad_sch
U4
ESP32-C6-WROOM-1
3V3
EN/CHIP_PU
GPIO0/ADC1_CH0/XTAL_32K_P
GPIO1/ADC1_CH1/XTAL_32K_N
GPIO2/ADC1_CH2
GPIO3/ADC1_CH3
MTMS/GPIO4/ADC1_CH4
MTDI/GPIO5/ADC1_CH5
MTCK/GPIO6/ADC1_CH6
MTDO/GPIO7
U0TXD/GPIO16
U0RXD/GPIO17
GPIO13/USB_D+
GPIO12/USB_D-
GPIO8
GPIO9
GPIO10
GPIO11
GPIO15
GPIO18
GPIO19
GPIO20
GPIO21
GPIO22
GPIO23
ESP32-C6-WROOM-1
GND
R24
33R
R25
10K
C6_U0TX
C6_U0RX
USB_C6{D- D+}
USB_C6.D+
USB_C6.D-
R20
10K
R21
0R
R22
0R
C6_BOOT
KEYBOARD_PWM
R23
0R
DISPLAY_PWM
SD2.CMD
SD2.CLK
SD2.DATA0
SD2.DATA1
SD2.DATA2
SD2.DATA3
R26
51K
R27
51K
R28
51K
R29
51K
R30
51K
R31
51K
Pull-ups for SDIO lines
SD2{SDIO_BUS}
C5
10uF
C6
1uF
Sheet: /Connectivity (C6 + LoRa)/
File: connectivity.kicad_sch
Title:
Size: A5
Date:
Rev:
KiCad E.D.A. 9.0.1
Id: 4/12

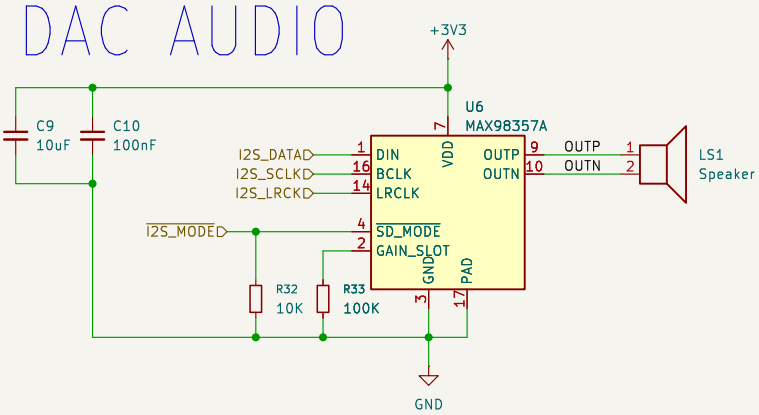

Sheet: /Audio/		
File: audio.kicad_sch		
Title:		
Size: A5	Date:	**Rev:**
KiCad E.D.A. 9.0.1		Id: 6/12

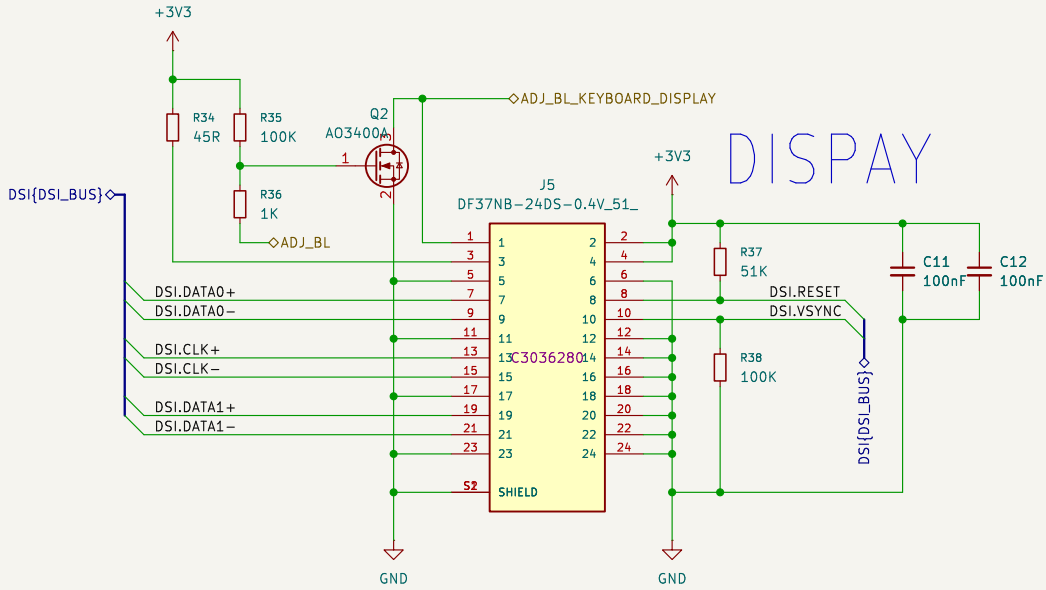

Sheet: /Display/		
File: display.kicad_sch		
Title:		
Size: A5	Date:	**Rev:**
KiCad E.D.A. 9.0.1		Id: 7/12

BME690

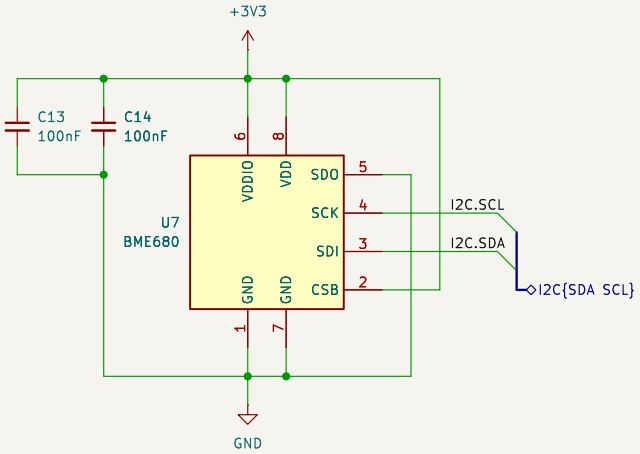

Sheet: /BME690/ File: bme.kicad_sch		
Title:		
Size: A5	Date:	**Rev:**
KiCad E.D.A. 9.0.1		Id: 8/12

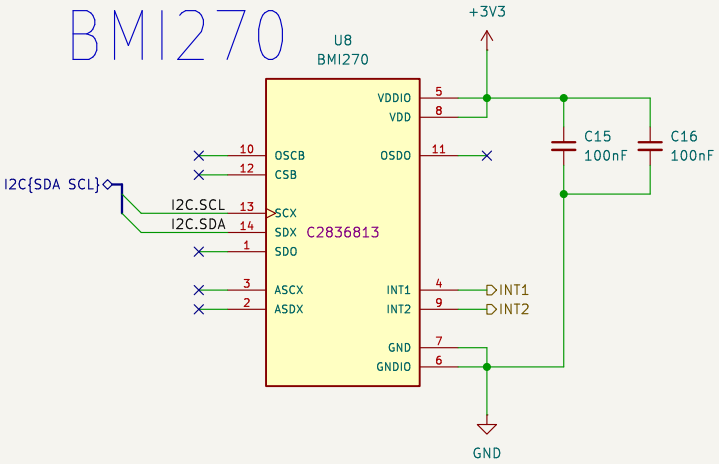

Sheet: /BMI270/		
File: bmi.kicad_sch		
Title:		
Size: A5	Date:	**Rev:**
KiCad E.D.A. 9.0.1		Id: 9/12

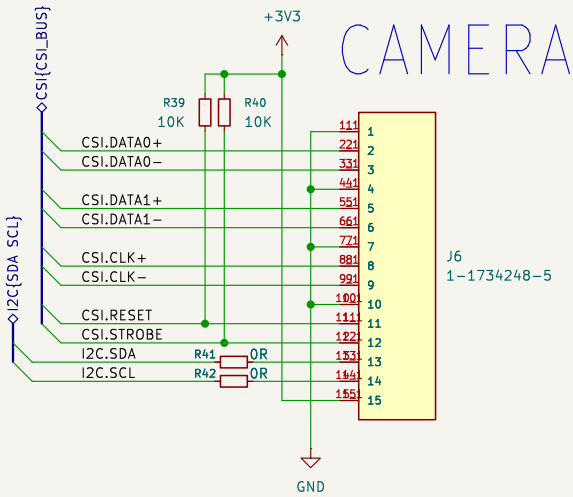

Sheet: /Camera/ File: camera.kicad_sch		
Title:		
Size: A5	Date:	**Rev:**
KiCad E.D.A. 9.0.1		Id: 10/12

LORA

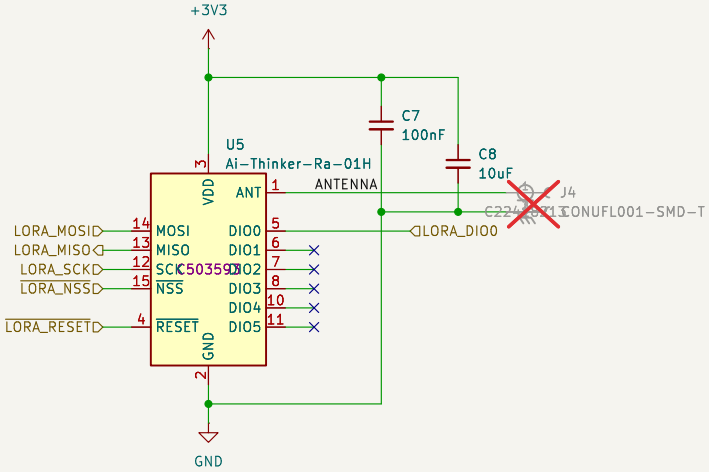

Sheet: /Connectivity (C6 + LoRa)/LoRa/		
File: lora.kicad_sch		
Title:		
Size: A5	Date:	**Rev:**
KiCad E.D.A. 9.0.1		Id: 5/12

VBUS	2-3	P	**Charger Input Voltage –** The power input terminal of the charger. An input current sensing circuit is connected between VBUS and PMID. The recommended capacitors at VBUS are 2 pieces of 10μF and one piece of 0.1μF ceramic capacitors. Place the 0.1μF ceramic capacitor as close as possible to the charger IC.

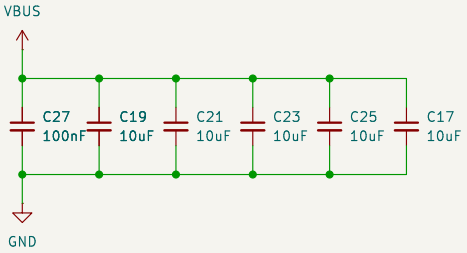

PMID	29	P	**Q1 MOSFET Drain Connection –** An internal N-channel high side MOSFET (Q1) is connected between PMID and SW1 with drain on PMID and source on SW1. The recommended capacitors at PMID are 3 pieces of 10μF and one piece of 0.1μF ceramic capacitors. Place the 0.1μF ceramic capacitor as close as possible to the charger IC.

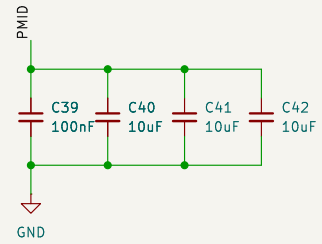

SYS	25	P	**The Charger Output Voltage to System –** The internal N-channel high side MOSFET (Q4) is connected between SYS and SW2 with drain on SYS and source on SW2. The recommended capacitors at SYS are 5 pieces of 10μF and one piece of 0.1μF ceramic capacitors. Place the 0.1μF ceramic capacitor as close as possible to the charger IC.

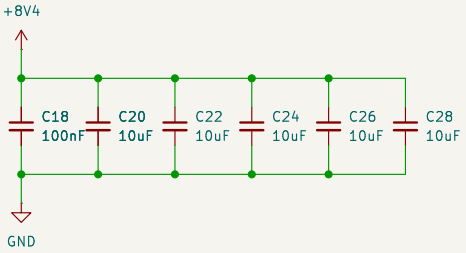

BAT	22-23	P	**The Battery Charging Power Connection –** Connect to the positive terminal of the battery pack. The internal charging current sensing circuit is connected between SYS and BAT. The recommended capacitors at BAT are 2 pieces of 10μF ceramic capacitors.

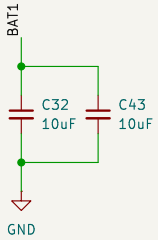

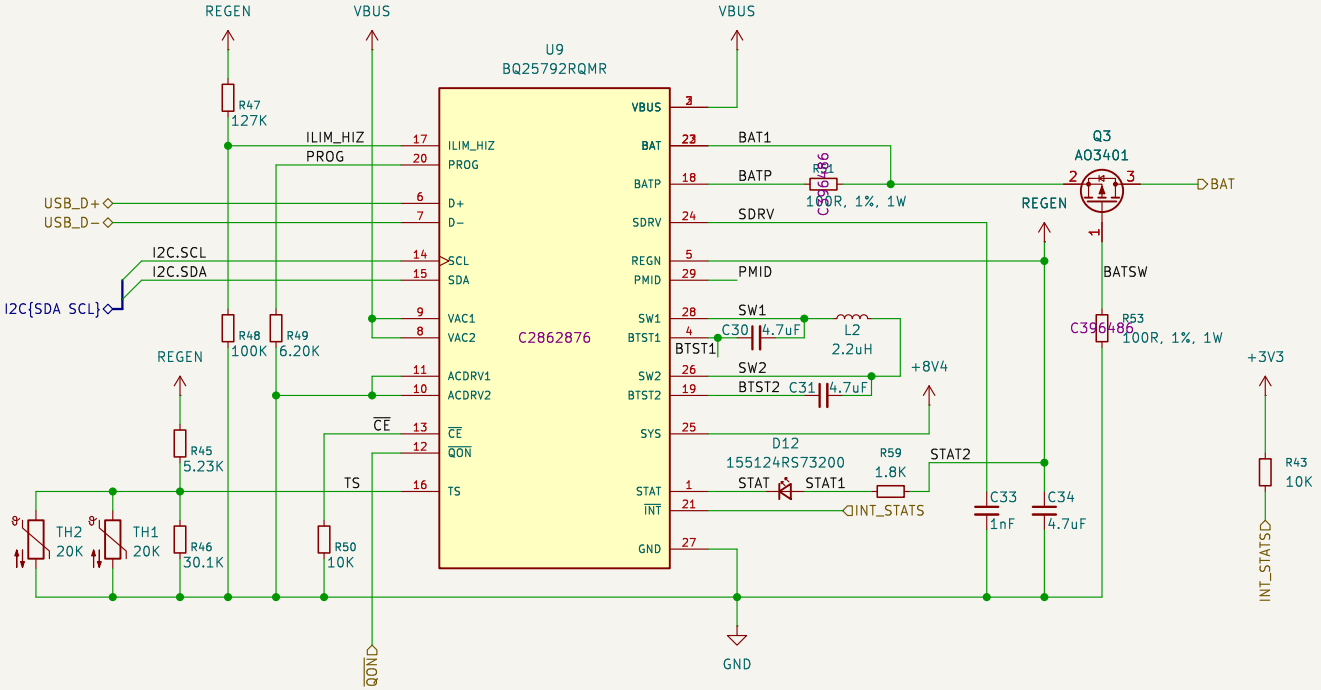

Sheet: /Power & USB/Charger/
File: charger.kicad_sch

Title:

Size: A4 | Date: | **Rev:**
KiCad E.D.A. 9.0.1 | Id: 11/12

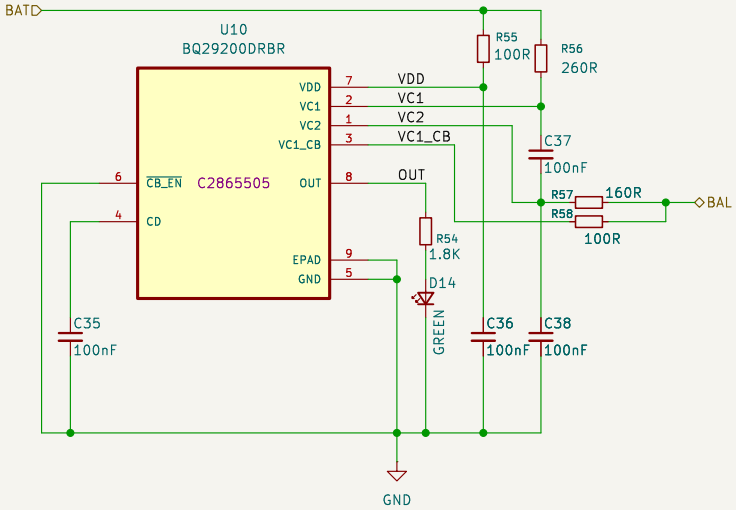

Sheet: /Power & USB/Balancer/		
File: balancer.kicad_sch		
Title:		
Size: A5	Date:	**Rev:**
KiCad E.D.A. 9.0.1		Id: 12/12