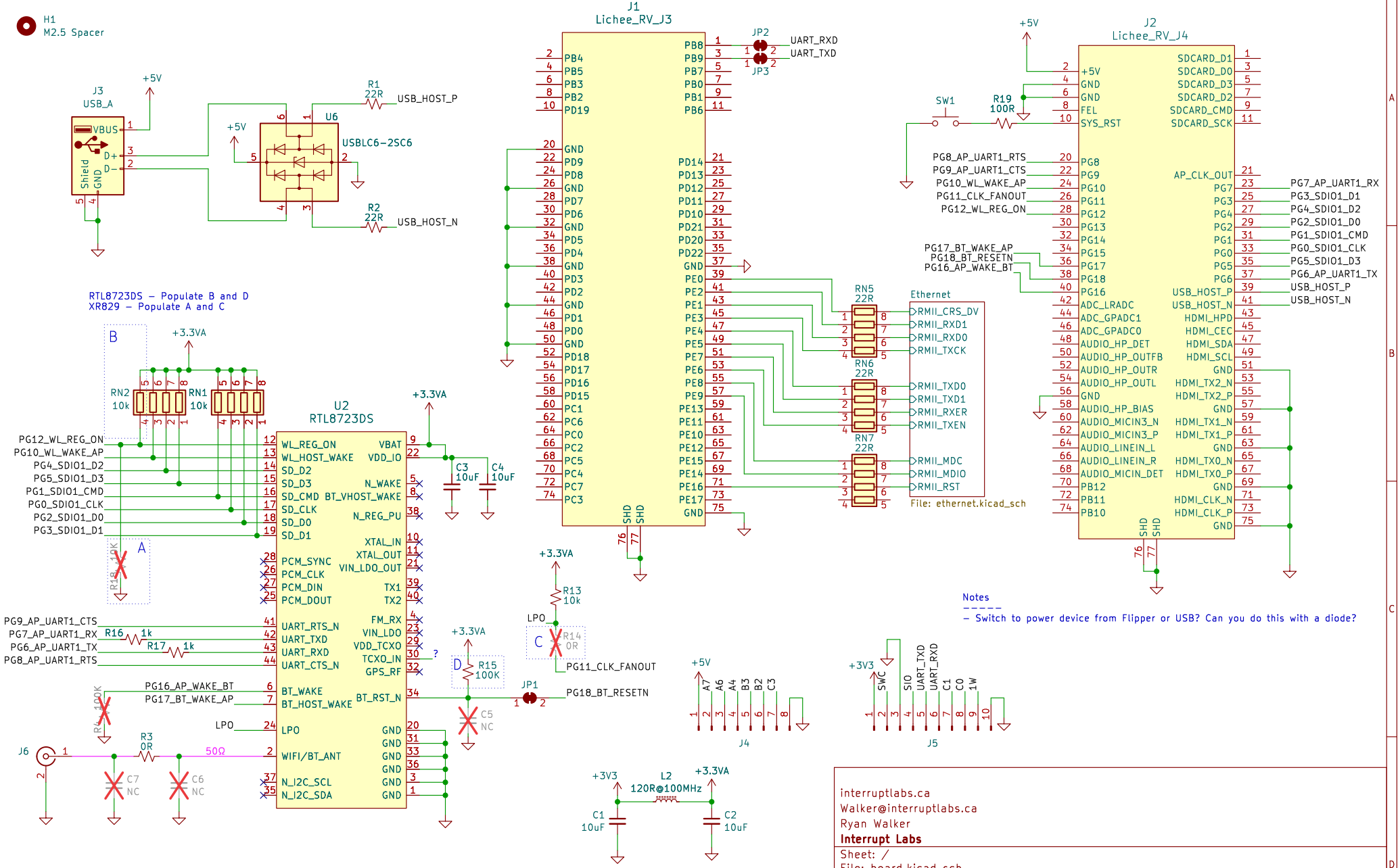

interruptlabs.ca
Walker@interruptlabs.ca
Ryan Walker
Interrupt Labs

Sheet: /
File: board.kicad_sch

Title: Flipper Blackhat

Size: A4	Date:	Rev:
KiCad E.D.A. kicad 7.0.7		Id: 1/2

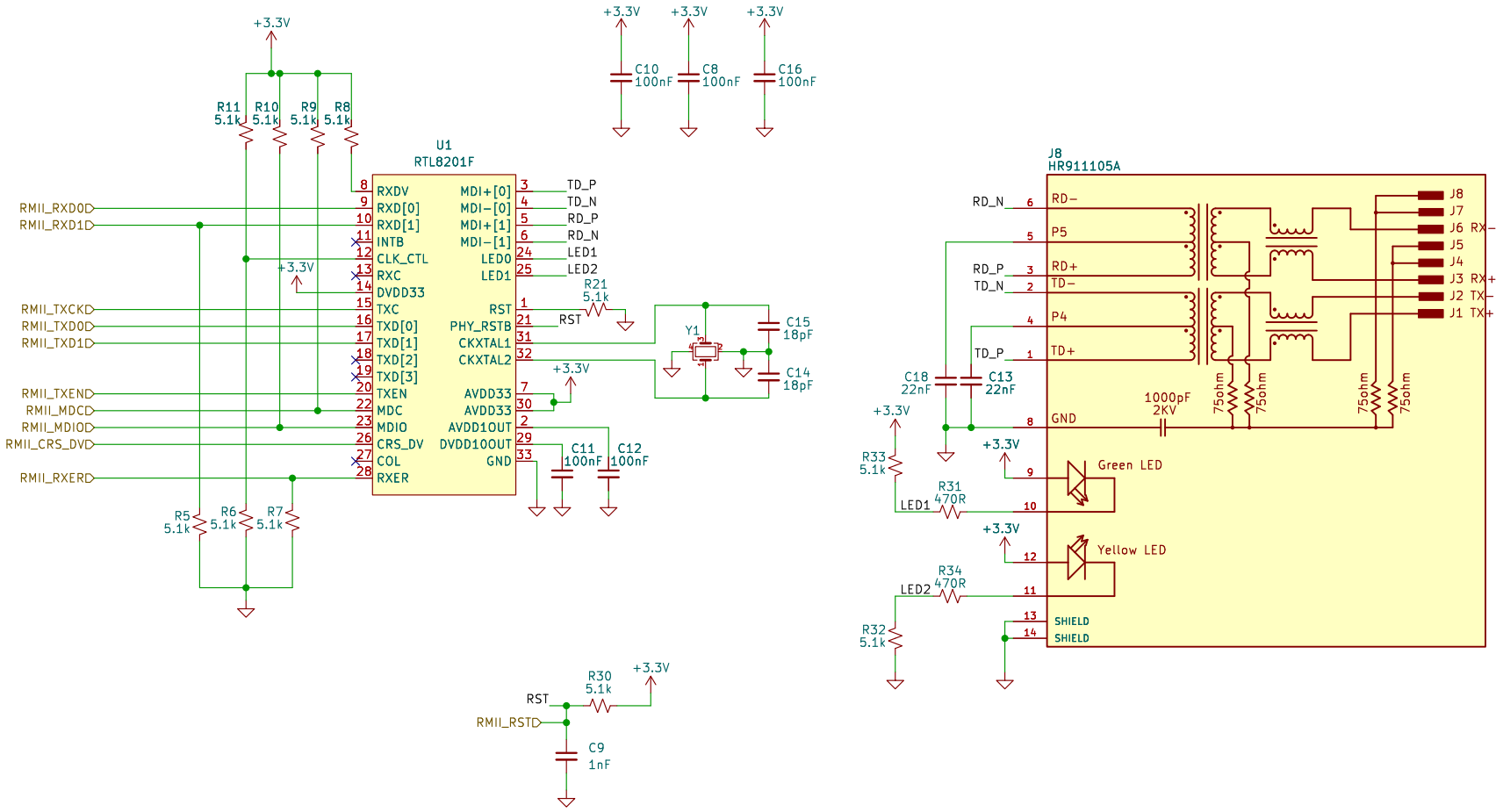

Walker@interruptlabs.ca
Ryan Walker
Interrupt Labs

Sheet: /Ethernet/
File: ethernet.kicad_sch

Title: Flipper Blackhat

Size: A4	Date: 2024-01-09	**Rev: R0.1**
KiCad E.D.A. kicad 7.0.7		Id: 2/2