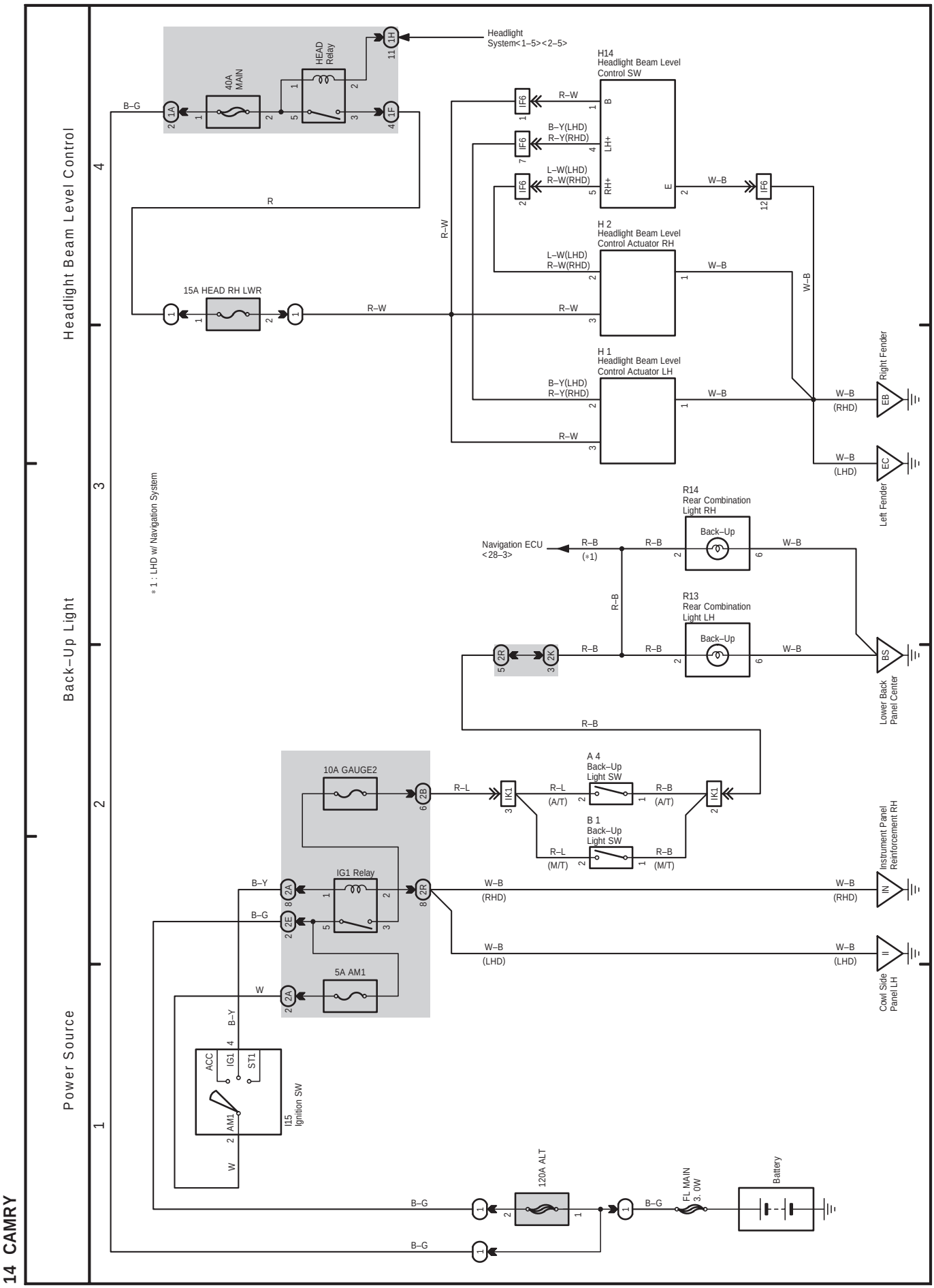
14 CAMRY
Power Source
Back–Up Light
Headlight Beam Level Control
Headlight System<1–5><2–5>
HEAD Relay
40A MAIN
B–G
R
15A HEAD RH LWR
R–W
H14 Headlight Beam Level Control SW
B–Y(LHD) R–Y(RHD)
L–W(LHD) R–W(RHD)
W–B
H 2 Headlight Beam Level Control Actuator RH
H 1 Headlight Beam Level Control Actuator LH
W–B (RHD)
W–B (LHD)
Right Fender
Left Fender
R14 Rear Combination Light RH
R13 Rear Combination Light LH
Back–Up
Navigation ECU <28–3>
R–B (*1)
Lower Back Panel Center
* 1 : LHD w/ Navigation System
10A GAUGE2
R–L
A 4 Back–Up Light SW
B 1 Back–Up Light SW
R–L (A/T)
R–B (A/T)
R–L (M/T)
R–B (M/T)
IG1 Relay
B–Y
W
5A AM1
ACC
IG1
ST1
AM1
I15 Ignition SW
Instrument Panel Reinforcement RH
Cowl Side Panel LH
120A ALT
FL MAIN 3. 0W
Battery