View Article Online / Journal Homepage / Table of Contents for this issue

PCCP

Free jet rotational spectrum of propylene oxide–krypton and modelling and *ab initio* calculations for propylene oxide–rare gas dimers†

Susana Blanco,‡[a] Sonia Melandri,[a] Assimo Maris,[a] Walther Caminati,*[a] Biagio Velino[b] and Zbigniew Kisiel[c]

[a] *Dipartimento di Chimica "G. Ciamician" dell'Università, Via Selmi 2, I-40126 Bologna, Italy. E-mail: caminati@ciam.unibo.it; Fax: +39-051-2099456; Tel: +39-051-2099480*

[b] *Dipartimento di Chimica Fisica e Inorganica dell'Università, Viale Risorgimento 4, I-40136 Bologna, Italy*

[c] *Institute of Physics, Polish Academy of Sciences, Al. Lotników 32/46, 02-668 Warszawa, Poland*

Received 10th January 2003, Accepted 17th February 2003
First published as an Advance Article on the web 26th February 2003

Published on 26 February 2003. Downloaded by Michigan State University on 20/01/2016 14:42:58.

The rotational spectra of propylene oxide-^{84}Kr and propylene oxide-^{86}Kr have been measured by free jet millimetre-wave absorption spectroscopy. The preferred experimentally derived conformation of the complex is supported by results obtained with a simple distributed polarisability model and by *ab initio* calculations. The dissociation energy of the complex has been estimated, from the D_J centrifugal distortion constant, to be *ca.* 3.7 kJ mol^{-1}, which compares with 3.3 kJ mol^{-1} from the model. Modelling and *ab initio* calculations have also been performed for the related propylene oxide–Ne and propylene oxide–Ar complexes, and led to a re-assignment of their absolute energy minima. The results obtained for the three propylene oxide–rare gas atom dimers are compared.

Introduction

The combination of rotationally resolved spectroscopy and free jet techniques[1] allowed for the observation of many van der Waals complexes between a rare gas atom and an organic molecule.[2] Very few reports concern, however, complexes between an organic molecule and a krypton atom; they are: pyridine–Kr,[3] benzene–Kr,[4] cyclopropane–Kr,[5] 2,5-dihydrofuran–Kr[6] and oxirane–Kr.[7] In all of them the Kr atom is firmly located on one side of the molecular ring and no tunnelling features, associated with the motion of Kr between the two sides of the rings, have been observed.

All of the partner molecules of Kr mentioned above have at least C_{2v} symmetry and therefore two planes of symmetry. When these elements of symmetry are removed, for example by replacing an H atom of oxirane with a methyl group, a conformational equilibrium can take place. So propylene oxide–Kr (henceforth abbreviated to PRO-Kr) can exist, depending on the position of Kr with respect to the methyl group, in various forms, the most plausible of which are shown in Fig. 1. The present investigation aims to establish which one of these species is the global minimum.

It is, in addition, of some interest to compare the results for PRO-Kr with those obtained for the analogous complexes of PRO with Ne (ref. 8) and Ar (ref. 9) with respect to geometry and energy changes.

Experimental

The Stark and pulse modulated free jet absorption millimetre-wave spectrometer used in this study has already been

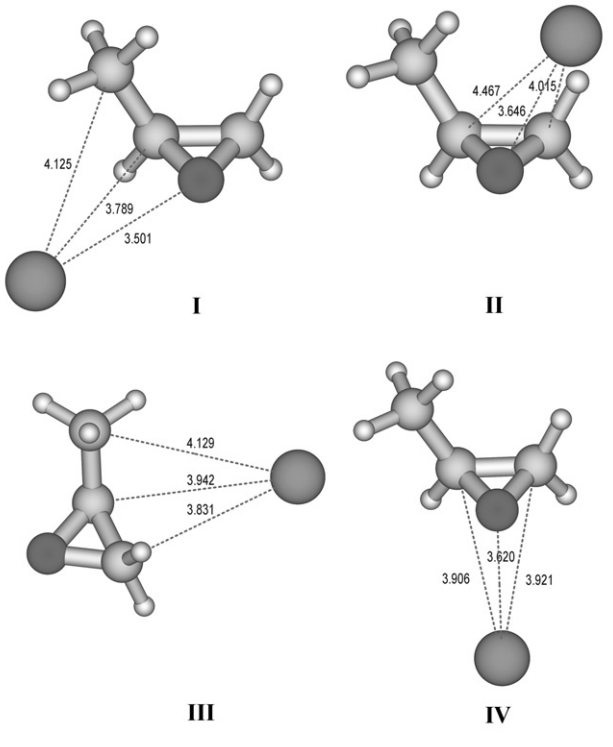

Fig. 1 The most plausible conformers of PRO-Kr, labelled in the order of increasing MP2 level energy.

† Electronic supplementary information (ESI) available: Tables S1 and S2: Experimental transition frequencies of PRO···^{84}Kr and PRO···^{86}Kr complexes. See http://www.rsc.org/suppdata/cp/b3/b300386h/

‡ Permanent address: Departamento de Química-Física, Facultad de Ciencias, Universidad de Valladolid, E-47005 Valladolid, Spain.

This journal is © The Owner Societies 2003

View Article Online

Published on 26 February 2003. Downloaded by Michigan State University on 20/01/2016 14:42:58.

described elsewhere.[10,11] A sample of PRO was purchased from Aldrich and was used without further purification. The adduct was formed by expanding a mixture of *ca.* 1% of PRO in Kr from *ca.* 1 bar to about 5×10^{-3} mbar through a pulsed nozzle (repetition rate 5 Hz) with a diameter of 0.2 mm, reaching an estimated "rotational" temperature of about 5–10 K.

Plausible conformations of PRO-Kr

Previous reports on the rotational spectra of complexes of PRO with a rare gas (RG), PRO-Ar and PRO-Ne, suggested the *syn* conformer (corresponding to species **II** in Fig. 1) to be the most stable species. This estimate was made by assuming the configuration of the RG to be as in oxirane–RG,[7,12,13] but with two possibilities, corresponding to RG on the same side (*syn*) or on the opposite side (*anti*) with respect to the methyl group. The experimental rotational constants matched satisfactorily those of the *syn* conformer. Some discrepancies between the experimental and calculated values of planar moments of inertia and of substitution coordinates were noted, which were attributed, however, to the RG large amplitude motions.

In the case of PRO-Kr, discrepancies of this type were even worse than noted before, so that we decided to investigate systematically the minima possible on the van der Waals potential energy surface.

For this purpose we decided to use the simple distributed polarisability model (DPM)[14] followed by *ab initio* calculations.

The DPM calculation was performed by using the computer program RGDMIN.[15] The geometry of PRO was fixed to the r_0 structure[16] and the distance (R_{CM}) between its center of mass (CM) and the rare gas was optimised in the full range $\theta = 0$–$180°$, $\varphi = 0$–$360°$ with steps $\Delta\varphi = \Delta\theta = 10°$. R_{CM}, θ and φ are the spherical coordinates shown in Fig. 2. Nine local minima were found on the 2D-potential energy surface. The values of the energies and of the three R_{CM}, θ and φ values for each minimum are given in Table 1, while Fig. 3 shows the overall 2D potential energy surface. All orientations in Fig. 3 correspond to bound dimer geometry, and the global minimum is characterised by the DPM attractive energy,[14] $E_{attr} = -408$ cm^{-1}. The stationary points were then better characterised both with an unconstrained DPM optimization and with *ab initio* calculations at the MP2/6-311++G** level, performed with the Gaussian98 package of programs.[17] Also in this case the monomer geometry was frozen at the r_0 structure. Only seven out of the nine points found with the DPM method resulted in local *ab initio* minima, as shown in Table 1. Four of these minima have considerably lower energies (DPM) than those of the three remaining conformations. They have, therefore, been considered to be the most plausible conformations (see Fig. 1) of the adduct. We note that in the three most stable *ab initio* conformations **I**–**III**, the Kr atom is positioned in such a way that it is close to van der Waals contact with three of the four heavy atoms in PRO, and in conformations **I** and **II** one of the contacted heavy atoms is the oxygen. The lack of confirmation of some of the DPM minima (**VIII**–**IX**) in the *ab initio* results is not particularly surprising in view of the crudity of the hard-sphere repulsive potential used in this model, as has been discussed previously.[14] On the other hand the use of DPM minima as starting points for more refined calculations appears to provide a useful shortcut.

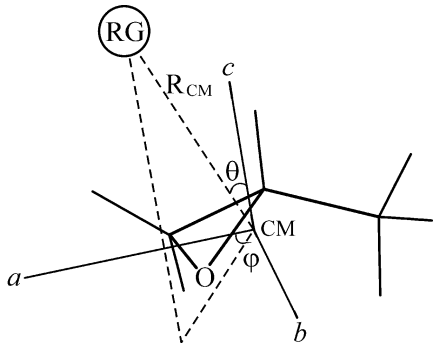

Fig. 2 Definition of the spherical coordinates used in the DPM calculations and in the structural analysis.

Rotational spectra

Four sets of *ab initio* rotational constants, corresponding to the four forms of Fig. 1, were used for the trial preliminary calculations of the spectrum. The estimated rotational constants of the four species resulted in the ranges *A*: 6120–8350, *B*: 810–930, *C*: 750–840 MHz, respectively. All dipole moment components were expected to be different from zero for all conformers.

The spectrum of the most abundant isotopic species (^{84}Kr, *ca.* 57% of natural abundance) has been investigated first. Several high *J*, high K_a coalescing μ_b- and μ_c-R-type lines, quadruply overlapped due to the K_a near prolate behaviour, were easily assigned; later on the weaker lines with lower K_a's, resolved into quartets (two μ_b and two μ_c lines, with accidentally the same intensities), have been measured. The experimental frequencies, deposited as supplementary data (ESI service), have been fitted with Watson's quartic Hamiltonian.[18] Since PRO-Kr is an almost prolate symmetric top the S-reduction and the I^r-representation have been chosen. All quartic centrifugal distortion constants were determined from the fit. The spectrum of the second most intense isotopomer (^{86}Kr, *ca.* 17% natural abundance) has also been measured and the experimental frequencies are also deposited as supplementary data (ESI service).† The derived spectroscopic constants of both isotopomers are given in Table 2.

Table 1 Calculated energies (MP2/6-311++G** with GAUSSIAN98, and DPM with RGDMIN) for various conformers of PRO-Kr. ΔE is energy relative to the most stable calculated species. The geometrical parameters are defined in Fig. 2

		I	II (*anti*)	III	IV (*syn*)	V	VI	VII	VIII	IX
MP2	ΔE/cm^{-1}	0	27	36	58	70	120	156	—	—
	R_{CM}/Å	3.90	4.09	4.12	3.95	4.38	4.62	5.58		
	θ/°	70	43	75	163	117	41	107		
	φ/°	98	22	−101	54	16	168	−179		
DPM	ΔE/cm^{-1}	5	1	0	2	90	82	179	4	7
	R_{CM}/Å	4.05	4.19	4.13	3.97	4.62	4.60	5.44	4.17	4.03
	θ/°	68	43	70	166	90	44	87	99	129
	φ/°	102	21	−103	55	11	167	178	−105	107

View Article Online

Published on 26 February 2003. Downloaded by Michigan State University on 20/01/2016 14:42:58.

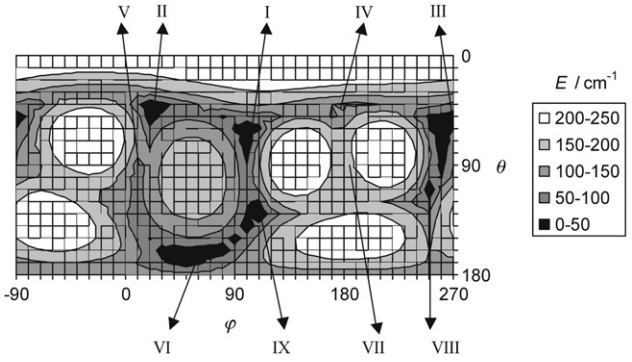

Fig. 3 DPM surface for PRO-Kr: θ = angle (RG-CM-*c*), φ = dihedral angle (RG-CM-c-a), $\Delta\varphi = \Delta\theta = 10°$. The corresponding surfaces for Ne and Ar are qualitatively similar.

Table 2 Spectroscopic constants of PRO-Kr. (*S*-reduction, I^r-representation)

		PRO···^{84}Kr	PRO···^{86}Kr
A	/MHz	6695.582(7)[a]	6695.456(7)
B	/MHz	927.521(4)	919.04(6)
C	/MHz	841.676(4)	835.04(5)
D_J	/kHz	1.929(3)	[1.929][b]
D_{JK}	/kHz	22.06(2)	[22.06]
D_K	/kHz	−3.6(1)	[−3.6]
d_1	/kHz	−0.186(5)	[−0.186]
d_2	/kHz	−0.0244(6)	[−0.0244]
N[c]		70	17
σ[d]	/MHz	0.07	0.15

[a] The quantity in parentheses is standard error in units of the last digit of the quoted value. [b] Parameters in brackets were fixed at the values obtained for the parent species. [c] Number of transitions in the fit. [d] Standard deviation of the fit.

Conformational assignment and van der Waals geometry of PRO-Kr

Table 3 reports the experimental rotational constants, planar moments of inertia and r_s substitution coordinates,[19] and compares those with analogous values calculated for species **I**–**VII** of Table 1. The r_s coordinates of the krypton atom were calculated in two ways: (i) in the principal axes system of PRO, assuming the substitution of a hypothetical atom of zero mass with a krypton atom on going from PRO to PRO-Kr; (ii) in the principal axes system of PRO-^{84}Kr, when substituting ^{84}Kr with ^{86}Kr. One can see that 8 different conformations, corresponding to the ± signs of the three coordinates, can match the experimental coordinates.[20,21] The eight different solutions are drawn in Fig. 4. Comparison of the resulting Kr-C and Kr-O distances with sums of standard van der Waals radii allows rejection of all solutions except for 1^+ and 3^+ on the basis of unacceptably close proximity of some atoms. Solution 3^+ is also borderline, corresponding to a rather short Kr-O distance of 3.36 Å.

From the data reported in Table 3 and from Fig. 4 it is easy to see that the best, and in fact the only agreement with experiment, is for conformer **I**. Once the conformational assignment has been made, it was possible to fit the R_{CM}, θ and φ parameters to the six experimental rotational constants, obtaining the values $R_{CM} = 3.8784(2)$ Å, $\theta = 74.7(6)°$ and $\varphi = 97.3(3)°$, respectively. Although the intermolecular separation R_{CM} is determined quite precisely, its large magnitude and the uncertainties in the two angles degrade the precision of the corresponding Cartesian coordinates of the Kr atom. The least-squares solution above is equivalent to $a = -0.475(19)$, $b = 3.711(11)$, $c = 1.023(39)$ Å, in the inertial frame of PRO.

Table 3 Comparison between experimental and calculated (MP2/6-311++G**) values for the seven conformations of the PRO-Kr complex. ΔE is energy relative to that of the most stable calculated species

	Exp.	I	II (*anti*)	III	IV (*syn*)	V	VI	VII
ΔE_{MP2}/cm^{-1}		0	27	36	58	70	120	156
A/MHz	6695.58	6663.8	8352.1	6789.7	6121.1	12045.1	8322.0	15412.8
B/MHz	927.52	915.6	807.2	825.9	895.1	695.8	644.9	442.3
C/MHz	841.68	832.7	775.6	758.4	827.3	685.3	625.7	440.5
I_{aa}/u Å^2	75.48	75.84	60.51	74.43	82.56	41.96	60.73	32.79
I_{bb}/u Å^2	544.87	551.94	626.08	611.90	564.59	726.32	783.67	1142.66
I_{cc}/u Å^2	600.44	606.92	651.58	666.34	610.89	737.46	807.76	1147.41
P_{aa}/u Å^2	534.92	541.51	608.58	601.90	546.46	710.91	765.35	1128.64
P_{bb}/u Å^2	65.53	65.41	43.00	64.44	64.43	26.55	42.41	18.77
P_{cc}/u Å^2	9.95	10.43	17.50	10.00	18.13	15.41	18.32	14.02
a/Å[a]	±0.455 (1)	−0.489	2.572	−0.767	0.672	3.743	−2.933	−5.327
b/Å	±3.728 (1)	3.643	1.047	−3.906	0.918	1.082	0.629	−0.121
c/Å	±0.969 (2)	1.317	3.007	1.058	−3.780	−2.003	3.511	−1.641
R_{CM}/Å	3.878	3.905	4.093	4.119	3.948	4.381	4.619	5.575
θ/°	76, 104	70	43	75	163	117	41	107
φ/°	±83, ±97	98	22	−101	54	16	168	−179
a/Å[b]	±1.576 (4)	−1.596	1.672	1.684	−1.614	−1.790	−1.887	−2.280
b/Å	±0.26 (3)	0.020	0.080	0.028	−0.032	−0.059	0.072	0.007
c/Å	±0.26 (3)	0.009	0.012	−0.07	−0.007	−0.025	0.006	−0.032

[a] Substitution coordinates in the principal axes system of isolated PRO (see text). [b] Substitution coordinates in the principal axes system of PRO-^{84}Kr (see text).

View Article Online

Published on 26 February 2003. Downloaded by Michigan State University on 20/01/2016 14:42:58.

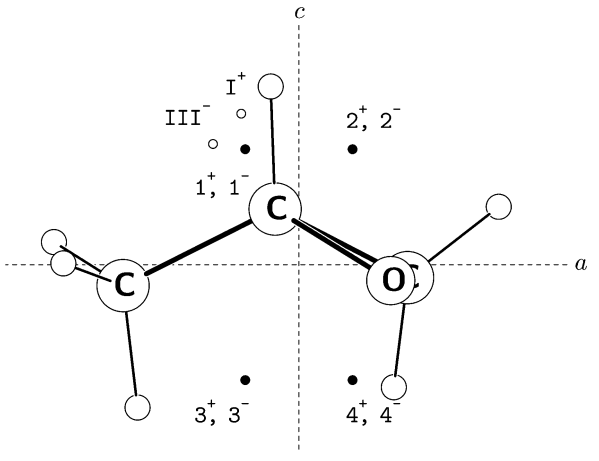

Fig. 4 The eight equivalent structural solutions derived from rotational constants for PRO-Kr plotted on the *ac* inertial plane of PRO. The superscripts ± indicate that the Kr atom lies above/below the plane of the diagram, respectively. Only two of the calculated geometries, **I** and **III**, are in the region of the experimental solutions, the points for geometries **II**, **IV**–**VIII** lie well outside this diagram.

Van der Waals vibrations and dissociation energy of PRO-Kr

When the Kr atom forms the complex with PRO, the three translational degrees of freedom of the isolated atom are replaced by three van der Waals vibrational modes: the PRO-Kr stretch and two internal rotations of Kr around the ring (generally considered to be local harmonic bending modes). Models have been developed to obtain the potential energy surface governing van der Waals motions when the ring molecule involved in the complex has at least a C_{2v} symmetry and generally they assume a harmonic behaviour.[22] Since PRO-Kr has no elements of symmetry, it would be hazardous to proceed to obtain information on the potential energy surface of the two bendings from D_{JK} and D_K centrifugal distortion parameters. It appears possible, however, to obtain some rough information on the Kr stretching motion. We assume it to be isolated from the other motions and estimate the stretching force constant (k_s) by approximating the complex as a molecule made up from two rigid parts. It has been shown by Millen[23] for complexes with several symmetry elements, and by Read *et al.*[24] for asymmetric top complexes in which the stretching coordinate is near-parallel to the inertial *a*-axis, that approximate values of stretching force constants can be obtained from equations of the type:

$$k_s = 16\,\pi^4(\mu\,R_{CM})^2[4B^4 + 4C^4\text{-}(B-C)^2(B+C)^2]/(hD_J) \quad (1)$$

where μ is the pseudo-diatomic reduced mass, R_{CM} is the distance between the centres of mass of the monomers (3.878 Å for PRO-Kr), and D_J is the centrifugal distortion constant. For PRO-Kr we obtained $k_s = 2.9$ N m^{-1}, corresponding to a harmonic stretching fundamental of wavenumber $\nu_s = 38$ cm^{-1}. By assuming a Lennard–Jones type potential the dissociation energy has been estimated to be $E_B = 310$ cm^{-1} for PRO-Kr by applying the approximate formula:[22]

$$E_B = (1/72)k_s\,R_e^2 \quad (2)$$

Table 4 Rare gas (RG) stretching constant, dissociation energy and R_{CM} of PRO-RG, with RG = Ne, Ar, Kr

		PRO-Ne[a]	PRO-Ar[b]	PRO-Kr[c]
k_s	N m^{-1}	1.0	2.5	2.9
E_B	kJ mol^{-1}	1.1	3.0	3.7
R_{CM}[d]	Å	3.587	3.772	3.878

[a] Ref. 8. [b] Ref. 9. [c] Present work. [d] r_s value.

Table 5 Comparison between experimental and calculated (MP2/6-311++G** and DPM) values for the PRO-Ar complex. ΔE is energy relative to that of the most stable calculated species

	Exp.[a]	I	II (*anti*)	III	IV (*syn*)	V	VI	VII	VIII[b]	IX[b]
ΔE_{MP2}/cm^{-1}		0	27	21	66	67	122	208	—	—
A/MHz	6791.62 (1)	6706.8	8490.1	6816.2	6078.2	12116.5	8090.9	16263.5		
B/MHz	1382.041 (6)	1407.0	1223.0	1249.5	1405.6	1023.2	972.8	671.4		
C/MHz	1200.374 (7)	1219.0	1155.0	1103.2	1243.0	995.6	626.5	665.6		
I_{aa}/u Å^2	74.41	75.35	59.53	74.14	83.15	41.71	62.46	31.07		
I_{bb}/u Å^2	365.68	359.19	413.22	404.46	359.55	493.93	519.53	752.67		
I_{cc}/u Å^2	421.02	414.58	437.57	458.10	406.59	507.61	545.45	759.31		
P_{aa}/u Å^2	356.14	349.21	395.63	394.21	341.50	479.91	501.26	740.45		
P_{bb}/u Å^2	64.88	65.37	41.94	63.89	65.09	27.69	44.20	18.86		
P_{cc}/u Å^2	9.54	9.98	17.59	10.25	18.05	14.02	18.27	12.22		
a/Å[c]	±0.5947 (1)	−0.466	2.466	−0.821	0.489	3.606	−2.681	−5.192		
b/Å	±3.689 (2)	3.580	0.949	−3.697	0.935	1.360	0.681	0.296		
c/Å	±0.494 (2)	0.959	2.874	1.210	−3.584	−1.789	3.491	−1.255		
R_{CM}/Å	3.769	3.735	3.905	3.976	3.736	4.249	4.454	5.349		
θ/°	82, 98	75	43	72	164	115	38	107		
φ/°	±81, ±99	97	21	−103	62	21	166	177		
ΔE_{DPM}/cm^{-1}		7	0	3	3	76	69	148	4	8
R_{CM}/Å	3.769	3.906	4.043	3.987	3.826	4.479	4.452	5.297	4.022	3.887
θ/°	82, 98	69	43	71	166	89	44	86	100	129
φ/°	±81, ±99	102	20	−103	55	11	166	178	−106	107

[a] From ref. 9. [b] Not a local energy minimum with MP2 calculations. [c] In the principal axes system of isolated PRO (see text).

View Article Online

Published on 26 February 2003. Downloaded by Michigan State University on 20/01/2016 14:42:58.

Table 6 Comparison between experimental and calculated (MP2/6-311++G** and DPM) values for the PRO-Ne complex. ΔE is energy relative to that of the most stable calculated species

	Exp.[a]	I	II (*anti*)	III	IV (*syn*)	V	VI	VII[b]	VIII	IX	X	XI[c]
ΔE_{MP2}/cm^{-1}		2	0	9	25	35	38	50	16	39	53	
A/MHz	6784.78 (3)	6682.1	8357.6	6822.1	6096.7	13012.2	8850.0	15429.1	6727.8	6825.3	12056.3	
B/MHz	2289.70 (2)	2331.0	1956.8	2026.3	2239.1	1629.2	1580.8	1137.5	2077.5	2105.0	1325.5	
C/MHz	1831.14 (3)	1871.0	1787.5	1687.3	1861.0	1594.1	1485.6	1125.8	1691.3	1737.9	1266.2	
I_{aa}/u Å^2	74.49	75.63	60.47	74.08	82.89	38.84	57.10	32.76	75.12	74.05	41.92	
I_{bb}/u Å^2	220.72	216.81	258.27	249.42	225.70	310.20	319.70	444.27	243.27	240.08	381.27	
I_{cc}/u Å^2	275.99	270.11	282.72	299.51	271.56	317.02	340.18	448.91	298.81	290.79	399.14	
P_{aa}/u Å^2	211.11	205.64	240.26	237.43	207.18	294.19	301.38	430.21	233.48	228.41	369.25	
P_{bb}/u Å^2	64.88	64.46	42.46	62.09	64.37	22.83	38.79	18.70	65.33	62.38	29.90	
P_{cc}/u Å^2	9.61	11.17	18.01	11.99	18.52	16.01	18.31	14.06	9.79	11.67	12.02	
a/Å[d]	0.5295 (5)	−0.583	2.228	−0.980	0.560	3.515	−2.772	−4.738	−0.464	−0.922	3.852	
b/Å	3.501 (2)	3.125	0.723	−3.106	0.431	0.681	0.549	−0.101	−3.680	3.125	−1.995	
c/Å	0.573 (5)	1.571	2.898	2.000	−3.559	−1.799	3.127	−1.529	0.810	−1.840	−1.578	
R_{CM}/Å	3.587	3.546	3.726	3.822	3.629	4.007	4.215	4.979	3.796	3.742	4.616	
θ/°	81, 99	64	39	58	169	117	42	108	78	119	110	
φ/°	±81, ±99	101	18	−108	38	11	168	−179	−97	106	−27	
a/Å[e]	±2.630 (2)	−2.633	2.745	2.835	−2.694	−2.969	−3.117	−3.701	2.822	−2.775	3.425	
b/Å	±0.16 (3)	0.149	0.380	0.201	−0.164	−0.221	0.335	−0.018	0.098	0.199	−0.227	
c/Å	±0.08 (5)	0.052	0.043	0.056	−0.016	−0.132	0.031	−0.147	0.025	−0.054	−0.075	
ΔE_{DPM}/cm^{-1}		7	0	6	3	34	32		2	7	65	21
R_{CM}/Å	3.587	3.570	3.699	3.646	3.474	4.145	4.105		3.664	3.543	4.537	3.782
θ/°	81, 99	71	42	74	167	87	45		101	130	101	45
φ/°	±81, ±99	103	19	−104	54	11	163		-107	108	−55	−82

[a] From ref. 8. [b] Not a local energy minimum with the DPM model. [c] Not a local energy minimum with MP2 calculations. [d] In the principal axes system of isolated PRO. [e] In the principal axes system of PRO-^{20}Ne

These values are compared to those of the related complexes PRO-Ne and PRO-Ar in Table 4. It can be seen that the derived values for E_B are proportional to the increasing rare-gas polarisability in the series from Ne to Kr. It has been shown[14] that, for a Lennard-Jones potential, the attractive energy is twice the energy at the minimum, so that the value for structure **I** from the DPM calculation, $E_{attr} = -408$ cm^{-1}, leads to $E_B \approx 200$ cm^{-1}, which is in broad agreement with the result from D_J.

An interesting comparison can be made also with the prototype homologue complex oxirane–Kr, for which the values $k_s = 2.7$ N m^{-1}, $\nu_s = 40$ cm^{-1} and $E_B = 260$ cm^{-1} are reported.[7]

Reconsideration of the conformational assignment of PRO-Ne and PRO-Ar

After the conformational study of PRO-Kr, a revision of the conformational assignment of PRO-Ne and PRO-Ar was required. The DPM and *ab initio* calculations performed for PRO-Kr were repeated for PRO-Ne (ref. 8) and PRO-Ar (ref. 9). The obtained potential energy surfaces turned out to be qualitatively similar to that of PRO-Kr. A comparison of the calculated values with the experimental evidence is given in Tables 5 and 6 for the Ar and Ne species, respectively. One can see that the best agreement is, in both cases, also with species **I**.

Conclusions

The investigation of the molecular complex PRO-Kr by millimetre wave absorption free jet spectroscopy allowed for the determination of its most stable conformation, species **I** of Fig. 1, of the van der Waals structural parameters, and of the dissociation energy. The highest stability of species **I** is in agreement with the *ab initio* calculations, and not in contrast with the results of the DPM analysis. Calculations of the same type suggest that species **I** is also the most stable species for PRO-Ne and PRO-Ar.

The dissociation energy, E_B, has been estimated to be 3.7 kJ mol^{-1}, continuing an increasing trend relative to the corresponding values for PRO-Ar (3.0 kJ mol^{-1}) and PRO-Ne

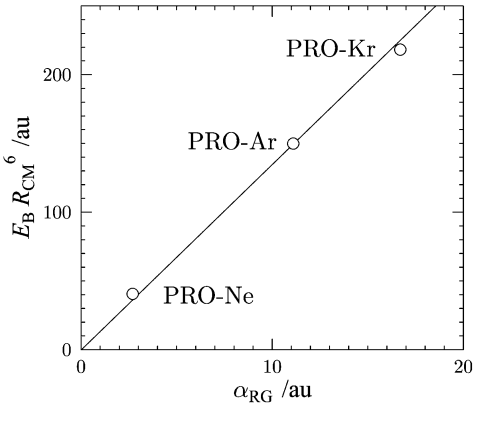

Fig. 5 A plot of the quantity $E_B R_{CM}^6$ against the polarisability of the rare gas atom, α_{RG}, for the three PRO-RG dimers. The clear linear dependence passing through the origin shows the PRO-RG dimer series follows the simple London formula for dispersive energy.

View Article Online

Published on 26 February 2003. Downloaded by Michigan State University on 20/01/2016 14:42:58.

(1.1 kJ mol^{-1}). Since these complexes are expected to be dispersively bound, their dissociation energy would be expected to be proportional to the term $\alpha_{RG}\ \alpha_{PRO}/R_{CM}^6$, where α_{RG} and α_{PRO} are the polarisabilities of the rare gas atom, and of the PRO molecule, respectively. Hence a plot of $E_B\ R_{CM}^6$ against α_{RG} should be a straight line passing through the origin, which is indeed the case, as seen in Fig. 5. This also confirms the usefulness of the diatomic approximation for estimating E_B, and suggests that in the three dimers the RG atom is subject to the same effective polarisability of PRO, which provides some indirect support that it occupies the same complexation site.

The spectra of the slightly higher energy species **II**–**IV** have not been observed, because higher energy conformers relax to the global minimum in the jet conditions, when, as for complexes such as PRO-Kr, there is a low interconversion barrier.[25]

The supporting calculations performed in this work established that the conformational preference of PRO-Kr is shared by PRO-Ne and PRO-Ar, in contrast with the estimates given in previous investigations.[8,9] The DPM analysis was useful in finding rapidly the various local minima, while subsequent MP2 level *ab initio* calculations gave more reliable estimates of the relative energies of the various minima.

Acknowledgements

We thank the University of Bologna, the Ministero dell'Università e della Ricerca Scientifica e Tecnologica and the C.N.R. for financial support. S.B. wants to acknowledge the University of Valladolid for travel support and Prof. W. Caminati for his hospitality. We thank the Italian and Spanish governments for their support through the *azione integrata Italia Spagna*, (HI-2000-0092 in Spain, It294 in Italy).

References

1 *Atomic and Molecular Beam Methods*, ed. G. Scoles, Oxford University Press, Oxford, 1988, vol. I, II.
2 S. E. Novick, *Bibliography of Rotational Spectra of Weakly Bound Complexes*, 2002, available at http://www.wesleyan.edu/chem/bios/vdw.html.
3 T. D. Klots, T. Emilsson, R. S. Ruoff and H. S. Gutowsky, *J. Chem. Phys.*, 1989, **93**, 1255.
4 T. D. Klots, T. Emilsson and H. S. Gutowsky, *J. Chem. Phys.*, 1992, **97**, 5335.
5 Y. Xu and W. Jäger, *J. Chem. Phys.*, 1997, **106**, 7968.
6 B. Velino, S. Melandri, A. Maris, P. G. Favero and W. Caminati, *Mol. Phys.*, 2000, **98**, 1919.
7 B. Velino, A. Millemaggi and W. Caminati, *J. Mol. Spectrosc.*, 2002, **215**, 73.
8 S. Blanco, A. Maris, S. Melandri and W. Caminati, *Mol. Phys.*, 2002, **100**, 3245.
9 S. Blanco, A. Maris, A. Millemaggi and W. Caminati, *J. Mol. Struct.*, 2002, **612**, 309.
10 S. Melandri, W. Caminati, L. B. Favero, A. Millemaggi and P. G. Favero, *J. Mol. Struct.*, 1995, **352/353**, 253.
11 S. Melandri, G. Maccaferri, A. Maris, A. Millemaggi, W. Caminati and P. G. Favero, *Chem. Phys. Lett.*, 1996, **261**, 267.
12 P. Moreschini, W. Caminati, P. G. Favero and A. C. Legon, *J. Mol. Struct.*, 2001, **599**, 81.
13 B. Velino, P. G. Favero and W. Caminati, *J. Chem. Phys.*, 2002, **117**, 5688.
14 Z. Kisiel, *J. Phys. Chem*, 1991, **95**, 7605; Z. Kisiel, P. W. Fowler and A. C. Legon, *J. Chem. Phys.*, 1991, **95**, 2283.
15 Z. Kisiel, *PROSPE—Programs for Rotational Spectroscopy*, available at http://info.ifpan.edu.pl/~kisiel/prospe.htm.
16 M. Imachi and R. L. Kuczkowski, *J. Mol. Struct.*, 1982, **86**, 55.
17 Gaussian 98, Revision A.7, M. J. Frisch, G. W. Trucks, H. B. Schlegel, G. E. Scuseria, M. A. Robb, J. R. Cheeseman, V. G. Zakrzewski, J. A. Montgomery, Jr., R. E. Stratmann, J. C. Burant, S. Dapprich, J. M. Millam, A. D. Daniels, K. N. Kudin, M. C. Strain, O. Farkas, J. Tomasi, V. Barone, M. Cossi, R. Cammi, B. Mennucci, C. Pomelli, C. Adamo, S. Clifford, J. Ochterski, G. A. Petersson, P. Y. Ayala, Q. Cui, K. Morokuma, D. K. Malick, A. D. Rabuck, K. Raghavachari, J. B. Foresman, J. Cioslowski, J. V. Ortiz, A. G. Baboul, B. B. Stefanov, G. Liu, A. Liashenko, P. Piskorz, I. Komaromi, R. Gomperts, R. L. Martin, D. J. Fox, T. Keith, M. A. Al-Laham, C. Y. Peng, A. Nanayakkara, C. Gonzalez, M. Challacombe, P. M. W. Gill, B. Johnson, W. Chen, M. W. Wong, J. L. Andres, C. Gonzalez, M. Head-Gordon, E. S. Replogle, and J. A. Pople, Gaussian, Inc., Pittsburgh PA, 1998.
18 J. K. G. Watson, in *Vibrational Spectra and Structure*, ed. J. R. Durig, Elsevier, New York/Amsterdam, 1977, vol. 6, pp. 1–89.
19 J. Kraitchman, *Am. J. Phys.*, 1953, **21**, 17.
20 H. D. Rudolph, *Struct. Chem.*, 1991, **2**, 581.
21 H. Dreizler and S. Kassi, *Z. Naturforsch.*, 1998, **53a**, 743.
22 R. P. A. Bettens, R. M. Spycher and A. Bauder, *Mol. Phys.*, 1995, **86**, 487.
23 D. J. Millen, *Can. J. Chem.*, 1985, **63**, 1477.
24 W. G. Read, E. J. Campbell and G. Henderson, *J. Chem. Phys.*, 1983, **78**, 3501.
25 See for example P. D. Godfrey, F. M. Rodgers and R. D. Brown, *J. Am. Chem. Soc.*, 1997, **119**, 2232.