View Article Online / Journal Homepage / Table of Contents for this issue

Spiro[3.3]alkyl and Spiro[3.3]alkylmethyl Radicals

Charles Roberts and John C. Walton *
Department of Chemistry, The University, St. Andrews, Fife KY16 9ST
Bernard Maillard
Laboratoire de Chimie Organique du Silicium et de l'Étain, Université de Bordeaux 1, 33405, Talence Cédex, France

Published on 01 January 1986. Downloaded by Michigan State University on 19/01/2016 17:04:04.

Spiro[3.3]heptan-3-yl radicals were generated by bromine abstraction from 3-bromospiro-[3.3]heptane and observed by e.s.r. spectroscopy. Both spiro[3.3]heptan-3-yl and spiro[3.3]heptan-2-yl radicals were observed on hydrogen abstraction from spiro[3.3]heptane. The measured proportions of the two radicals indicated that hydrogen abstraction occurs at roughly the same rate from both C(2) and C(3). The e.s.r. parameters of both radicals show that they are structurally very similar to cyclobutyl radicals. The spiro[3.3]heptan-2-yl radical rearranges to the cyclobutenylpropyl radical at temperatures above *ca.* 290 K. The photochemical reactions of spiro[3.3]heptane with bromotrichloromethane and bromine were investigated.

Spiro[3.3]heptylmethyl radicals were generated from the corresponding bromo compound; their rearrangement to 1-allylcyclobutylmethyl radicals was monitored by e.s.r. spectroscopy. Indirect evidence suggested a further rearrangement of 1-allylcyclobutylmethyl radicals to 4-methylenehept-6-enyl radicals. From the activation energy for β-scission in spiro[3.3]heptylmethyl radicals it was possible to show that the ring strain in spiro[3.3]heptane cannot exceed twice the ring strain in cyclobutane by more than *ca.* 3 kcal mol^{-1}.

Few small, strained bicycloalkyl radicals have been observed directly because their lifetimes are usually too short for spectroscopic detection. Bicyclo[*n*.1.0]alkan-2-yl radicals rearrange too rapidly by β-scission to cycloalkenyl or cycloalkenylmethyl radicals for e.s.r. detection.[1,2] Similarly, the majority of spiro[2.*n*]alkan-2-yl radicals rapidly rearrange to cycloalkenylethyl radicals,[3,4] although the e.s.r. spectrum of spiropentyl radicals (**1**) has been obtained[5] at 270 K. The rate of β-scission of spiro[2.3]hexan-2-yl radicals (**2**) is also low enough for them to be observed below *ca.* 175 K under e.s.r. conditions.[4] Bicyclobutyl,[6] bicyclo[1.1.1]pentyl,[7] and bicyclo[2.1.1]hexyl radicals[8] have also been characterised by e.s.r. spectroscopy.

Hydrogen abstraction from spiro[2.*n*]alkanes (**3**) takes place *preferentially* at the methylene groups adjacent to the cyclopropyl ring [cyclopropylmethyl (cpm) sites].[3,4] This activation of the cpm sites was attributed to stabilisation of the resultant cyclopropylmethyl-type radical (**4**) by delocalisation of the unpaired electron into the Walsh orbitals of the adjacent cyclopropyl ring, *i.e.* to a pseudo-allyl type of delocalisation.[3,4] The α-hydrogen hyperfine splitting (hfs) in the e.s.r. spectrum of the radical (**2**) was found to be lower than normal, and this was taken as evidence of spin delocalisation into the orbitals of the adjacent C_3 ring. However, the possibility that $a(H_\alpha)$ in (**2**) is low because of non-planarity at the radical centre could not be ruled out.

Delocalisation of unpaired spin density into the orbitals of an adjacent cyclobutyl ring should be insignificant. Thus we would predict $a(H_\alpha)$ in the spiro[3.3]heptan-2-yl radical (**7**) (Scheme 1) to be normal, *i.e.* similar to $a(H_\alpha)$ in cyclobutyl radicals, and this would provide good evidence that the low $a(H_\alpha)$ in the radical (**2**) is not due to non-planarity at the radical centre. In addition, if the foregoing conclusions are right, we expect that hydrogen abstraction from spiro[3.3]heptane (**6**) should not take place preferentially at the methylene groups adjacent to the cyclobutyl ring [C(2), C(4), C(5), and C(7)]. The spiro[3.3]heptan-2-yl radical (**7**) is simultaneously a cyclobutyl-type and a cyclobutylmethyl-type radical and hence rearrangement by β-scission to give 3-cyclobutenylpropyl radicals (**8**) is possible. This type of ring fission is generally sufficiently slow for the unrearranged radicals to be observed by e.s.r. spectroscopy at temperatures below ambient.[9,10] In this paper we report a study of hydrogen abstraction from spiro[3.3]heptane (**6**) by t-butoxyl and trichloromethyl radicals and by bromine atoms together with an e.s.r. study of the structures and rearrangements of spiro[3.3.]heptan-2-yl (**7**), spiro[3.3]heptan-3-yl (**9**), and spiro[3.3]heptylmethyl radicals (**15**).

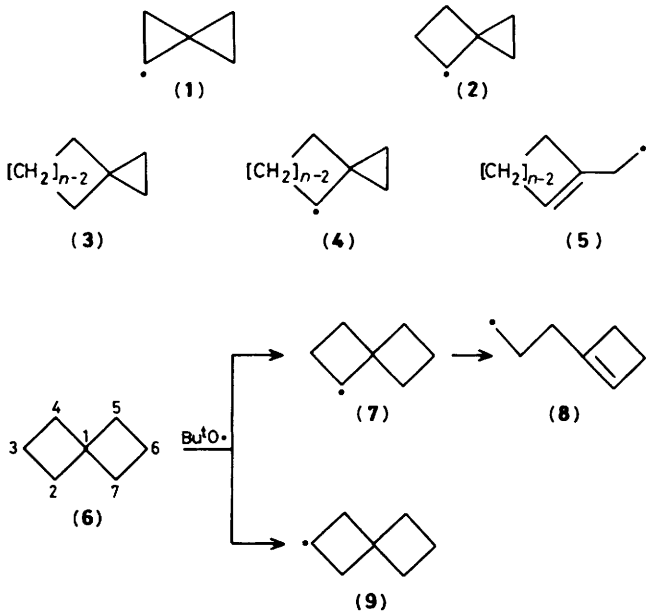

Scheme 1.

Results and Discussion

Synthesis of Spiro[3.3]*heptane and Other Radical Precursors.*—In the only previous synthesis of (**6**) Weinstein *et al.* converted spiro[3.3]heptane-3-carboxylic acid (**10**) into the iodide, which was reduced with Li metal.[11] However, we were

View Article Online

Published on 01 January 1986. Downloaded by Michigan State University on 19/01/2016 17:04:04.

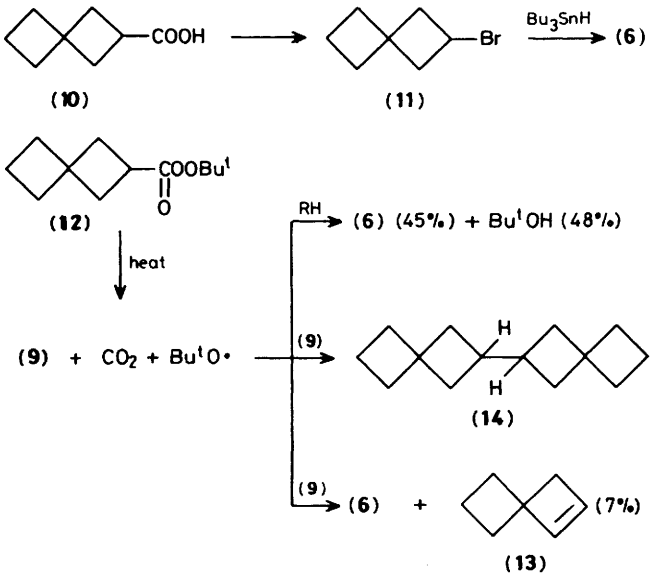

Scheme 2.

unable to achieve good results at the final reduction stage and we therefore converted the acid into 3-bromospiro[3.3]heptane (**11**) using the modified Hunsdieker procedure[12] and then reduced the bromide with tri-n-butyltin hydride. Small amounts of (**6**) were obtained by this method but its main drawback was that the Hunsdieker bromination gave more than ordinarily erratic results. The acid (**10**) was therefore converted into the acyl chloride, which on treatment with t-butyl hydroperoxide and pyridine gave the t-butyl peroxy ester (**12**).

The peroxy ester was heated in *p*-cymene at 150 °C until CO_2 evolution ceased. Distillation up to the b.p. of *p*-cymene gave a fraction which g.l.c. showed to contain three components. The first eluted (48%) was shown to be t-butyl alcohol. The second and third components (7 and 45%, respectively) were shown by g.l.c.–mass spectrometry to be hydrocarbons with molecular ions at 94 and 96 mass units each. The mixture was separated by preparative g.l.c. and the n.m.r. spectra were examined. The ^{1}H n.m.r. of component 2 indicated the structure spiro[3.3]hept-2-ene (**13**) (see Experimental section). The 80 MHz ^{1}H n.m.r. spectrum of component 3 showed a single complex multiplet at δ 1.9; however, at 360 MHz two types of hydrogen atom were resolved [δ 1.76 (4 H) and δ 1.92 (8 H)] as expected for spiro[3.3]heptane. The spectrum was satisfactorily simulated with coupling constants within the expected range for structure (**6**) (Experimental section). The structure was confirmed by ^{13}C n.m.r., which showed three types of carbon atom. Scheme 2 shows the probable mechanism of the reaction. Spiro-[3.3]heptan-3-yl radicals (**9**) generated on thermolysis of the peroxy ester (**12**) abstract hydrogen from the solvent to give spiro[3.3]heptane (**6**). The spiro[3.3]hept-2-ene (**13**) is probably formed by disproportionation of two radicals (**9**). If this is correct it would be expected that (**13**) would be accompanied by the dimer (**14**) formed by combination of two radicals (**9**). However, the dispiro[3.3]heptane (**14**) was probably too involatile to distil out of *p*-cymene and so escaped detection. Alternatively, (**13**) could also be formed from (**9**) and Bu^{t}O$^•$ radicals.

3-(Bromomethyl)spiro[3.3]heptane was synthesized by reduction of spiro[3.3]heptane-3-carboxylic acid (**10**) with $LiAlH_4$ to give spiro[3.3]heptylmethanol, which was converted into the bromide by treatment of the tosyl derivative with lithium bromide.

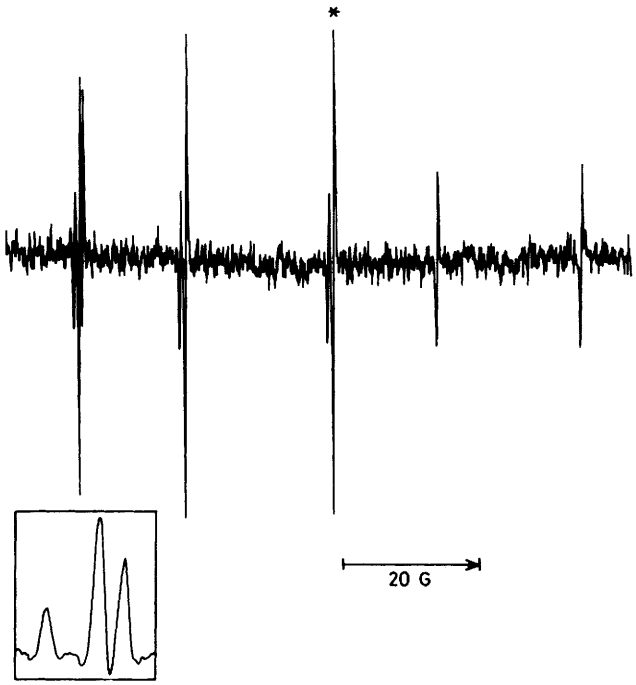

Figure 1. High-field half of the 9.4 GHz e.s.r. spectrum of spiro-[3.3]heptan-3-yl radicals (**9**) at 145 K. The inset shows the fine structure of the left-hand line on an expanded scale with second harmonic presentation

E.s.r. Study of Spiro[3.3]*heptan-2-yl* (**7**) *and Spiro*[3.3]*heptan-3-yl* (**9**) *Radicals.*—Degassed solutions of 3-bromospiro-[3.3]heptane (**11**), triethylsilane, and di-t-butyl peroxide in cyclopropane were irradiated in the cavity of the e.s.r. spectrometer. Photochemically generated t-butoxyl radicals abstract hydrogen from triethylsilane and the resulting triethylsilyl radicals abstract bromine from (**11**) giving the radicals (**9**). The spectrum shown in Figure 1 was obtained at 145 K; spectral changes at higher temperatures were negligible. The spectrum consisted of a double pentet from one α- and four β-hydrogen atoms; the e.s.r. parameters are given in Table 1. No long-range hfs was resolved (ΔH_{pp} = 0.2 G) but the inner spectral lines showed additional second-order structure (Figure 1; inset). The measured second-order splittings were 0.40 and 0.83 G and were in good agreement with the values of 0.40 and 0.80 G calculated from the β-hfs by use of the Table given by Fessenden.[13] The hydrogen hfs values of spiro[3.3]heptan-3-yl radicals (**9**) are very similar to those of cyclobutyl radicals (Table 1) and it is likely that the average structure is planar at the radical centre, as it is in cyclobutyl radicals.[14] The activation energy for β-scission of cyclobutyl radicals[15] is 31.6 kcal mol^{-1} * and therefore reactions in solution involving these radicals normally proceed without rearrangement. β-Scission in spiro-[3.3]heptan-3-yl radicals would probably involve slightly greater release of ring strain than in cyclobutyl radicals, but the SOMO is orthogonal (in the ground state) to the orbitals of the C_β–C_γ bonds. This stereoelectronic effect[16] disfavours ring opening; no rearrangement was observed in the accessible temperature range, *i.e.* 140—315 K.

Degassed solutions of spiro[3.3]heptane and di-t-butyl peroxide in cyclopropane were irradiated in the e.s.r. cavity. The resulting spectrum was complicated by the presence of cyclopropyl and allyl radicals derived from solvent, but both

* 1 cal = 4.18 J.

View Article Online

Published on 01 January 1986. Downloaded by Michigan State University on 19/01/2016 17:04:04.

Table 1. E.s.r. parameters of spiro[3.3]heptyl and related radicals

Radical		Temp. (K)	Exptl. hfs (G)		INDO hfs (G)
	a	183	1 H_α	21.3	
			4 H_β	36.8	
			2 H_γ	1.1	
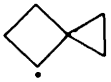	*b*	141	1 H_α	19.6	−16.8
			2 H_β	33.0	47.9
			6 H_γ	1.8	2 H_γ −5.3, 2 H_γ 1.6, 2 H_γ −0.7
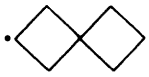		145	1 H_α	21.5	−18.2
			4 H_β	36.5	48.7[c]
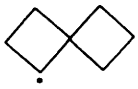		240	1 H_α	21.2	−17.7[d]
			2 H_β	36.3	48.3
			2 H_γ	1.74	−4.0 [C(4)]
			2 H_γ	1.00	−1.4 [C(5), C(7)]
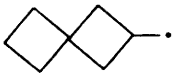		145	2 H_α	21.8	
			1 H_β	10.2	
			2 H_γ	1.65	
			6 H	0.27	

[a] P. J. Krusic and J. K. Kochi, *J. Am. Chem. Soc.*, 1968, **90**, 7155; J. K. Kochi, P. J. Krusic, and D. R. Eaton, *ibid.*, 1969, **91**, 1877. [b] From ref. 4; [c] INDO calc. hfs for H_δ and $H_\varepsilon \leqslant 0.1$ G, $<S^2> = 0.7633$. [d] INDO calculated $<S^2> = 0.7618$.

spiro[3.3]heptan-2-yl (**7**) and spiro[3.3)heptan-3-yl radicals (**9**) were observable. The fact that cyclopropyl radicals were observed indicates that hydrogen abstraction from cyclopropane competes successfully with hydrogen abstraction from the substrate. Since the C–H bond dissociation energy in cyclopropane (*ca.* 106 kcal mol^{-1})[17] is considerably greater than that of 'normal' secondary hydrogen atoms, this indicates that the rate of hydrogen abstraction from spiro[3.3]heptane is lower than that from open-chain cyclopentane or cyclohexane methylene groups. Strong spectra of the mixture of radicals (**7**) and (**9**) were obtained in neat di-t-butyl peroxide at 240 K. The spectrum of spiro[3.3]heptan-2-yl radicals showed a double triplet pattern, with each resonance line further split into a triplet of triplets by two non-equivalent sets of two γ-hydrogen atoms. The central lines showed an additional doublet second-order splitting. Unfortunately, the lines from the radical (**7**) all overlapped those from the radical (**9**), which made analysis difficult. Figure 2 shows one multiplet together with the computer simulation. The hfs values (Table 1) were also very similar to those of cyclobutyl radicals, except, of course, for the presence of an additional triplet splitting from one pair of γ-hydrogen atoms in the adjacent C_4 ring. Both $a(H_\alpha)$ and $a(H_\beta)$ in the radicals (**7**) and (**9**) indicate an electron distribution similar to that of cyclobutyl radicals. In contrast, both $a(H_\alpha)$ and $a(H_\beta)$ in spiro[2.3]hexan-2-yl radicals (**2**) are lower than the corresponding values for (**7**) and the other cyclobutyl-like radicals. The spiro radical (**7**) remains planar, as the hfs values indicate, and it is therefore most improbable that the spiro radical (**2**) deviates from planarity. Thus the absence of this lowering in the hfs of radical (**7**) supports the conclusion[4] that significant spin density is delocalised into the cyclopropyl ring in (**2**) by a pseudo-allyl type of effect.

INDO calculations[18] on spiro[2.3]hexan-2-yl radicals[4] predicted significant spin delocalisation into the cyclopropyl ring. We also carried out INDO calculations on the radicals (**7**) and (**9**), using fully optimised geometries computed by the UHF version of the MINDO/3 semi-empirical program.[19] The MINDO/3 calculations gave ΔH°_f values of 39 and 40 kcal mol^{-1} for the radicals (**7**) and (**9**), respectively. The radical centres were found to be planar with, in (**9**), C_α–C_β 148, C_β–C_γ 156, and C_α–H 109 pm, and in (**7**), C(2)–C(3) 148, C(3)–C(4) 153, C(1)–C(5) 156, and C(2)–H 109 pm; ring angles differed little from 90°. The INDO-calculated hfs values are given in Table 1. Although the calculated $a(H_\alpha)$ values for (**7**) and (**9**) underestimate the experimental hfs values and the calculated $a(H_\beta)$ values significantly exceed the experimental β-hfs values, the INDO results reproduce the trend of lower hfs for the radical (**2**). In the radical (**9**) the δ- and ε-hydrogen atoms from the adjacent ring were all calculated to have hfs $\leqslant 0.1$ G, in agreement with the absence of resolved long-range hfs in the experimental spectra. In the radical (**7**) the hfs values from the C(4) hydrogen atoms were calculated to be the largest, and we

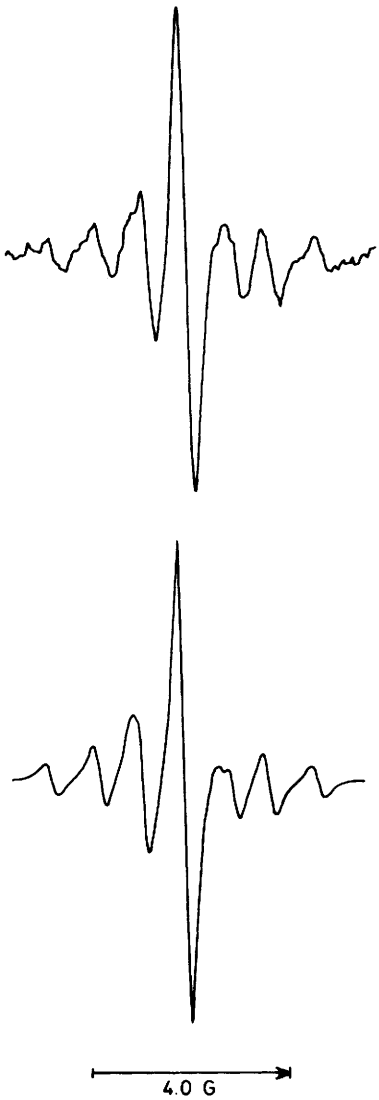

Figure 2. Single multiplet from the 9.4 GHz e.s.r. spectrum obtained on hydrogen abstraction from spiro[3.3]heptane at 250 K. The multiplet is a superposition of the starred multiplet (Figure 1) of the spiro-[3.3]heptan-3-yl (**9**) radical and the highest field multiplet of the spiro[3.3]heptan-2-yl radical (**7**)

View Article Online

Published on 01 January 1986. Downloaded by Michigan State University on 19/01/2016 17:04:04.

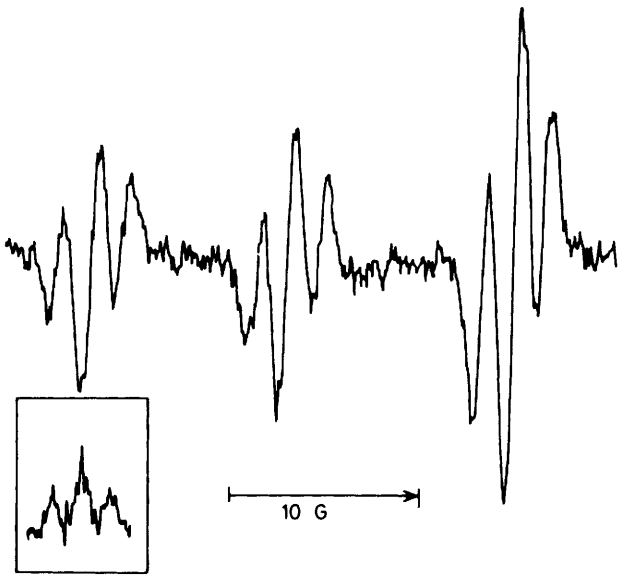

Figure 3. Low-field half of the 9.4 GHz e.s.r. spectrum of spiro-[3.3]heptylmethyl radicals (**15**) at 145 K. The inset shows the lowest field multiplet with second harmonic presentation

have tentatively ascribed the larger experimental $a(2H_\gamma)$ to these (Table 1). The INDO calculations gave roughly equal hfs values for the *trans*-and *cis*-hydrogen atoms at C(5) and C(7); it is not possible on this basis to decide which pair gives rise to the small remaining triplet splitting.

The relative concentrations of the radicals (**7**) and (**9**) generated on hydrogen abstraction from spiro[3.3]heptane were determined by computer simulation of the multiplet shown in Figure 2; the proportions of the two radicals were varied until best fit was achieved. The lines from the radical (**9**) are more prominent and this gives a superficial impression that (**9**) predominates. However, this appearance is deceptive and is due to a narrower line-width for the radical (**9**) and to the fact that the signal for the radical (**7**) is divided into nine components, some of which are obscured by the two components from the radical (**9**). At 250 K we obtained [(**7**)]/[(**9**)] = 2.0 ± 0.4; at 270 K the proportions were the same (within experimental error). Since there are twice as many hydrogen atoms at sites where abstraction would give the radical (**7**), this result indicates that hydrogen abstraction is essentially statistical with no activation at C(2) or equivalent cyclobutylmethyl sites. This is in agreement with a study of the photochlorination of methylcyclobutane, where it was found that the rate of hydrogen abstraction from the methyl group relative to the rate of hydrogen abstraction from the ring methylenes (3.8:1) was no different from the rate of abstraction of primary relative to secondary hydrogen atoms in alkanes (4.0:1).[20] Thus, as expected, an adjacent cyclobutyl ring does not activate a methylene group towards free radical attack.

On warming the solution of (**6**) in di-t-butyl peroxide above *ca.* 290 K the signals from the radical (**7**) decreased in intensity and a new radical appeared with a spectrum consisting of a triplet of triplets [$a(2H_\alpha)$ = 22.4, $a(2H_\beta)$ = 28.6 G]. At temperatures above 310 K only the signals from this new radical and the radical (**9**) were detected. On re-cooling the solution to 270 K the spectrum of the radical (**7**) reappeared and that of the new radical disappeared. The new triplet of triplets spectrum can be assigned to the rearranged cyclobutenylpropyl radical (**8**) (Scheme 1). Unfortunately, the signals were too weak and the lines of the radical (**7**) too badly overlapped by those of the

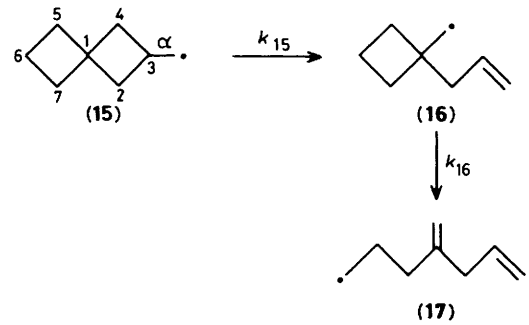

Scheme 3.

radical (**9**) for the kinetics of the rearrangement to be followed by e.s.r. spectroscopy. We estimate that the temperature at which the concentrations of the radicals (**7**) and (**8**) are about equal is 310 ± 5 K. This temperature (T_f) gives an approximate measure of the rates of rearrangements studied under e.s.r. conditions.[21] For cyclobutylmethyl radical a T_f value of 285 K was found,[21] and this indicates that spiro[3.3]heptan-2-yl radicals rearrange appreciably more slowly than cyclobutylmethyl radicals. In the rearrangement of the radicals (**7**) the rigid structure of the spiro ring system prevents the SOMO from attaining optimum overlap with the orbitals of the β,γ-bond; there is no such constraint in cyclobutylmethyl radicals. At the same time the relief of ring strain is less than in the cyclobutylmethyl radical rearrangement because the rearranged radical (**8**) contains the cyclobutenyl ring. These two factors readily account for the slower β-scission of radical (**7**) as compared with cyclobutylmethyl radicals.

E.s.r. Study of Spiro[3.3]*heptylmethyl Radicals* (**15**).—Radicals (**15**) were generated in the cavity of the e.s.r. spectrometer by bromine abstraction from 3-bromomethylspiro[3.3]heptane by triethylsilyl radicals and, at higher temperatures, by trimethyltin radicals. The spectrum obtained at 145 K is shown in Figure 3 and the e.s.r. parameters are in Table 1. We assign the spectrum to the spiro[3.3]heptylmethyl radical (**15**), which shows, in addition to the expected two α- and one β-hfs, a triplet splitting and, under high resolution (Figure 3; inset), a further seven-line structure. The 1.6 G triplet splitting is similar to the triplet γ-hfs found in cyclobutylmethyl radicals[21] and can be unequivocally assigned to the hydrogen atoms at C(2) and C(4), *cis* to the methylene radical centre.[10] The additional small septet hfs probably comes from the two hydrogen atoms at C(2) and C(4) *trans* to the methylene radical centre, together with the four ε-hydrogens.

The absolute magnitude of the β-hfs and the fact that $a(H_\beta)$ increased with increasing temperature shows that the radical (**15**) prefers the bisected conformation (**18**). We showed

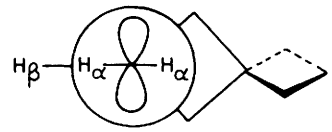

(**18**)

previously[10,22] that barriers to rotation about $\dot{C}_\alpha$–C_β bonds in radicals can be determined by fitting the observed temperature dependence of $a(H_\beta)$ with values calculated from equation (1),

$$<a(H_\beta)> = A + \tfrac{1}{2}B + \tfrac{1}{2}B\cos 2\theta_0\,[I_1(\lambda)/I_0(\lambda)] \quad (1)$$

View Article Online

Published on 01 January 1986. Downloaded by Michigan State University on 19/01/2016 17:04:04.

Table 2. Ring opening of spiro[3.3]heptylmethyl radicals (**15**)

T/K	10^8[(**15**)]/M	10^8[(**16**)]/M	$10^8 k_{15}/2k_t$/ mol dm^{-3}	k_{15}/s^{-1}
246	7.31	1.21	1.41	16.3
251	6.92	1.74	2.14	28.5
254	5.51	2.01	2.74	39.5
257	4.00	1.60	2.24	34.8
260	5.01	3.37	5.64	94.4
262	5.05	2.35	3.44	60.8
265	4.92	2.33	3.43	65.5
267	3.30	2.37	4.07	82.2
273	3.04	1.97	3.25	75.7
276	2.36	2.36	4.72	117.8

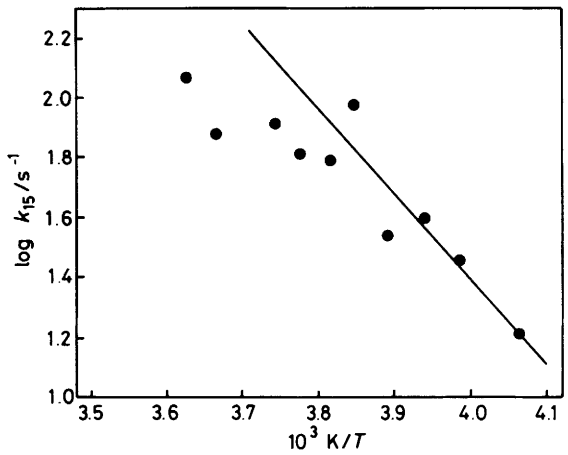

Figure 4. Arrhenius plot of the rate constants for rearrangement of spiro[3.3]heptylmethyl radicals (**15**)

where A, B, and θ_0 have their usual meaning,[23] $I_1(\lambda)$ and $I_0(\lambda)$ are modified Bessel functions, and $\lambda = V_0/kT$ (V_0 is the barrier to rotation). In the case of spiro[3.3]heptylmethyl radicals (**15**) we obtained excellent fit of the experimental to the calculated β-hfs values in the temperature range 130—250 K using $A = 2$, $B = 50$, $\theta_0 = 90°$ and $V_0 = 1.0$ kcal mol^{-1}. These parameters are essentially identical with those found for cyclobutylmethyl radicals,[10] and demonstrate the close structural analogy between the radical (**15**) and cyclobutylmethyl radicals.

At temperatures above 240 K the spectrum of the radical (**15**) began to weaken and was replaced by a new spectrum consisting of a triplet of triplets: $a(2H_\alpha) = 21.6$ G, $a(2H_\gamma) = 1.2$ G. At 280 K this new radical was the only species detected; on re-cooling the solution the new spectrum disappeared and that of the radical (**15**) reappeared. We attribute the new spectrum to the 1-allylcyclobutylmethyl radical (**16**) formed by β-scission of the radical (**15**). The concentrations of the radicals (**15**) and (**16**) were determined by double integration of suitable peaks in the e.s.r. spectra;[24,25] they are given in Table 2 together with the values of $k_{15}/2k_t$ derived by the usual kinetic treatment[26,27] [$2k_t$ is the rate constant for bimolecular self-reactions of (**15**)].

The termination rates of small to moderately sized transient radicals are diffusion controlled in solution and depend on the solution viscosity.[28–30] In order to evaluate $2k_t$ we have used Fischer's accurate data for the self-termination of t-butyl radicals in heptane[29] [equation (2)], and have corrected for the

$$\log[2k_t(\mathrm{Bu^t\cdot})/\mathrm{dm^3\ mol^{-1}\ s^{-1}}] = 11.63 - (2.30\ \mathrm{kcal\ mol^{-1}})/2.3RT \quad (2)$$

difference in viscosity of t-butylbenzene (the solvent used here) from that of n-heptane at each temperature.[10] The rearrangement rate constants (k_{15}) derived in this way are given in Table 2 and the Arrhenius plot is shown in Figure 4. It is evident from Figure 4 that the five or six rate constants in the low-temperature range 246—260 K lie close to a line with the 'normal' intercept of *ca.* 13.0 units on the log k_{15} axis. However, the higher-temperature results curve down below this line. This curvature is probably the result of a further rearrangement of the 1-allylcyclobutylmethyl radical (**16**). Because this radical itself has a cyclobutylmethyl-type structure it can undergo β-scission to give 4-methylenehept-6-enyl radicals (**17**). If this rearrangement occurs at the high-temperature end of the experimental range the result will be to reduce the concentration of the radicals (**16**), and hence calculated k_{15} values will be lower than they should be. The e.s.r. spectra were examined in the range 280—310 K for traces of the radical (**17**) but without success. This is not surprising because the spectra were too weak to show any clear signals in this temperature domain. Beckwith and Moad showed that 1-substituted cyclobutylmethyl radicals rearrange more slowly than the parent radicals.[31] This is consistent with our suggestion that the radicals (**16**) rearrange at a higher temperature than the spiro[3.3]heptylmethyl radicals (**15**), which carry no substituent at the 1-position.

Use of the rate constants of the lowest four, five, and six temperatures in least-squares calculations gave log A_{15} values of 11.4, 13.4, and 11.8, respectively, and activation energies E_{15} of 11.5, 13.7, and 11.9 kcal mol^{-1}, respectively. The calculated Arrhenius A-factors are close to the 'normal' value of 10^{13} s^{-1} found for other cyclobutylmethyl-type rearrangements.[10] The average activation energy, *i.e.* 12.4 ± 2 kcal mol^{-1}, is very close to that found for cyclobutylmethyl ring opening (11.7 ± 0.3 kcal mol^{-1})[10,11] and this confirms the conclusion drawn from the e.s.r. parameters that the radical (**15**) is structurally very similar to cyclobutylmethyl radicals.

We showed recently that the activation energies for β-scission in cyclobutylmethyl-type radicals can be represented by an Evans–Polanyi relationship[10] (3), where the rearrangement

$$E/\mathrm{kcal\ mol^{-1}} = 0.94\Delta H^\circ + 16.2 \quad (3)$$

enthalpies, ΔH°, are calculated by the Group Contributions method.[32] The ΔH°_f value of the rearranged radical (**16**) (58.3 kcal mol^{-1}) can easily be estimated from the group contributions, but ΔH°_f for spiro[3.3]heptylmethyl radicals (**15**) is uncertain because the ring strain in the spiro[3.3]heptane system is unknown. The ring strain in spiro[2.2]pentane exceeds twice the cyclopropane ring strain by[31,33] 8.3 kcal mol^{-1}. Hence, we expect the ring strain in spiro[3.3]heptane to exceed twice the cyclobutane ring strain, although the excess will be smaller than for spiropentane because the spirocarbon atom in spiro[3.3]heptane is less distorted. By using the experimental activation energy, equation (3) gives an estimate of ΔH°_f (**15**), *viz.* 62.3 ± 2.2 kcal mol^{-1}, from which the ring strain in (**15**) is calculated to be 52.5 ± 2.2 kcal mol^{-1}. This result is extremely close to twice the cyclobutane ring strain (52.4 kcal mol^{-1}),[31] and suggests that the excess of strain in the spiro[3.3]heptane ring system is close to zero and does not exceed 2—3 kcal mol^{-1}. An *ab initio* study (STO-3G basis) of spiro[3.3]heptane predicted the ring strain to be[34] 56.8 kcal mol^{-1}, *i.e.* 4.4 kcal mol^{-1} greater than twice the cyclobutane ring strain. A molecular mechanics calculation gave 54.9 kcal mol^{-1} for the ring strain,[35] suggesting 2.3 kcal mol^{-1} excess of strain. The present experimental results support the lower figure.

View Article Online

Published on 01 January 1986. Downloaded by Michigan State University on 19/01/2016 17:04:04.

Photochemical Reaction of Spiro[3.3]*heptane with Bromotrichloromethane and Bromine.*—The products of the photochemical reaction of (**6**) with bromotrichloromethane were $CHCl_3$ (51%), 3-bromospiro[3.3]heptane (**11**) (41%), C_2Cl_6 (<1%), and dibromides (8%). The reaction was stopped at about 50% consumption of (**6**). The main process is hydrogen abstraction at C(3) by trichloromethyl radicals to give chloroform and the spiro[3.3]heptan-3-yl radical (**9**), which then abstracts bromine from CCl_3Br to give (**11**). No trace of 2-bromospiro[3.3]heptane was observed. It is possible that the spiro[3.3]hept-2-yl radical (**7**) rearranges under the reaction conditions (20 °C) to give the cyclobutenylpropyl radicals (**8**); however, the n.m.r. spectrum of the mixture after complete reaction showed no significant signals in the alkene region. Thus trichloromethyl radicals preferentially abstract hydrogen at C(3) and H-abstraction at C(2) is negligible. The greater selectivity of $CCl_3\cdot$ in comparison with $Bu^tO\cdot$ may be due to steric hindrance to approach of the bulky $CCl_3\cdot$ at C(2) because of the proximity of the adjacent four-membered ring.

Photobromination of (**6**) in CCl_4 at 20 °C gave entirely analogous results. The bromine atoms abstract hydrogen selectively at C(3) to give the radicals (**9**), which in turn abstract bromine from molecular bromine giving 3-bromospiro[3.3]-heptane. No products from hydrogen abstraction at C(2) formed *via* spiro[3.3]heptan-2-yl radicals or from the rearranged radicals (**8**) were detected. These results confirm that there is no activation for hydrogen abstraction at C(2) and suggest that bulky radicals experience steric hindrance to approach at C(2).

Experimental

E.s.r. spectra were recorded with a Bruker ER200D spectrometer for degassed samples, sealed in Spectrosil tubes, irradiated with light from a 500 W high-pressure Hg arc. Solvents were cyclopropane, t-butylbenzene, and/or di-t-butyl peroxide. ^1H N.m.r. spectra were recorded with a Bruker WP80 instrument for $CDCl_3$ solutions at ambient temperature with Me_4Si as internal standard, unless otherwise indicated. Mass spectra were obtained with an A.E.I. MS902 spectrometer.

3-*Bromospiro*[3.3]*heptane* (**11**).—Spiro[3.3]heptane-3-carboxylic acid (**10**)[36] (2.0 g) and red mercury(II) oxide (1.9 g) in CCl_4 (50 ml) were heated at such a rate that the CCl_4 distilled out at *ca.* one drop per second.[12] After 15 min, Br_2 (2.9 g) in CCl_4 (20 ml) was added slowly over 1 h followed by CCl_4 (20 ml). The mixture was cooled; the mercury salts were removed by filtration; the filtrate was washed with 1M-NaOH (20 ml) and filtered again. The organic phase was washed with water, dried (Na_2SO_4), and distilled. The crude residue was purified by preparative g.l.c. on a 15 ft column packed with 10% SE30 on Chromosorb G(80—100 mesh); yield 0.4 g (16%); δ_H 4.4 (1 H, quintet, *J* 7 Hz), 2.25—2.85 (4 H, m), and 1.7—2.2 (6 H, m); δ_C 16.8, 34.6, 35.0, 36.2, 38.2, and 48.1.

Repeats of the reaction gave erratic results with yields often even lower. The method of Della and Patney with CH_2Br_2 as solvent[37] gave equally low yields.

Spiro[3.3]*heptane* (**6**)—*Method 1.* To the bromide (0.2 g) was added tri-n-butyltin hydride (1.5 g) and azobisisobutyronitrile (0.01 g), and the solution was stirred at 20 °C for 30 min with illumination by light from a 250 W Hg lamp. Volatile materials were distilled out of the reaction mixture under high vacuum to give *ca.* 10 mg of clear liquid which proved to be nearly pure (**6**); δ_H 1.91 (m).

Method 2. Spiro[3.3]heptane-3-carboxylic acid (**10**) was converted into the acid chloride using thionyl chloride. t-Butyl spiro[3.3]heptane-3-peroxycarboxylate (**12**) was then made by the procedure of Wiberg *et al.*[38] Over 1 h the spiro[3.3]heptane-3-carbonyl chloride (2.8 g) was added to a stirred mixture of dried t-butyl hydroperoxide (2.4 g) and dry pyridine (3.6 ml) in *p*-cymene (15 ml) cooled in an ice–salt bath. Stirring was continued for 1 h and then the mixture was poured onto ice (20 g). The aqueous phase was separated and extracted with *p*-cymene (10 ml), and the combined *p*-cymene layers were washed with cold 2M-H_2SO_4 (2 × 7 ml), ice–water (7 ml), cold Na_2CO_3 (3 ml), and then ice–water again (3 × 3 ml). The *p*-cymene solution was dried over Na_2SO_4. The peroxy ester was not isolated but the solution was filtered into a flask and heated at *ca.* 150 °C until the bubbles of CO_2 ceased (*ca.* 1 h). The contents of the flask were then distilled giving a volatile fraction, b.p. 60—85 °C at 760 Torr (1.5 g), plus residual *p*-cymene. G.l.c. analysis showed three products: peak 1 (48%), peak 2 (7%), and peak 3 (45%), which were separated by preparative g.l.c. on a 10% SE30–Chromosorb WAW column at 50 °C. Peak 1 was shown to be t-butyl alcohol by its ^1H n.m.r. spectrum; this was confirmed by retention time comparisons. Peak 2 had δ_H 1.6—2.0 (2 H, m), 2.0—2.4 (4 H, m), 2.55 (2 H, d, *J* 2 Hz), and 6.20 (2 H); *m/z* (%) 94(3), 93(3), 91(4), 79(20), 77(9), 67(10), 66(100), 65(14), 53(5), 51(5), 40(17), 39(20), and 27(9); and can be identified as spiro[3.3]hept-2-ene (**13**). Peak 3, spiro-[3.3]heptane (**6**), showed *m/z* (%) 96(2), 81(12), 68(97), 67(100), 55(10), 53(21), 41(16), 40(35), and 39(21). The 80 MHz n.m.r. spectrum showed a single multiplet at δ_H 1.91; the 360 MHz spectrum showed two multiplets, δ_H 1.76 (4 H, rough pentet) and 1.92 (8 H, rough triplets); simulations gave satisfactory fit with the coupling constants [see diagram (A)] $J_{ab} = J_{cd} = -15$ Hz, $J_{ac} = J_{bd} = 4$ Hz, $J_{ad} = J_{bc} = -3$ Hz, $J_{ae} = J_{bf} = J_{af} = J_{ae} = 10$ Hz, $J_{af} = J_{bc} = J_{cf} = J_{de} = 6.5$ Hz, $J_{ef} = -11$ Hz; δ_C 16.4 [C(3)], 35.2 [C(2)], and 44.1 [C(1)].

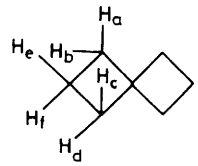

(A)

3-(*Bromomethyl*)*spiro*[3.3]*heptane.*—The acid (**10**) was reduced with $LiAlH_4$ to spiroheptan-3-ylmethanol in 61% yield using a standard procedure; δ_H 1.5—2.2 (10 H, m), 2.36 (1 H, pentet, *J* 7 Hz), and 3.58 (2 H, d, *J* 7 Hz). The crude alcohol (1.1 g) was dissolved in pyridine (25 ml) and the solution cooled in an ice–salt bath; tosyl chloride (1.7 g) was added slowly. After being stirred for 2 h the mixture was poured into 2M-HCl; the product crystallised on cooling. The tosyl derivative was filtered off, washed with water, and dried, giving 2.3 g of crude material. The tosylate (2.3 g) was added to a solution of LiBr (2 g) in dry acetone (75 ml) and the mixture was refluxed for 12 h. The solution was filtered, the acetone removed by distillation, and the product distilled; b.p. 85 °C at 2 Torr; yield 1.1 g (68%); δ_H 3.4 (2 H, d, *J* 7 Hz), 2.55 (1 H, m), and 1.55—2.3 (10 H, m); δ_C 16.4, 35.1, 35.5, 39.0, 39.5, and 40.1; *m/z* (no M^+) 162, 160, 109, 95, 93, 91, 81, 79, 68, and 67, consistent with the proposed structure. Pure samples for e.s.r. work were obtained by preparative g.l.c. using a 15 ft column packed with 10% SE30 on Chromosorb G (80—100 mesh).

Photochemical Reaction of Spiro[3.3]*heptane* (**6**) *with Bromotrichloromethane.*—Spiro[3.3]heptane (**6**) (0.36 mmol) and CCl_3Br (450 μl) were irradiated in a thin-wall Pyrex tube by light from a 250 W medium-pressure Hg arc at 20 °C for a total

View Article Online

Published on 01 January 1986. Downloaded by Michigan State University on 19/01/2016 17:04:04.

of 110 h. The progress of the reaction was monitored from time to time by g.l.c. and n.m.r. The chromatograms showed the presence of four significant products, identified by g.l.c.–mass spectrometry and by preparative g.l.c. separation on a 10 ft column packed with 20% Carbowax 20 M on Chromosorb WAW at 150 °C followed by ^{1}H n.m.r. At 110 h the products and proportions were: peak 1 (51%) $CHCl_3$; peak 2 (41%), *m/z* (%) 176(1), 174(1), 148(5), 146(5), 96(5), 95(59), 94(7), 93(5), 91(3), 81(6), 80(3), 79(24), 77(7), 69(8), 68(72), 67(100), 66(10), 65(10), 55(17), 53(17), 41(38), 40(23), and 39(33); ^{1}H n.m.r. essentially identical with that of 3-bromospiro[3.3]heptane (**11**) (see before); peak 3 (<1%) C_2Cl_6; peak 4 (8%), *m/z* (%) 175(4), 174(3), 173(4), 172(3), 148(2), 147(9), 146(49), 145(9), 144(2), 119(3), 117(3), 107(2), 105(2), 94(12), 93(77), 91(12), 81(4), 80(3), 79(9), 77(15), 69(15), 68(100), 67(53), 66(15), 65(28), 53(15), 51(7), 41(18), 40(23), and 39(34); δ_H 1.75—2.05 (2 H, m), 2.05—2.5 (6 H, m), and 2.85—3.1 (2 H, m), *i.e.* this peak is a dibromide $C_7H_{10}Br_2$, possibly a mixture of isomers. The products were accompanied by *ca.* 50% unchanged (**6**). The n.m.r. spectrum of the complete reaction mixture showed no signals in the alkene region. Reactions in a quartz tube gave the same products.

Photochemical Reaction of Spiro[3.3]*heptane* (**6**) *with Bromine.*—Spiro[3.3]heptane (**6**) (0.4 mmol) and bromine (0.4 mmol) in CCl_4 (450 μl) in a thin-wall Pyrex tube were irradiated by light from a 500 W medium-pressure Hg arc for 21 h at 20 °C. The chromatogram of the reaction mixture showed a single product, 3-bromospiro[3.3]hexane (**11**), together with unchanged (**6**). With an excess of bromine a complex series of products was obtained, which included (**11**) and the same dibromides as observed with CCl_3Br, together with a number of unidentified components. The ^{1}H n.m.r. spectrum of the reaction mixture showed no signals in the alkene region.

Acknowledgement
We thank NATO for a research grant.

References
1 C. Jamieson, J. C. Walton, and K. U. Ingold, *J. Chem. Soc., Perkin Trans. 2*, 1980, 1366.
2 C. Roberts and J. C. Walton, *J. Chem. Soc., Perkin Trans. 2*, 1983, 879.
3 C. Roberts and J. C. Walton, *J. Chem. Soc., Chem. Commun.*, 1984, 1109.
4 C. Roberts and J. C. Walton, *J. Chem. Soc., Perkin Trans. 2*, 1985, 841.
5 A. J. Kennedy, J. C. Walton, and K. U. Ingold, *J. Chem. Soc., Perkin Trans 2*, 1982, 751.
6 P. J. Krusic, J. P. Jesson, and J. K. Kochi, *J. Am. Chem. Soc.*, 1969, **91**, 4566.
7 B. Maillard and J. C. Walton, *J. Chem. Soc., Chem. Commun.*, 1983, 900.
8 T. Kawamura and T. Yonezawa, *J. Chem. Soc., Chem. Commun.*, 1976, 948.
9 P. M. Blum, A. G. Davies, and R. A. Henderson, *J. Chem. Soc., Chem Commun.*, 1978, 569.
10 B. Maillard and J. C. Walton, *J. Chem. Soc., Perkin Trans. 2*, 1985, 443.
11 B. Weinstein, A. H. Fenselau, and J. G. Thoene, *J. Chem. Soc.*, 1965, 2281.
12 J. Cason and D. M. Walba, *J. Org. Chem.*, 1972, **37**, 669.
13 R. W. Fessenden, *J. Chem. Phys.*, 1962, **37**, 747.
14 R. W. Fessenden and R. H. Schuler, *J. Chem. Phys.*, 1963, **39**, 2147.
15 W. P. L. Carter and D. C. Tardy, *J. Chem. Phys.*, 1974, **78**, 1573.
16 A. L. J. Beckwith and K. U. Ingold, in 'Rearrangements in Ground and Excited States,' vol. 1, ed. P. de Mayo, Academic Press, New York, 1980, p. 161.
17 D. F. McMillen and D. M. Golden, *Annu. Rev. Phys. Chem.*, 1982, **33**, 493.
18 J. A. Pople and D. L. Beveridge, 'Approximate Molecular Orbital Theory,' McGraw-Hill, New York, 1970.
19 W. Thiel, P. Weiner, J. Stewart, and M. J. S. Dewar, Quantum Chemistry Program Exchange, No. 428, University of Indiana, Indiana, 1981.
20 J. M. Tedder and J. C. Walton, *Adv. Free Radical Chem.*, 1980, **6**, 155.
21 K. U. Ingold, B. Maillard, and J. C. Walton, *J. Chem. Soc., Perkin Trans. 2*, 1981, 970.
22 M. L. Kemball, J. C. Walton, and K. U. Ingold, *J. Chem. Soc., Perkin Trans. 2*, 1982, 1017.
23 J. K. Kochi, *Adv. Free Radical Chem.*, 1974, **5**, 189.
24 G. B. Watts, D. Griller, and K. U. Ingold, *J. Am. Chem. Soc.*, 1972, **94**, 8784.
25 D. Lal, D. Griller, S. Husband, and K. U. Ingold, *J. Am. Chem. Soc.*, 1974, **96**, 6356.
26 B. Maillard, D. Forrest, and K. U. Ingold, *J. Am. Chem. Soc.*, 1976, **98**, 7024.
27 D. Griller and K. U. Ingold, *Acc. Chem. Res.*, 1980, **13**, 317.
28 D. Griller and K. U. Ingold, *Acc. Chem. Res.*, 1980, **13**, 193.
29 H. Schuh and H. Fischer, *Int. J. Chem. Kinet.*, 1976, **8**, 341.
30 C. Huggenberger and H. Fischer, *Helv. Chim. Acta*, 1981, **64**, 338.
31 A. L. J. Beckwith and G. Moad, *J. Chem. Soc., Perkin Trans. 2*, 1980, 1083.
32 S. W. Benson in 'Thermochemical Kinetics,' 2nd edn., Wiley, New York, 1976.
33 J. Kao and L. Radom, *J. Am. Chem. Soc.*, 1978, **100**, 760.
34 J. Kao and L. Radom, *Tetrahedron*, 1978, **34**, 2515.
35 P. Gund and T. M. Gund, *J. Am. Chem. Soc.*, 1981, **103**, 4458.
36 E. Buchta and K. Geibel, *Justus Liebigs Ann. Chem.*, 1961, **648**, 36.
37 F. W. Della and H. K. Patney, *Synthesis*, 1976, 251.
38 K. B. Wiberg, B. R. Lowry, and T. H. Colby, *J. Am. Chem. Soc.*, 1961, **83**, 3998.

Received 17*th June* 1985; *Paper* 5/1012