View Article Online / Journal Homepage / Table of Contents for this issue

Published on 01 January 1954. Downloaded by Michigan State University on 27/01/2016 23:32:43.

A VOLMUETRIC CALORIMETER FOR HEATS OF IMMERSION OF SOLIDS IN LIQUID NITROGEN

By J. J. Chessick, G. J. Young and A. C. Zettlemoyer
Surface Chemistry Laboratory, Lehigh University, Bethlehem, Pa., U.S.A.

Received 4th January, 1954

A low-temperature calorimeter to measure heats of immersional wetting in liquid nitrogen has been constructed. The heats of immersion of magnesia, silene, alumina and Graphon (a graphitized carbon black) in liquid nitrogen were found to be practically the same. Thus, a simple determination of the heat evolved in terms of the volume of liquid nitrogen vaporized when the clean solid is broken under the liquid may be used to measure specific area.

Theoretical values for the heat of immersion of magnesia in liquid nitrogen have been calculated by two methods from adsorption data, and were found to compare favourably with the experimental value. The contribution of the free-energy term to the heat of immersion was approximately one-third that of the $T\Delta S$ contribution.

Immersional calorimetry for the study of systems at or near room temperatures has been well developed [1, 2, 3] and has led to valuable data concerning the interaction between surface and adsorbate supplementary to that obtained from gas adsorption studies. To obtain such information from the immersion of a solid in a liquid whose normal temperature is far removed from room temperature, special procedures are required to detect the minute temperature changes resulting from the wetting of a solid by the liquid.

A simple and accurate method has been developed for the measurement of the heats of immersion of solids in liquid nitrogen at its boiling point at − 195°. This technique, the measuring of the volume of liquid vaporized, requires none

View Article Online

of the elaborate and expensive equipment usually used in immersional calorimetry and, in addition, can be applied to the immersion of solids in other liquids at their boiling points.

EXPERIMENTAL

LOW-TEMPERATURE IMMERSIONAL CALORIMETER.—The low temperature calorimeter is shown in fig. 1. Heat effects are measured by the amount of liquid nitrogen which is vaporized and collected as a gas when a clean sample is broken under the liquid. The calorimeter consists of two sections of a large glass tube joined by means of a 45/50 standard taper joint. A hollow tube A with a shield B, to prevent spattering of liquid nitrogen, is sealed to the upper calorimeter section. The breaker rod C passes through this tube and rests on top of the sample tube D. A tight fitting piece of rubber tubing is used to form an air-tight seal between this tube and the breaker rod; the tubing allows sufficient movement of the rod to break the sample tube. The exit tube E is connected to a gas burette by means of rubber tubing. The calorimeter is immersed in a large Dewar flask containing liquid nitrogen. Liquid nitrogen is introduced into the calorimeter itself through tube E.

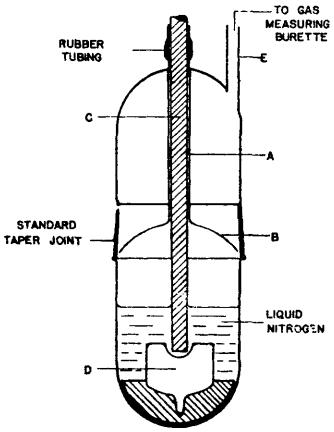

FIG. 1.—Calorimeter.

SAMPLE TUBE BREAKING.—The sample tubes are specially constructed so that the bottoms have very thin walls. The tubes rest on a formed rubber support with the breaker rod immediately above the thin wall portion. A light tap of the breaker rod is sufficient to pierce the sample tube. Blank runs indicate that the heat effect resulting from breaking in this manner is so small that it contributes only from 5 to 15 ml to the total amount of gas evolved. A correction of 10 ml was applied to all measurements.

RATING PERIODS.—Once temperature equilibrium between the calorimeter and bath is reached the amount of nitrogen gas evolved each minute is determined by displacement of water from a gas burette. The amount of gas evolved was found to be constant for periods of 0·5 to 1·0 h, and is a function of the purity of liquid nitrogen used and the barometric pressure; the most pronounced influence, however, is that produced by the latter. The rates varied from 20 to 50 ml of gas evolved per minute using commercial liquid nitrogen with measured vapour pressures between 79 and 82 cm Hg. No runs were made using a particular liquid nitrogen supply if the rating period exceeded 50 ml per minute.

PROCEDURE.—For the results described below, samples weighing 4 to 10 g were evacuated under the conditions listed in table 1, then were sealed off under vacuum and

TABLE 1.—HEAT OF IMMERSION OF SOLIDS IN LIQUID NITROGEN AT − 195° C

sample	specfic area m^2/g	heat of immersion $ergs/cm^2$	number of determinations	activation	
				time h.	temp. °C
Graphon (*a*)	83·0	− 104 ± 1	3	24	25
Silene (EF) (*b*)	51·6	− 102 ± 1	3	24	25
alumina (F10) (*c*)	119·2	− 104 ± 5	4	2	400
magnesia " 2640 " (*d*)	112·7	− 105 ± 4	4	1	250

(*a*) Lot L-2739, Godfrey L. Cabot Co., Boston, Mass.; a graphitized carbon black; the maximum amount of surface oxide has been estimated to occupy no more than 1/1500 of the total area: *Thermodynamics of the Adsorption of Water on Graphon*, G. J. Young, J. J. Chessick, F. H. Healey and A. C. Zettlemoyer, to be published, *J. Physic. Chem.*

(*b*) ppt. calcium silicate, Pittsburg Plate Glass Co., Pittsburg, Pa.

(*c*) Lot 202, 8-14 mesh, Aluminum Co. of America, Pittsburg, Pa.

(*d*) furnished by Westvaco Chemicals Division, Food Machinery Corporation.

Published on 01 January 1954. Downloaded by Michigan State University on 27/01/2016 23:32:43.

View Article Online

Published on 01 January 1954. Downloaded by Michigan State University on 27/01/2016 23:32:43.

transferred to the calorimeter. Before joining the two sections of the calorimeter, Apiezon M grease was applied to the standard taper joint. The entire calorimeter was placed in a large Dewar flask and liquid nitrogen was added to the flask until the liquid level was about 1in. above the top of the calorimeter. After a few minutes, 250 ml of liquid nitrogen was added to the calorimeter itself through the exit tube. Rubber tubing leading to the gas burette was then attached to the exit tube and the displacement of water by the nitrogen gas evolved was noted. The maximum time for temperature equilibrium between the calorimeter and bath to be reached was 3 h. A time against gas volume curve was followed until a steady rate of gas evolved was obtained over a 10-min period. The sample was broken under the liquid and the time noted. Time-volume readings were continued for 10-15 min after breaking. The heat of immersion was always evolved within less than 1 min after breaking. The smallest volume of gas evolved was about 100 ml s.t.p.; the average volume was about 300 ml.

The gas evolved as a result of the wetting process was corrected for the height of the column of water in the gas burette, as well as for the presence of water vapour, then converted into ml evolved at s.t.p. The heat of immersion in ergs/cm^2 was calculated from the formula:

$$h'_{(SL)} = -\left(\frac{\Delta V(\text{ml, s.t.p.})}{22{,}400}\ \frac{1333}{\text{wt.}}\ \frac{4.184 \times 10^7}{\text{area cm}^2/\text{g}}\right),$$

where 1333 cal/mole is the heat of vaporization of liquid nitrogen.

ADSORPTION MEASUREMENTS.—Isotherm data at 77·8 and 72·3° K for the adsorption of nitrogen on magnesia "2642" were selected from the results of a study previously conducted in this laboratory; a detailed discussion of these earlier experimental techniques has been fully described.[4]

RESULTS

REPRODUCIBILITY.—Values of the heats of immersion for a variety of solids from liquid nitrogen are tabulated in table 1. The average deviation represents a measure of the reproducibility of the results. The maximum deviation amounts to about 5 % which is good agreement because a combination of factors such as weighing, pretreatment, activation and evacuation of the samples as well as direct calorimetric measurements affect these values.

An important observation is the fact that the values of the heats of immersion are practically the same for these four solids. Especially with the hydrophobic Graphon in the group, the surfaces of these solids are considerably different; therefore, this finding suggests that the volume of gas evolved when 1 g of a clean solid is immersed in liquid nitrogen may be taken as a measure of the specific area.

DISCUSSION

When a non-porous solid is immersed in a liquid, the solid surface with its energy disappears and is replaced by a solid-liquid interface. The heat of emersion [5] for the process is given by the relationship:

$$h_{SL} = \left[\gamma_S - \gamma_{SL} - T\left(\frac{\partial\gamma_S}{\partial T} - \frac{\partial\gamma_{SL}}{\partial T}\right)\right]_{p,\Sigma}, \qquad (1)$$

where γ_S and γ_{SL} are the free surface energies of the clean solid and the solid-liquid interface at temperature T, and Σ is the surface area of the solid. The value of h_{SL} for the emersion of MgO from liquid nitrogen at − 195° was obtained experimentally and compared with values calculated by two methods using adsorption data. It was pertinent to inquire, also, into the relative importance of the contributions to the heat of emersion for this process by both the free energy and entropy terms.

View Article Online

Published on 01 January 1954. Downloaded by Michigan State University on 27/01/2016 23:32:43.

CALCULATED HEAT OF EMERSION FROM ISOSTERIC HEATS OF ADSORPTION

The difference in the internal energy E_L of a liquid adsorbate in equilibrium with vapour at T, and the energy E_a of the adsorbate molecules is given by the relationship [6]

$$E_L - E_a = (h_{SL} - h_{S_fL})/N_a, \tag{2}$$

where h_{SL} and h_{S_fL} are the heats of emersion of a clean solid and a solid with N_a adsorbed molecules. The term is related to the isosteric heat q_{ST} by an equation readily obtained from eqn. (91) of Hill: [7]

$$h_{SL} - h_{S_fL} = \int_0^{N_a} q_{ST} dN_a - N_a \Delta H_v, \tag{3}$$

where ΔH_v is the molar heat of vaporization of nitrogen. The term $(h_{SL} - h_{S_fL})$ can thus be obtained by graphical integration of a q_{ST} against N_a plot.

The heat of immersion of a solid, which has been exposed to the saturated vapour of the liquid until the adsorbed film attains equilibrium with respect to the vapour, is given by the equation: [8]

$$h'_{SL} = -\left[\left(\gamma_L - T\frac{\partial \gamma_L}{\partial T}\right)\cos\theta + T\gamma_L \sin\theta \frac{\partial \theta}{\partial T}\right], \tag{4}$$

where γ_L is the free energy surface of the liquid and θ is the contact angle of the liquid on the surface. If $\theta = 0$, then the heat of emersion is

$$h_{S_eL} = \gamma_L - T(\partial \gamma_L/\partial T) = h_L. \tag{5}$$

Eqn. (5) represents the heat content of the surface of the liquid used. The value of this quantity for liquid nitrogen (25·2 ergs/cm^2 at 74·9 K) was obtained from the surface tension and temperature variation of the surface tension of the liquid. The heat of emersion h_{SL} of clean MgO was calculated to be 100 ergs/cm^2 from a knowledge of h_L and the differences in the heats of emersion at saturation obtained from eqn. (3). This value compares with the value of 105 ergs/cm^2 found experimentally.

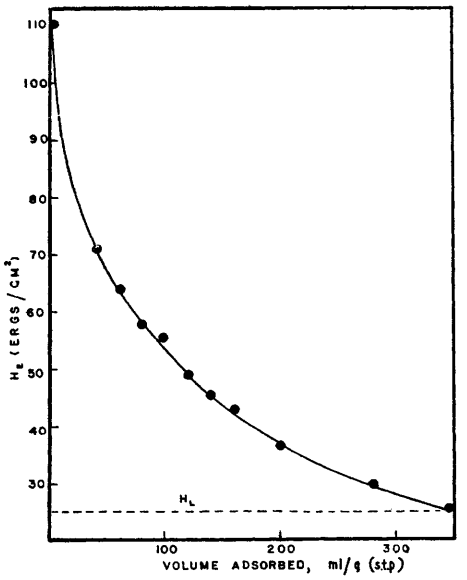

2.—Heat of emersion of magnesia from liquid nitrogen.

The calculated values for the heat of emersion of MgO are shown plotted in fig. 2 as a function of the volume of nitrogen adsorbed. The heat values approach the value for the heat content of a liquid nitrogen surface only at high surface coverage, *ca.* 10 molecular layers.[9]

CALCULATED HEAT OF EMERSION FROM ABSOLUTE ENTROPY VALUES

The equilibrium heats of adsorption, $H_G - H_a$, and the corresponding integral entropy values, $S_G - S_a$, where the subscript G refers to gaseous nitrogen equilibrium with the adsorbed film a were calculated for the adsorption of nitrogen on MgO.[10] The equilibrium heats were obtained from the Clausius-Clapeyron equation at constant spreading pressure ϕ. Thus it was necessary to

View Article Online

Published on 01 January 1954. Downloaded by Michigan State University on 27/01/2016 23:32:43.

determine ϕ as a function of the equilibrium pressures at two temperatures from adsorption data by graphical integration of the Gibbs equation:

$$\phi = \gamma_s - \gamma_{s_f} = kT\int_0^p \Gamma \mathrm{d} \ln p, \tag{6}$$

where Γ is the surface concentration. The equilibrium and isosteric heats of adsorption are plotted in fig. 3 as a function of the volume adsorbed.

When the contact angle of a liquid on a solid is zero, and, further, if the film formed on a solid in equilibrium with the saturated vapour of the liquid is duplex then

$$\gamma_{s_e} = \gamma_{SL} + \gamma_L, \tag{7}$$

and eqn. (1) can be written in the form

$$h_{SL} = \phi_e + \gamma_L - T\left(\frac{\partial \phi_e}{\partial T}\right) - T\left(\frac{\partial \gamma_L}{\partial T}\right). \tag{8}$$

The temperature coefficient $\partial\phi_e/\partial T$ of the difference in the free surface energy of a clean solid and a film covered solid is related to the difference in the integral entropy term

$$\partial\phi_e/\partial T = -N_a k \ln X + N_a(S_a - S_L). \tag{9}$$

At saturation the relative pressure X of the gas in equilibrium with the adsorbed film is equal to unity, thus

$$\partial\phi_e/\partial T = N_a(S_a - S_L). \tag{10}$$

The term $(S_a - S_L)$ was obtained from the equilibrium heat of adsorption at saturation and a knowledge of the entropy of vaporization of liquid nitrogen at 74·9° K.

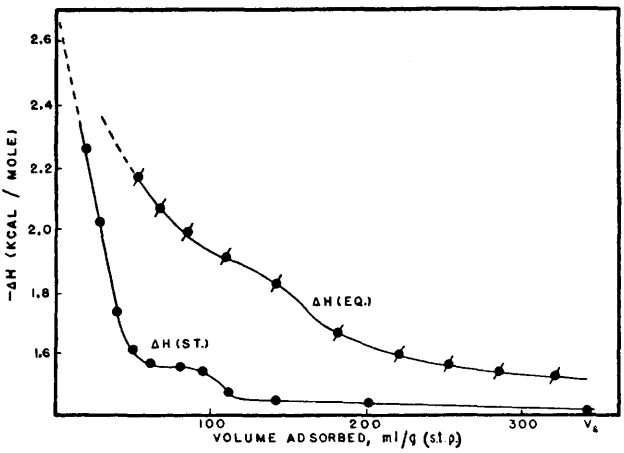

FIG. 3.—Isosteric and equilibrium heats of adsorption of nitrogen on magnesia.

Table 2 contains values for measured and calculated quantities used to obtain the heat of emersion of magnesia from liquid nitrogen. A value of 117 ergs/cm^2 was calculated from eqn. (9). The $\partial\phi_e/\partial T$ term was obtained from entropy data (eqn. (10)). This value of 117 agrees fairly well with the value of 110 ergs/cm^2 obtained from isosteric heat data (eqn. (3)) as well as with the experimental value of 105 ergs/cm^2. It is also evident from table 2 that the $T\Delta S$ term contributes most to the heat term, that is about three times more than the free energy contribution.

View Article Online

TABLE 2.—FREE ENERGY AND ENTROPY VALUES
$T = 74{\cdot}9°$ K

terms	values ergs/cm² deg.		
$\partial(\gamma_S - \gamma_{S_e})/\partial T$	$-0{\cdot}92$ (a)		
$\partial(\gamma_S - \gamma_{SL})/\partial T$	$-1{\cdot}22$		
	ergs/cm²		
γ_L	9·39		
$\partial\gamma_L/\partial T$	$-0{\cdot}22$		
ϕ_e	22·3		
$h_{SL} - h_{S_eL}$		85·0	
h_{S_eL}		25·2	
$\Delta F = \gamma_S - \gamma_{SL}$	31·7		
$T\Delta S = T(\partial\gamma_S - \gamma_{LS})/\partial T$	85·5		
h_{SL}	117·0 (b)	110·0 (c)	105 ± 4 exp.

(a) from eqn. (10).
(b) from eqn. (8), based on entropy values.
(c) from eqn. (3), based on isosteric heat values.

The authors gratefully acknowledge the financial support provided by the Office of Naval Research, Project NR 057-186, Contract N8onr—74300.

1 Boyd and Harkins, *J. Amer. Chem. Soc.*, 1942, **64**, 1190.
2 Hutchinson, *Trans. Faraday Soc.*, 1947, **43**, 443.
3 Zettlemoyer, Young, Chessick and Healey, *J. Physic. Chem.*, 1953, **57**, 649.
4 Zettlemoyer and Walker, *Ind. Eng. Chem.*, 1947, **39**, 69.
5 Because of the convention established by Harkins, the heat of emersion will be discussed in the theoretical section of this paper. Furthermore, the definition of the spreading pressure $\phi = \gamma_S - \gamma_{S_f}$ has been conventionally established for the desorption process.
6 Jura and Hill, *J. Amer. Chem. Soc.*, 1952, **74**, 1498.
7 Hill, *J. Chem. Physics*, 1949, **17**, 520.
8 Harkins, *The Physical Chemistry of Surface Films* (New York, Reinhold Publishing Co., 1952), p. 274.
9 In contrast, heat values for the emersion of asbestos from water approach the surface enthalpy of liquid water very nearly after the completion of a unimolecular layer.[3]
10 Hill, *J. Chem. Physics*, 1949, **17**, 520.

Published on 01 January 1954. Downloaded by Michigan State University on 27/01/2016 23:32:43.