ResearchGate

See discussions, stats, and author profiles for this publication at: https://www.researchgate.net/publication/231593374

Regioselective cleavage of 2-methyltetrahydrofuran: a versatile synthesis of 1-halo-4-pentanols and 4-halo-1-pantanols

ARTICLE *in* THE JOURNAL OF ORGANIC CHEMISTRY · AUGUST 1986

Impact Factor: 4.72 · DOI: 10.1021/jo00367a025

CITATIONS
13

READS
16

2 AUTHORS, INCLUDING:

Veejendra Kumar Yadav
Indian Institute of Technology Kanpur

98 PUBLICATIONS **1,203** CITATIONS

SEE PROFILE

Available from: Veejendra Kumar Yadav
Retrieved on: 02 February 2016

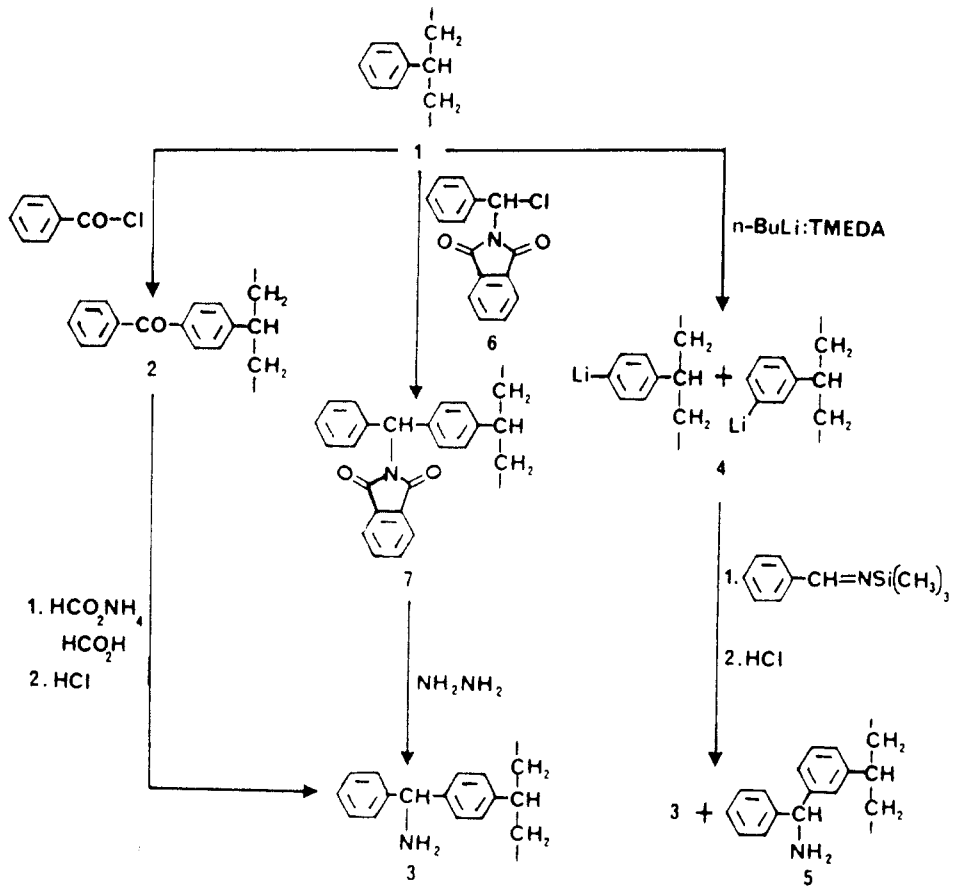

Figure 1. Syntheses of benzhydrylamine resin.

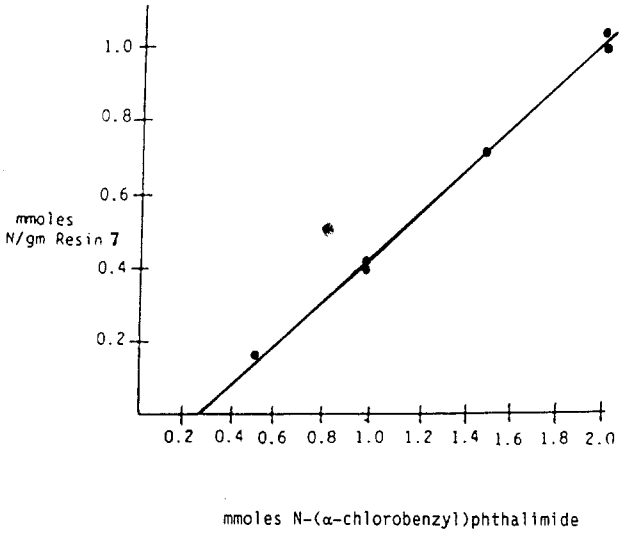

Figure 2. Degree of amidoalkylation as a function of the amount of *N*-(α-chlorobenzyl)phthalimide.

I. Refluxing ethanolic hydrazine readily converts resin 7 to benzhydrylamine resin 3. The extent of final substitution can be predictably controlled from 0.1 to 1.0 mmol/g resin by varying the amount of 6 as shown in Figure 2.[13] This synthetic route provides benzhydrylamine resin 3 free of any extraneous functionality and at a predetermined substitution.

Experimental Section

Elemental analyses were performed on a Perkin-Elmer 240 apparatus. Infrared spectra were recorded as potassium bromide disks on a Perkin-Elmer 137 spectrophotometer.

Phenylaminomethyl-Polystyrene-1% Divinylbenzene (Benzhydrylamine Resin), Typical Procedure. Washed and dried styrene-1% divinylbenzene copolymer resin (Bio-Rad Laboratories, S-X1, 200-400 mesh beads) was suspended in 1,2-dichloroethane (25 mL/g of resin) containing *N*-(α-chlorobenzyl)phthalimide.[12] A 100% excess of stannic chloride was then added dropwise with vigorous stirring. When the addition was complete the reaction was stirred for 2 h. The mixture was filtered and the resin washed with CH_2Cl_2, ethanol, 1:1 (v/v) ethanol in water, and ethanol and dried in vacuo. The IR spectrum showed phthalimide carbonyl bands at 1710 and 1775 cm^{-1}. The phthalimidobenzyl resin in ethanol (20 ml/g of resin) containing 10% hydrazine was refluxed overnight. The reaction was filtered hot and the resin washed with five portions of hot ethanol and five portions of hot methanol and dried in vacuo. The IR bands at 1710 and 1775 cm^{-1} were absent.

Acknowledgment. I thank Edith A. Reich for the elemental analyses.

Registry No. 1, 9003-70-7; 6, 69177-60-2.

(13) In those cases investigated the final substitution of resin 3 has agreed closely with the values obtained for resin 7 both by nitrogen analysis and amino acid analysis.

Regioselective Cleavage of 2-Methyltetrahydrofuran: A Versatile Synthesis of 1-Halo-4-pentanols and 4-Halo-1-pentanols

Veejendra K. Yadav and Alex G. Fallis*

Department of Chemistry, Memorial University of Newfoundland, St. John's, Newfoundland, Canada A1B 3X7

Received March 5, 1986

Differential Functionalization of small molecules for further manipulation is a frequent requirement in organic synthesis. Recently, as part of a larger synthetic project,

 © 1986 American Chemical Society

we required both 1-bromo-4-pentanol (5) and its isomeric acetate 1-acetoxy-4-bromopentane (9). As described below, they were prepared directly from 2-methyltetrahydrofuran (1) by regioselective cleavage in which advantage was taken of the different steric environment of the two oxygen–carbon bonds. This difference was enhanced by employing cleavage reactions that proceed via different mechanistic pathways and thus led to the facile preparation of 3–5 and 9 from the common, readily available starting material 1.

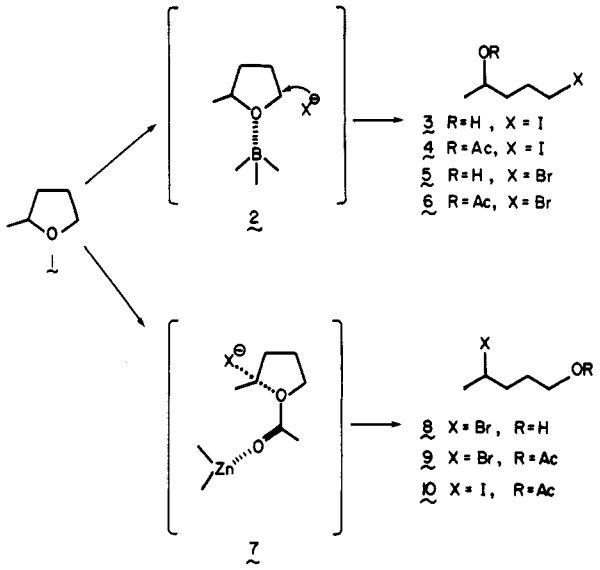

A variety of different reagents have been utilized for ether cleavage,[1,2] but often many of these display a disappointing level of selectivity in nonsymmetrical cyclic systems. Boron tribromide was reported to give nonregiocontrolled ring opening of 2-methyltetrahydrofuran,[3] while dimethylboron bromide afforded a 3.5:1 ratio of 5 and 8.[4] In contrast, the combination of aluminum trichloride/sodium iodide/acetonitrile afforded the primary iodide 3 exclusively in high yield with an excess of the reagent.[5] Recently boron trifluoride/iodide ion was shown to be a mild reagent for ring opening cyclic ethers[6] and afforded 4-iodobutanol from tetrahydrofuran, although no examples of cleavage of unsymmetrical cyclic ethers were reported. It was anticipated that a Lewis acid such as boron trifluoride should complex preferentially with the ether oxygen followed by halide ion attack at the sterically less hindered center. Thus 1-halo-4-pentanols should result from the exposure of 2-methyltetrahydrofuran to a bulky halide ion source in the presence of a suitable Lewis acid. In practice, treatment of 1 with either tetrabutylammonium iodide or tetraethylammonium bromide plus boron trifluoride etherate gave the compounds 3 and 5 exclusively in modest yields (30–50%) after 16–20 h at 21 °C (or ~6 h at 61 °C). These products presumably arose via an intermediate of type 2 and were not contaminated with any of their positional isomers. In contrast, lithium bromide in dichloromethane containing boron trifluoride etherate was not selective, emphasizing the importance of a bulky counterion, and a 1:1 mixture of 5 and 8 was obtained.

Several years ago it was demonstrated[7-9] that tetrahydrofuran could be converted to 1-acetoxy-4-bromobutane by the action of acetyl bromide in the presence of zinc chloride as a catalyst. Subsequent studies, by Goldsmith and co-workers,[10] with the related acetic anhydride/magnesium bromide reagent, established that the reaction with 2-methyltetrahydrofuran proceeds via an S_N2 process with inversion of configuration to provide an ~4:1 ratio of 9 to 6 in 70% yield. Related investigations using acetyl chloride/sodium iodide[11] afforded a ~1:1 mixture of 4 and 10. The regioselectivity was enhanced significantly by using a bulky acid chloride (pivaloyl chloride/sodium iodide) to provide the inverse substitution pattern in which the primary iodide predominated (97:3). Acetyl bromide alone afforded a 3:1 mixture of 9 and 6, while acetyl *p*-toluenesulfonate gave selectively the secondary tosylate from which bromide 9 was prepared with lithium bromide.[12] It has also been established that 4-chloropentyl benzoates result from 2-methyltetrahydrofuran after exposure to either benzoyl chloride/(chlorobenzyl)bis(triphenylphosphine)palladium(II)/tributyltin chloride[13] or benzoyl chloride and transition-metal hexacarbonyls.[14]

These various results suggested that treatment of 2-methyltetrahydrofuran with acetyl bromide and zinc chloride should give the desired bromoacetate 9 as the major product via a reactive intermediate of type 7. This has been accomplished in 93% yield, by treating 2-methyltetrahydrofuran with acetyl bromide/zinc chloride at 0 °C followed by 2.5 h at reflux. Unfortunately the selectivity was not quite complete, since some of 6 (~10%) was also formed.

These procedures provide a direct method for the controlled cleavage of 2-methyltetrahydrofuran and should find wider application for the selective preparation of diverse synthetic intermediates from unsymmetrical cyclic ethers.

Experimental Section

Boiling points are uncorrected. Proton magnetic resonance spectra were measured at 60 MHz with a Varian EM 360 spectrometer. Signal positions are reported in ppm downfield from tetramethylsilane (δ scale) as an internal standard, the multiplicity, number of protons, coupling constants, and proton assignments are indicated in parentheses. Flash chromatography using BDH silica gel Kieselgel 60, 230–400 mesh, was employed for all column chromatography. Solutions in organic solvents were dried over anhydrous magnesium sulfate and stripped of solvent with a Buchi rotary evaporator connected to a water aspirator. Unless otherwise indicated all reactions were conducted under an atmosphere of dry nitrogen.

1-Bromo-4-pentanol (5). To a solution of tetraethylammonium bromide (11.3 g, 52.5 mmol, Aldrich) and 2-methyltetrahydrofuran (4.31 g, 50 mmol, Aldrich) in anhydrous chloroform (65 mL) was added boron trifluoride etherate (6.5 mL, 52.5 mmol, Aldrich) and the reaction stirred at 21 °C for 20 h (or the solution heated at reflux for 6 h). The reaction was quenched with saturated aqueous sodium bicarbonate, the aqueous layer was separated and extracted with chloroform, the combined chloroform extracts were washed with water (2 × 30 mL) and brine (30 mL), dried, filtered, and concentrated, and the product was purified by distillation to give 5:[15] 4.15 g (50%); bp 49–50 °C (0.05

(1) Burwell, R. I., Jr., *Chem. Rev.* **1954**, *54*, 615.
(2) Bhatt, M. V.; Kulkarni, S. U. *Synthesis* **1983**, 249.
(3) Kulkarini, S. U.; Patil, V. D. *Heterocycles* **1982**, *18*, 163.
(4) Guindon, Y.; Yoakim, C.; Morton, H. E. *Tetrahedron Lett.* **1983**, *24*, 2969.
(5) Node, M.; Kajimoto T.; Nishide, K.; Fujita, E.; Fuji, K. *Tetrahedron Lett.* **1984**, *25*, 219.
(6) Mandal, A. K.; Soni, N. R.; Ratnam, K. R. *Synthesis* **1985**, 274.
(7) Cloke, J. B.; Pilgrim, F. J. *J. Am. Chem. Soc.* **1939**, *61*, 2667.
(8) Harding, J. S.; Owen, L. N. *J. Chem. Soc.* **1954**, 1536.
(9) Borowitz, I. J.; Williams, G. J. *Tetrahedron Lett.* **1965**, 3813.
(10) Goldsmith, D. J.; Kennedy, E.; Campbell, R. G. *J. Org. Chem.* **1975**, *40*, 3571.
(11) Oku, A.; Harada, T.; Kita, K. *Tetrahedron Lett.* **1982**, *23*, 681.
(12) Karger, M. H.; Mazur, Y. *J. Org. Chem.* **1971**, *36*, 532.
(13) Pri-Bar, I.; Stille, J. K. *J. Org. Chem.* **1982**, *47*, 1215.
(14) Alper, H.; Huang, C. *J. Org. Chem.* **1973**, *38*, 64.
(15) Audin, P.; Doutheau, A.; Gore, J. *Bull. Soc. Chim. Fr.* **1984**, 297.

mm); IR (film) 3340 (OH) cm^{-1}; ^1H NMR ($CDCl_3$) δ 1.30 (d, 3 H, J = 6 Hz, CH_3CH), 1.4–2.3 (m, 4 H, CH_2CH_2), 3.45 (t, 2 H, J = 6 Hz, CH_2Br), 3.97 (m, 1 H, J = 6 Hz, HCOH) 7.80 (s, 1 H, HO).

Parallel reaction conditions employing tetrabutylammonium iodide (19.4 g, 52.5 mmol, Aldrich) as the halide source for 16 h afforded the 1-iodo-4-pentanol (**3**)[5] in 32% yield after chromatography (silica gel, eluted with ether). Standard treatment of this alcohol (16 h, 21 °C) with acetic anhydride (15 mL) and pyridine (3 mL) with a catalytic amount of 4-(dimethylamino)-pyridine (15 mg) afforded the acetate **4**: 3.26 g (80%); IR (film) 1735 (C=O) cm^{-1}; ^1H NMR ($CDCl_3$) δ 1.20 (d, 3 H, J = 6 Hz, CH_3CHOAc), 1.35–2.05 (m, 4 H, CH_2CH_2), 2.05 (s, 3 H, $CH_3C{=}O$), 3.21 (t, 2 H, J = 7 Hz, CH_2I), 4.85 (m, 1 H, HCOAc).

Reactioin of 2-methyltetrahydrofuran with anhydrous lithium bromide and boron trifluoride etherate in dichloromethane for 44 h gave **5** and **8** in approximately equal amounts on the basis of the integration of the methyl doublets at δ 1.29 and 1.40 in the ^1H NMR spectrum.

1-Acetoxy-4-bromopentane (9). Acetyl bromide (12.3 g, 100 mmol) in a pressure-equalizing dropping funnel was added dropwise over 20 min to a solution of 2-methyltetrahydrofuran (10.3 g, 120 mmol) containing zinc chloride (4 mg) maintained at 0 °C by an external ice bath. After addition was complete the ice bath was removed, the reaction stirred at 21 °C for 0.5 h and refluxed for 2.5 h. The reaction mixture was cooled, diluted with ether (130 mL), washed with 5% aqueous sodium bicarbonate solution, water, and brine, dried and the product purified by distillation to give **9**: 19.6 g (93%); bp 65–68 °C (2.5 mm) [lit.[12] bp 60 °C (0.01 mm)]; ^1H NMR ($CDCl_3$) δ 1.73 (d, 3 H, J = 6 Hz, CH_3CHBr), 1.7–1.9 (m, 4 H, CH_2CH_2), 2.00 (s, 3 H, $CH_3OC{=}O$), 4.01 (m, 3 H, CHBr, CH_2OAc). A weak doublet at δ 1.23 indicated the presence of ~10% of the positional isomer **6**.

Acknowledgment. We are grateful to Memorial University of Newfoundland and the Natural Sciences and Engineering Research Council of Canada for financial support of this research.

Registry No. 1, 96-47-9; 3, 90397-87-8; 4, 82131-06-4; 5, 62957-46-4; 6, 26923-93-3; 8, 16103-56-3; 9, 26923-92-2.

Alkylation of α-Formamido Ketone Enolate Anions. A Versatile Synthesis of α-Alkyl α-Amino Ketones[1]

Jack Ackrell and Joseph M. Muchowski*

Syntex Research, Institute of Organic Chemistry, Palo Alto, California 94304

Edvige Galeazzi and Angel Guzman

Syntex, S.A., División de Investigación, Lomas de Chapultepec, 11000 México, D.F.

Received March 5, 1986

α-Amino ketones are essential components of the Knorr pyrrole synthesis[2] and also have considerable value as intermediates for the synthesis of adrenergic ethanolamine derivatives.[3] Numerous methods of preparing these compounds are known[4] and new processes to provide access thereto continue to be devised.[5] This paper describes a versatile synthesis of these compounds, which has been used routinely in these laboratories for several years, based on the α-alkylation of the enolate anions of α-formamido ketones.

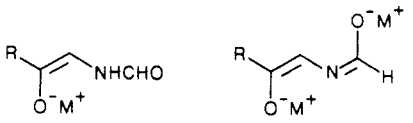

1 2

Garst et al.[6] have demonstrated that α-(*N*-alkyl-*N*-alkoxycarbonyl) ketones enolize predominantly toward the nitrogen atom[7] in the presence of various bases. This observation coupled with the facile hydrolysis of formamides under acidic conditions (e.g., see ref 8) suggested that α-formamido ketones might be useful building blocks for the construction of α-alkyl α-amino ketones. It was not obvious whether preferential carbon alkylation was more likely to take place on the mono (**1**) or dianionic (**2**) species, although it is clear that the inductive effect of the formamido group should enhance the acidity of the methylene hydrogens α thereto.[9] In any event, it was found that sequential reaction of α-formamidoacetophenone (**6**, R = Ph, Scheme I) with sodium hydride (1.07 equiv) and a primary alkyl halide (1.3 equiv) in dimethylformamide (DMF) at 0 °C gave the corresponding α-monoalkylated compounds **7** (R = Ph; R′ = Me, Et, *n*-Bu, $PhCH_2$) in 57–90% yields (Table I). Even 2-bromopropane gave the expected product in 30% yield, although in this case, an equivalent amount of the O-alkylated compound **9** (3:2 mixture of isomers) was also produced. The preferential mono-α-alkylation was not limited to formamidoacetophenone since the 3,4-methylenedioxy derivative (**6**, R = 3,4-$OCH_2OC_6H_3$) and 1-formamido-4-phenyl-2-butanone (**6**, R = $PhCH_2CH_2$) gave the anticipated compounds with methyl iodide, *n*-butyl bromide, and benzyl bromide. The latter substrate (**6**, R = $PhCH_2CH_2$) did, however, give rise to a greater proportion of other products (presumably because of competing alkylation at the α′-carbon atom and/or the nitrogen atom) and this is reflected in lower, but still useful, yields of the α-alkylated formamides.

The selective monoalkylation of α-formamido ketone enolates described herein is entirely analogous to that very recently reported by Hoye et al.[10] for benzamidoacetone (**10**, R = R′ = H) using strong bases such as lithium diisopropylamide (LDA), lithium bis(trimethylsilyl)amide, or potassium hydride in tetrahydrofuran solution (−78 to

Scheme I

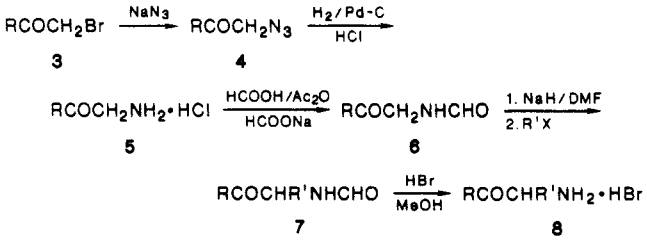

(1) Contribution no. 710 from the Syntex Institute of Organic Chemistry.

(2) (a) Gossauer, A. *Die Chemie der Pyrrole*; Springer-Verlag: New York, 1974; pp 210–220. (b) Jones, R. A.; Bean, G. P. *The Chemistry of Pyrroles*; Academic Press: London, 1977; pp 51–57.

(3) Tramontini, M. *Synthesis* **1982**, 605.

(4) Mayer, D. In *Houben-Weyl, Methoden der Organischen Chemie*, 4th ed.; G. Thieme: Stuttgart, 1977; Vol. 7/2C, p 2251.

(5) (a) Evans, D. A.; Sidebottom, P. J. *J. Chem. Soc., Chem. Commun.* **1978**, 753. (b) De Kimpe, N.; Verhe, R.; De Buyck, L.; Moens, L.; Sulmon, P.; Schamp, N. *Synthesis* **1982**, 765. (c) Locinro, S.; Pellacani, L.; Tardello, P. A. *Tetrahedron Lett.* **1983**, *24*, 593. (d) Pfaltz, A.; Anwar, S. *Ibid.* **1984**, *25*, 2977. (e) Ben-Ishai, D.; Denenmark, D. *Heterocycles* **1985**, *23*, 1353.

(6) Garst, M. E.; Bonfiglio, J. A.; Grudoski, D. A.; Marks, J. *J. Org. Chem.* **1980**, *45*, 2307.

(7) *N*-(Alkoxycarbonyl)-3-pyrrolidinones enolized preferentially away from the nitrogen atom.

(8) Guzman, A.; Muchowski, J. M.; Tun Naal, N. *J. Org. Chem.* **1981**, *46*, 1224.

(9) In dimethyl sulfoxide, the pK_a's of CH_3COCH_3 and CH_3CONH_2 are 26.5 and 25.5, respectively: Bordwell, F. G.; Algrim, D. J. *J. Org. Chem.* **1976**, *41*, 2507.

(10) Hoye, T. R.; Duff, S. R.; King, S. R. *Tetrahedron Lett.* **1985**, *26*, 3433.

0022-3263/86/1951-3374$01.50/0 © 1986 American Chemical Society