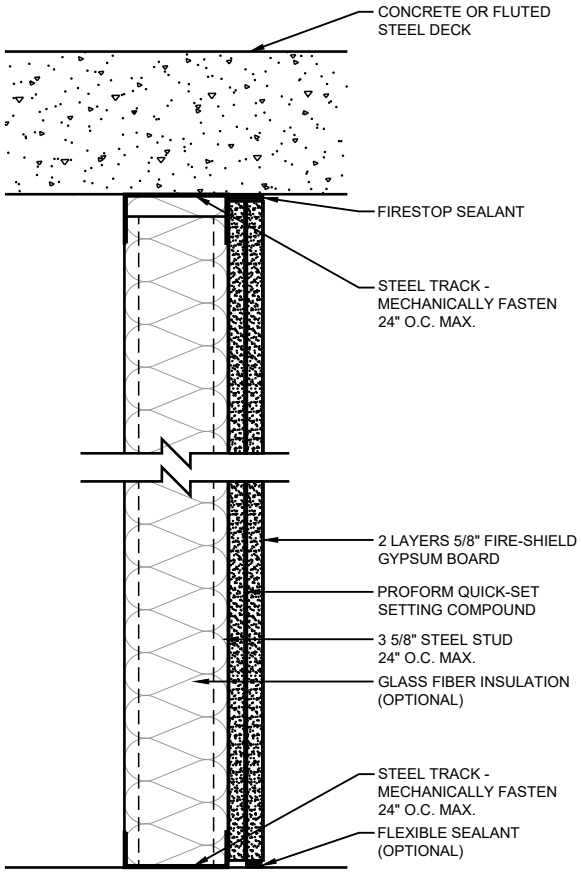

PARTITION - 1 HR
UL DESIGN: V497

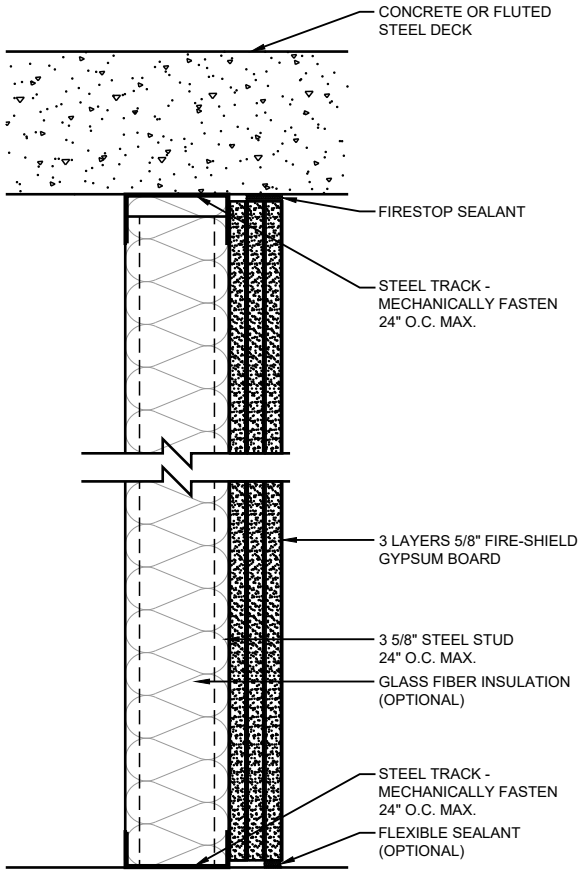

PARTITION - 1 HR
UL DESIGN: V497

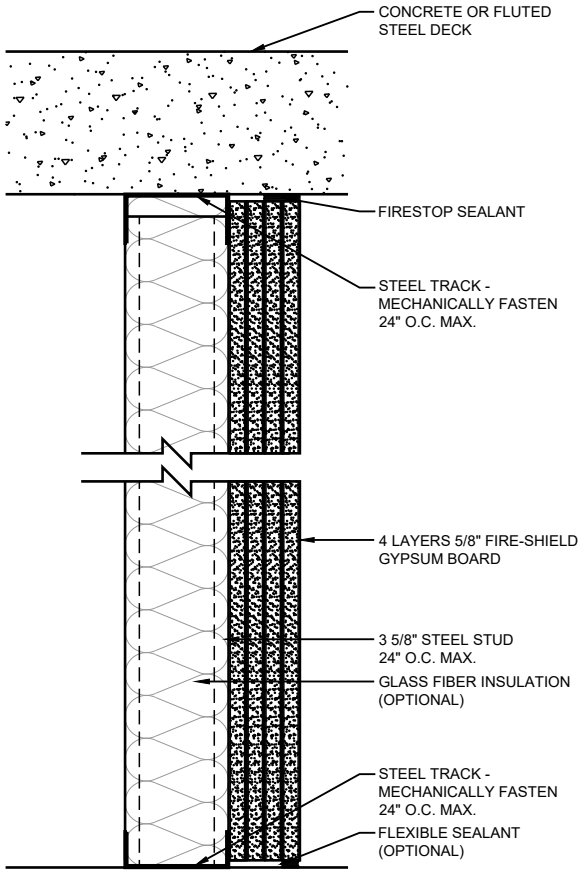

PARTITION - 2 HR
UL DESIGN: V497