3/27/2012 4:[illegible]4 PM

ILLiad TN#: 737648

Document Delivery Article Pull Slip

Hu, Changbing 1568423

rrs -

x QH541.15.M3 E27

JOURNAL TITLE: Ecological Modelling
JOURNAL ARTICLE AUTHOR:
JOURNAL ARTICLE TITLE: Slow Fast Limit-**Cycles in Predator Prey Models**
VOLUME: [illegible]
ISSUE:
MONTH:
YEAR: 1992
PAGES: 287-308

Please let us know if there is a problem with the reproduction accuracy or quality of this article. Email: ill@louisville.edu or call 852-6757

☐ Not On Shelf ☐ Not As Cited
☐ [illegible] ☐ Exceeds Copy Limits

Please briefly describe the problem and initial:

Please Initial Each Step:

Pull: _____

Scan: [illegible]

Date : 03/29/12

NOTICE/WARNING
CONCERNING COPYRIGHT RESTRICTIONS

UofLibraries

The copyright law of the United States (Title 17, United States Code) governs the making of photocopies or other reproductions of copyrighted material. Under certain conditions specified in the law, libraries and archives are authorized to furnish a photocopy or other reproduction. One of these specific conditions is that the photocopy or reproduction is not to be "used for any purpose other than private study, scholarship, or research." If a user makes a request for, or uses, a photocopy or reproduction for purposes in excess of "fair use," that user may be liable for copyright infringement. This institution reserves the right to refuse a copying order if, in its judgment, fulfillment of the order would involve violation of copyright law.

Ecological Modelling, 61 (1992) 287–308
Elsevier Science Publishers B.V., Amsterdam

Slow–fast limit cycles in predator–prey models *

S. Rinaldi [a] and S. Muratori [b]

[a] *CIRITA, Politecnico di Milano, Milano, Italy*
[b] *Centro Teoria dei Sistemi, CNR, Politecnico di Milano, Milano, Italy*

(Accepted 12 November 1991)

ABSTRACT

Rinaldi, S. and Muratori, S., 1992. Slow–fast limit cycles in predator–prey models. *Ecol. Modelling*, 61: 287–308.

This paper is devoted to the analysis of the cyclic behavior of predator–prey systems under the assumption that the time responses of prey and predator are quite diversified. In such a case, a geometric approach (separation principle) based on the singular perturbation method can be applied to detect slow–fast limit cycles. The main characteristic of these cycles is that the fast component of the ecosystem is present at significantly high densities only during a fraction of the cycle. At the start and at the end points of this period the slow component of the ecosystem reaches its minimum and maximum densities, which are related to each other through an integral equation. This equation is specialized for the classical predator–prey model and is later used to study the cyclic behavior of more complex predator–prey systems, some of which were not fully understood up to now. The conclusion of the analysis is that the existence of slow–fast limit cycles can be ascertained by means of the separation principle, while the geometry of the cycle can be fully specified only by using the integral equation discussed in this paper.

INTRODUCTION

An ecosystem is very often driven by periodically varying external forces (temperature during the day, tides, moon cycles, seasons, etc.). In such cases all populations which have a time response comparable to or smaller than the period of the driving function also vary periodically. The period of these forced limit cycles coincides with that of the forcing function or is a multiple of it, in which case the cycles are called subharmonics. On the

Correspondence to: S. Rinaldi, Centro Teoria dei Sistemi, CNR, Politecnico di Milano, Via Ponzio 34/5, 20133 Milano, Italy.
* This work was partly supported by Fondazione E. Mattei, Milano, Italy.

0304-3800/92/$05.00 © 1992 – Elsevier Science Publishers B.V. All rights reserved

contrary, unforced limit cycles are produced by the internal mechanisms of the ecosystem and are very often characterized by sudden and sometimes spectacular variations of the densities of some species. This is, for example, the case of forest ecosystems in which an insect pest is present for many years at very low density but periodically reproduces to very high numbers in a short time and completely defoliates the adult trees (Ludwig et al., 1978; Antonovsky et al., 1990), or the case of cyclic grazing systems in which the vegetation collapses and regenerates during each cycle (Noy-Meir, 1975). These sudden and very pronounced variations concern the fast component of the ecosystem which can be, for example, the bottom element of a food chain (such as phytoplankton–zooplankton–fish), the intermediate element (such as tree–insect pest–bird), or the top element (such as host–parasite–hyperparasite). For this reason, limit cycles of this type are usually referred to as slow–fast limit cyles.

The analysis of slow–fast limit cycles can be carried out by means of the singular perturbation method (Hoppensteadt, 1974: O'Malley, 1974; May, 1977) which is well suited for studying dynamical systems of the form

$$\epsilon \dot{x} = F(x, y) \tag{1a}$$

$$\dot{y} = G(x, y) \tag{1b}$$

where ϵ is a small positive parameter and x and y are finite dimensional vectors. Notice that when x and y are generic (i.e., when F is finite), $\| \dot{x} \|$ must be very large if ϵ is very small. Thus, the components of the vector x vary very quickly until $\| F \|$ becomes order ϵ. Under very general regularity assumptions on the function F and G, the singular perturbation method allows one to decompose the solution of system (1) into fast and slow motions. The fast motion is obtained by freezing the slow variable (namely y) at its initial value $y(0) = y_0$ and then solving the equation

$$\dot{x} = F(x, y_0) \tag{2}$$

with initial condition $x(0) = x_0$. In general, the solution of this equation tends toward a stable equilibrium $\bar{x}$ of the so-called fast system (2). Obviously, $F(\bar{x}, y_0) = 0$, so that $\bar{x}$ depends upon y_0 [actually $\bar{x}$ might depend also upon x_0 if (2) has multiple stable equilibria]. The slow motion of the system can be obtained by integrating the equation

$$\dot{y} = G[\phi(y), y] \tag{3}$$

where $x = \phi(y)$ is the stable equilibrium of the fast system when the slow variable is frozen at the value y {i.e., $F[\phi(y), y] \equiv 0$}. This means that the solution of (1) is composed of a very fast transient at constant y from (x_0, y_0) to $[\bar{x}(x_0), y_0]$, followed by a long transient during which both x and y vary slowly in accordance with (3) and $x = \phi(y)$.

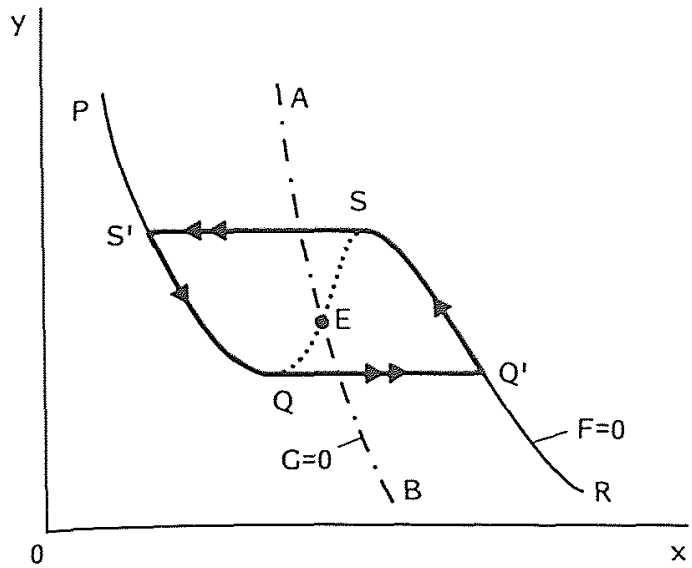

Fig. 1. A slow–fast limit cycle QQ′SS′ of a second-order system. Fast (slow) transients are identified by double (single) arrows. The isocline $G = 0$ of the slow variable (line AB) separates the stable branches of the isocline of the fast variables (segments PQ and RS). Point E is an unstable equilibrium in the region surrounded by the limit cycle.

The method can be easily applied to second-order systems to prove the existence of limit cycles composed of alternate slow and fast transitions. A simple hypothetical case is illustrated in Fig. 1 where the line PQSR is the isocline $\dot{x} = 0$ (i.e., $F = 0$) and the line AB is the isocline $\dot{y} = 0$ (i.e., $G = 0$). The segments PQ and RS of the first isocline are the stable branches of the equilibrium manifold of the fast system ($\partial F/\partial x < 0$ on PQ and RS), while segment QS is composed of the unstable equilibria of the fast system (2). Thus, if ϵ is very small in (1a) and $\dot{y} < 0$ on segment PQ, the state of the system slowly varies along the first isocline from point P to point Q (more precisely, the trajectory develops in an ϵ-tube along line PQ). But at point Q, $F = 0$ and $\dot{y} < 0$, so that after some time F is not order ϵ anymore. The consequence is that after a while a very fast transient takes place at constant y and the system goes from the neighborhood of point Q to the neighborhood of point Q′ on the stable manifold RS. Then, if $\dot{y} > 0$ on that manifold, a slow motion develops from Q′ to S where a second fast transient takes place and brings the system back to point S′, thus closing the cycle. All this can be summarized by saying that a slow–fast limit cycle exists if the slow isocline $G = 0$ separates (as it does in Fig. 1) the two stable branches of the fast isocline $F = 0$. Of course, the slow–fast limit cycle does not coincide with the closed line QQ′SS′, but is contained in an ϵ-tube around that line.

This method of analysis, used for a long time in the context of relaxation oscillations (see, for example, Guckenheimer and Holmes, 1983), has been

recently extended by the authors to the case of third-order systems (Muratori and Rinaldi, 1991) and applied to a number of interesting ecological models. The method, called the separation principle, works also for systems with three levels of dynamics (i.e., slow, intermediate and fast dynamics) and has been used to detect limit cycles in food chain systems (Muratori, 1991; Muratori and Rinaldi, 1992) and in forest ecosystems (Rinaldi and Muratori, 1992), while an early version of the approach has been applied to competition systems (Muratori and Rinaldi, 1989a).

The study of slow–fast limit cycles in ecology and population dynamics is of particular interest because in the majority of cases one of the two stable branches of the fast equilibrium manifold is the trivial manifold (a prey population x tends asymptotically to zero if the predator population is sufficiently high and is kept constant [see (2)]). This implies that the trivial manifold is the end point of one of the two fast transitions and the start point of the other. Therefore, for a long time during each cycle the fastest component of the ecosystem is present only at extremely low densities. As shown in the next section, the consequence of this property is that the determination of the limit cycle is not as simple as in Fig. 1, even in the case of second-order systems. In principle, a rigorous analysis of the cycle in dynamical systems with trivial stable manifolds would require the use of the so-called non-standard analysis (Zvonkin and Shubin, 1984). Some general but very abstract results along this line can be found in Diener and Diener (1983), while a standard but somehow non-rigorous analysis of the problem has been presented by Haberman (1979) and later revised by Schecter (1985).

In this paper we first present a very simple derivation of the main property of slow–fast limit cycles. The proof follows an idea pointed out by Osipov and co-workers (1986) in an unpublished note in which they analyze a quite unusual predator–prey system with competing predators. Then, we use this property to analyze the classical second-order predator–prey model (May, 1972; Shimazu et al., 1972) composed of a prey with logistic growth and a predator with Holling's-type functional response (Holling, 1965). In particular, we show that the maximum and minimum values attained by the predator population during the cycle can be easily determined from the numerical values of the prey and predator parameters. Finally, we briefly discuss the consequences of our results on the geometry of the limit cycles that can be present in food chain systems and forest ecosystems and we revise our theory of competitive coexistence (Muratori and Rinaldi, 1989a), where the problem of slow–fast cycles of predator–prey systems was not yet fully understood.

A RELATIONSHIP BETWEEN MINIMUM AND MAXIMUM PREDATOR DENSITIES

Let us consider a second-order predator–prey system of very general form, namely

$$\epsilon \dot{x} = xf(x, y) \tag{4a}$$

$$\dot{y} = yg(x, y) \tag{4b}$$

where f and g are differentiable functions and ϵ is a small positive parameter. For simplicity, we call x prey and y predator because frequently the prey population has a fast dynamics in comparison with the predator population. Figure 2 shows the typical shape of these isoclines in the case where the positive equilibrium E is unstable so that all trajectories starting from an interior point of the positive quadrant asymptotically tend to a limit cycle [the formal proof of the existence and uniqueness of this limit cycle is very difficult and has actually been given for particular classes of predator–prey models, see Cheng (1981) and Kuang and Freedman (1988)].

The isoclines shown in Fig. 2 correspond to a prey with logistic growth (K is the carrying capacity) and to a predator with saturating functional response and density-dependent mortality (see next section for further details). The stable branches of the fast isocline $\dot{x} = 0$ are KD and PQ,

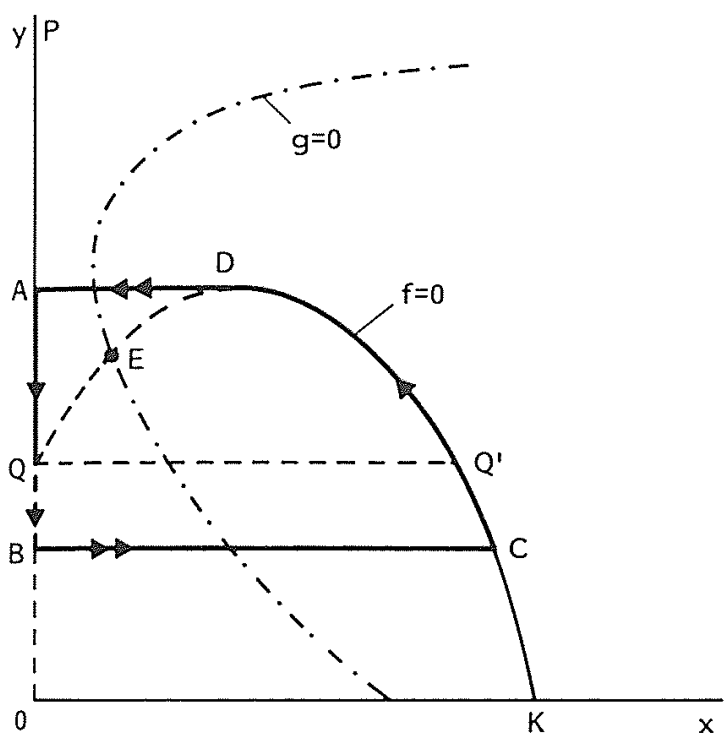

Fig. 2. Typical isoclines of a predator–prey system (4) and corresponding slow–fast limit cycle ABCD.

while the segments DQ and OQ are the unstable branches. By analogy with the case analyzed in Fig. 1, one would expect (Muratori and Rinaldi, 1989a) that the slow–fast limit cycle is AQQ′D where the maximum and minimum values of the predator population are determined by the bifurcation points D and Q. Nevertheless, this is not true, since the minimum value of the predator population is actually lower, as shown in Fig. 2 where the slow–fast limit cycle is ABCD. This means that when the prey is almost absent, the predator population decreases from its maximum value y_{max} to a value y_{min} which is lower than the value y_Q at which the fast system loses stability. This somehow counterintuitive fact can be justified by noticing that in an ϵ-neighbourhood of point Q, both x and f are order ϵ so that $\dot{x}$ is also order ϵ since $\epsilon\dot{x} = xf$. Thus, at a point with $x > 0$ close to point Q, $\dot{x}$ is very small in comparison with $\dot{y}$, so that $\mathrm{d}y/\mathrm{d}x = \dot{y}/\dot{x}$ is very large, i.e. the trajectory passing close to point Q is almost vertical. As shown in the following, the slow–fast limit cycle develops almost vertically along the y axis from the vicinity of point A to the vicinity of a point B, which is such that the increment of x along segment QB compensates the decrement of x along AQ.

The relationship between the minimum (y_{min}) and the maximum (y_{max}) values of the predator population along the limit cycle can be established as follows. Consider system (4) and fix the initial value x_0 of the prey population at ϵ, and the initial value y_0 of the predator population at a value greater than y_0, i.e.,

$$(x_0, y_0) = (\epsilon, y_0) \quad y_0 > y_Q$$

Thus, $\dot{x}(0) < 0$ and $\dot{y}(0) < 0$, and the trajectory passing through point $\alpha = (\epsilon, y_0)$ is like in Fig. 3. Let us indicate by T the time at which $x(T) = \epsilon$ so that point β in Fig. 3 has coordinates $\beta = [\epsilon, y(T)]$. From equation (4a) it follows that

$$\frac{\epsilon}{x}\mathrm{d}x = f(x, y)\,\mathrm{d}t$$

while from equation (4b) we have

$$\mathrm{d}t = \frac{1}{yg(x, y)}\mathrm{d}y$$

so that, by substitution, we obtain

$$\frac{\epsilon}{x}\mathrm{d}x = \frac{f(x, y)}{yg(x, y)}\mathrm{d}y$$

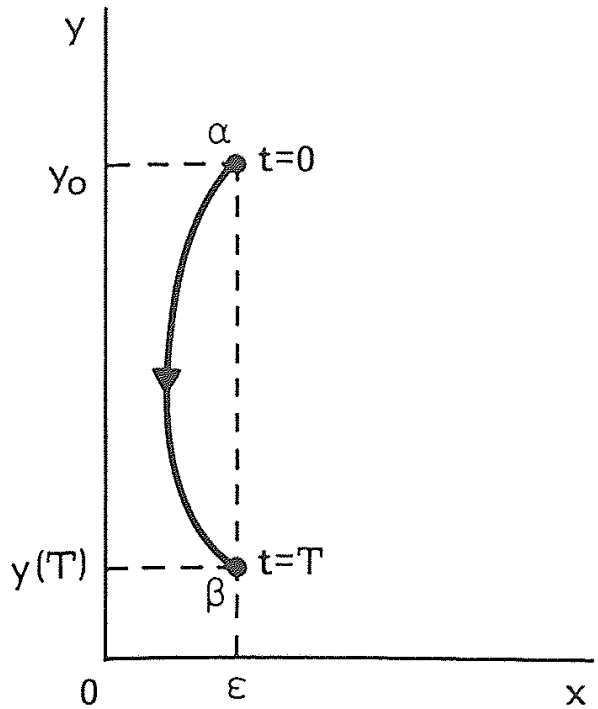

Fig. 3. The trajectory from α to β along which equation (4) is integrated.

By integrating this equation from α to β we get

$$\int_{x_\alpha}^{x_\beta} \frac{\epsilon}{x} \mathrm{d}x = \int_{y_\alpha}^{y_\beta} \frac{f(x, y)}{yg(x, y)} \mathrm{d}y$$

where the left-hand side is equal to zero since $x_\alpha = x_\beta$. Thus, for ϵ going to zero we have

$$\int_{y_\alpha}^{y_\beta} \frac{f(0, y)}{yg(0, y)} \mathrm{d}y = 0 \tag{5}$$

If we apply this integral equation to the slow transition AB of the slow–fast limit cycle shown in Fig. 2 we must substitute y_α by the maximum value $y_{\max}$ of the predator population and y_β by $y_{\min}$, thus obtaining

$$\int_{y_{\min}}^{y_{\max}} \frac{f(0, y)}{yg(0, y)} \mathrm{d}y = 0 \tag{6}$$

Equation (6) can be used to derive $y_{\min}$ from $y_{\max}$, as shown in the next section for the classical predator–prey model. Since y, f, and g do not change sign on segment AQ of Fig. 2, it follows from (6) that $y_{\min} < y_Q$, as already pointed out. This definitely proves that slow–fast limit cycles of predator–prey systems have the following very peculiar property: when the prey is practically absent the predator population decreases past the threshold value (point Q in Fig. 2) at which the prey population becomes unstable.

Obviously, all we have said in this section about prey and predator holds for predator and prey in the case when the fast component is the predator. In other words, the integral equation (6) indicates that minimum and maximum densities reached during the cycle by the slow component of the ecosystem are not independent.

THE CLASSICAL PREY–PREDATOR MODEL

Let us now consider the predator–prey model introduced almost 20 years ago by May (1972) and Shimazu et al. (1972). In such a model the prey is logistic and the predator has a saturating functional response, i.e.

$$\dot{x} = x\left[r^*\left(1 - \frac{x}{K}\right) - \frac{a^* y}{b + x}\right]$$

$$\dot{y} = y\left[e^* \frac{a^* x}{b + x} - d\right]$$

where r^* and K are the growth rate per capita and the carrying capacity of the prey, a^* is the maximum harvest rate of the predator, b is the half-saturation constant, namely the prey population at which the harvest rate of the predator is half maximal, e^* is the number of newly born predator for each unit of harvested prey, and d is the death rate of the predator. Three of the six parameters have been identified with an asterisk because we need special assumptions on them in order to have a slow–fast predator–prey model of the form (4). In fact, the prey has a fast dynamics if its growth rate r^* is high and the predator is quite aggressive, i.e. a^* is high, while the predator has, in comparison, a slow dynamics if its efficiency e^* is low. Mathematically speaking this corresponds to

$$r^* = r\epsilon \quad a^* = a\epsilon \quad e^* = e/\epsilon$$

where ϵ is a small positive parameter. Thus, the predator–prey model becomes

$$\epsilon\dot{x} = x\left[r\left(1 - \frac{x}{K}\right) - \frac{ay}{b + x}\right] \tag{7a}$$

$$\dot{y} = y\left[\frac{cx}{b + x} - d\right] \tag{7b}$$

where $c = e^* a^* = ea$.

Since model (7) is a particular case of (4) we can apply it to equation (6), which becomes

$$\int_{y_{\min}}^{y_{\max}} \left(\frac{r}{y} - \frac{a}{b}\right) \mathrm{d}y = r \log\frac{y_{\max}}{y_{\min}} - \frac{a}{b}(y_{\max} - y_{\min}) = 0 \tag{8}$$

In equation (8), $y_{\max}$ is the maximum value of y along the slow–fast limit cycle in the limit case $\epsilon \to 0$. Thus, $y_{\max}$ is the maximum of the parabola

$$y = \frac{r}{a}\left(1 - \frac{x}{K}\right)(b + x)$$

obtained by annihilating equation (7a). Hence,

$$y_{\max} = \frac{r}{a}\frac{(K+b)^2}{4K} \tag{9}$$

Substituting (9) into (8) we obtain a transcendental equation for $y_{\min}$, which can be solved numerically. Equation (8) shows that $y_{\min}$ depends only upon four basic parameters of the model, namely (a, b, r, K). Actually, $y_{\min}$ depends upon $y_{\max}$ [see (9)] and

$$y_0 = \frac{br}{a} \tag{10}$$

since equation (8) can be written as

$$\frac{y_{\min}}{y_Q} - \log\frac{y_{\min}}{y_Q} = \frac{y_{\max}}{y_Q} - \log\frac{y_{\max}}{y_Q} \tag{11}$$

if (10) is taken into account. The geometric interpretation of equation (11) justifies the graphical procedure illustrated in Fig. 4 for the computation of $y_{\min}$. Such a procedure is simply based on the graph of the function $\log z$.

If the predator–prey model is different from (7), equation (11) does not give, in general, the exact value of $y_{\min}$. Nevertheless, it can give useful information, as shown by the following example. Assume that the predator is harvested by a superpredator z characterized by a functional response of the Holling's type and that the superpredator population is constant. Thus, the model is (see Muratori and Rinaldi, 1989b, for a detailed analysis of its bifurcations)

$$\epsilon\dot{x} = x\left[r\left(1 - \frac{x}{K}\right) - \frac{a_1 y}{b_1 + x}\right] = xf(x, y) \tag{12a}$$

$$\dot{y} = y\left[\frac{cx}{b_1 + x} - d - \frac{a_2 z}{b_2 + y}\right] = yg(x, y, z) \tag{12b}$$

and equation (6) can be applied to it for computing $y_{\min}(z)$ for any given value of z (notice that $y_{\max}$ and y_0 do not depend upon z). Of course, $y_{\min}(0)$ satisfies equation (11) because for $z = 0$ the model becomes the classical model (7). If, on the contrary, $z > 0$, equation (6) becomes

$$\int_{y_{\min}(z)}^{y_{\max}} \frac{f(0, y)}{yg(0, y, z)}\,\mathrm{d}y = 0 \tag{13}$$

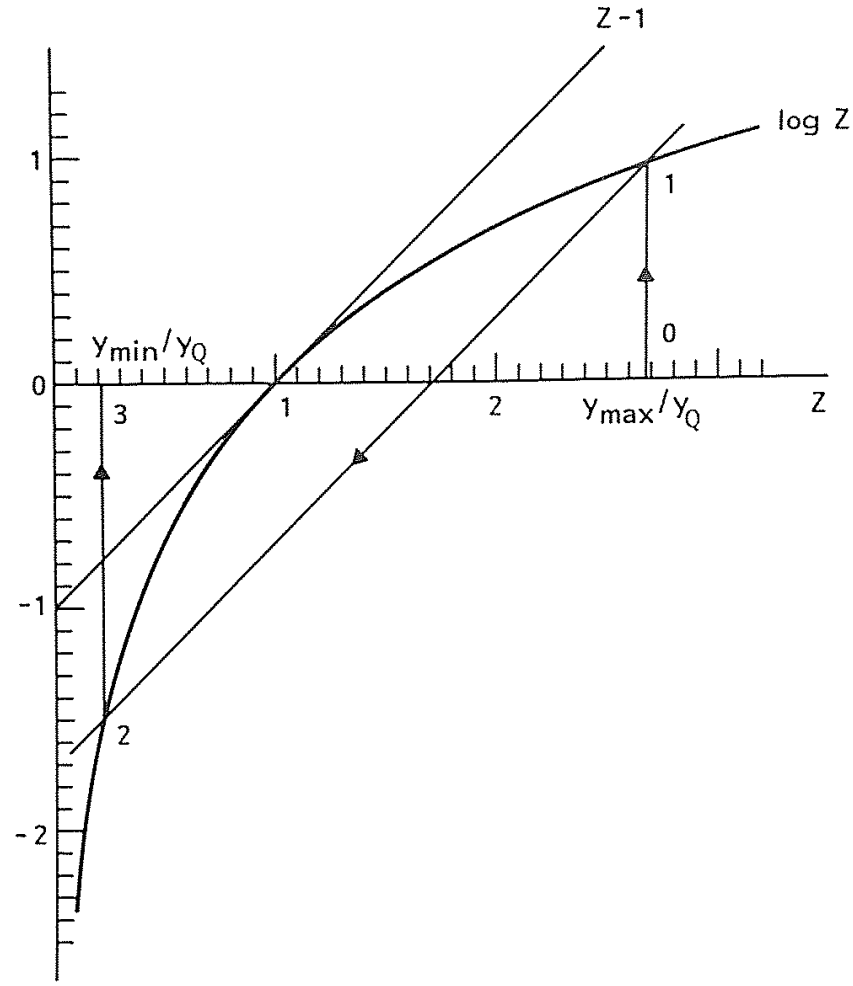

Fig. 4. The function log z and the graphical procedure ($0 \to 1 \to 2 \to 3$) for computing $y_{\min}$.

By substituting (12) into (13) one obtains

$$\int_{y_{\min}(z)}^{y_{\max}} \left(\frac{r}{y} - \frac{a_1}{b_1} \right) \frac{y + b_2}{y + b_2 + a_2 z/d} \, \mathrm{d}y = 0 \tag{14}$$

from which a transcendental equation for $y_{\min}(z)$ can be easily derived by integration. Obviously, [see (8)] such an equation degenerates into (11) for $z = 0$. As shown in the Appendix, $y_{\min}(z)$ is a decreasing function of z, i.e.

$$y_{\min}(z) < y_{\min}(0)$$

where $y_{\min}(0)$ can be computed by means of (11).

MORE COMPLEX PREY–PREDATOR SYSTEMS

This section is devoted to the analysis of three-dimensional predator–prey systems with highly differentiated dynamics. We first discuss the cyclic behavior of food chain systems assuming that the time responses of the three components of the food chain are quite diversified. Then, we illustrate the kind of limit cycles that can be produced in a forest ecosystem by

an insect pest feeding on the foliage of adult trees when the time response of young trees is shorter than that of old trees but longer than that of the insect pest. Finally, we show why two predators competing exploitatively for the same prey can coexist if the prey has fast dynamics. The literature concerning these problems is very extensive and the analysis is rather heavy from a mathematical point of view. For this reason we will not enter into the details of the discussion, for which the reader can refer to the specific references mentioned in the text. However, we will illustrate, by means of simple three-dimensional figures, the geometry of slow–fast limit cycles and we will place stress on the properties we have discussed in this paper, namely the existence of long periods of absence of the fast component of the ecosystem and the relationship between minimum and maximum densities of the slow component.

Food chain systems

Models of food chain systems are numerous and quite diversified, but the standard model is the natural extension of the predator–prey model considered in the preceding section: the bottom component of the food chain is a logistic prey, while predator and superpredator are characterized by a saturating functional response of the Holling's type.

Most of the literature on food chains deals with the problem of persistence in all its versions. Weak persistence (i.e., lim sup > 0 for all populations) is discussed in Freedman and Waltman (1977), Gard and Hallam (1979), and Gard (1980, 1981), strong persistence (i.e., lim inf > 0 for all populations) in Freedman and Waltman (1984, 1985), and El-Owaidy and Ammar (1986), and uniform persistence (i.e., lim inf $> \alpha > 0$ for all populations) in Freeman and So (1985) and Gard (1987). Since the top predator of a food chain becomes extinct if one of the other populations does so, persistence has to do only with the behavior of the system for small values of the superpredator population. For this reason persistence does not give information on either the number and structure of the attractors (equilibria, cycles, strange attractors) in the positive octant, or on the transients bringing the state of the system toward the attractor. This is a very unfortunate situation, because the type of transients and the nature of the attractors are, after all, the most interesting properties of a dynamical system.

Nevertheless, the authors have recently shown (Muratori and Rinaldi, 1992) that the dynamic behavior of food chains can be thoroughly understood when the trophic levels are characterized by highly differentiated dynamics. In the majority of food chains (e.g., plant–herbivore–carnivore) the size and the time needed for reproduction and growth of the individu-

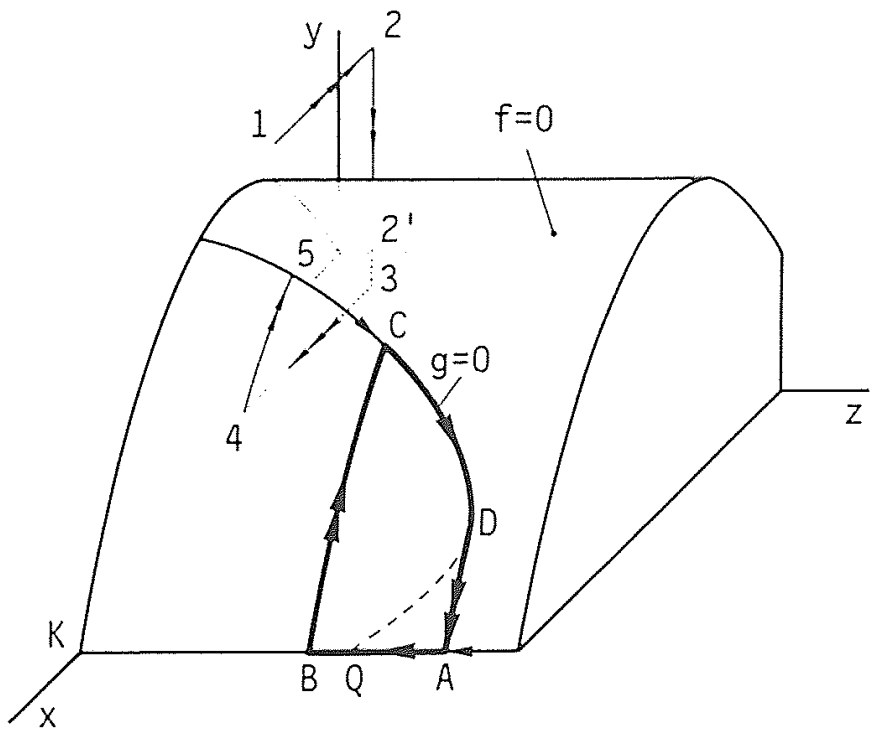

Fig. 5. Trajectories and slow–fast limit cycle ABCD of the food chain system (15) for suitable values of the parameters. Segments of trajectories with one, two, and three arrows develop at low, intermediate, and high speed, respectively.

als of each population increase with the trophic level. Thus, using two small dimensionless positive parameters ϵ and δ and rescaling the parameters as in the previous section, one obtains the following food chain model

$$\epsilon\delta\dot{x} = xf(x, y) = x\left[r\left(1 - \frac{x}{K}\right) - \frac{a_1 y}{b_1 + x}\right] \tag{15a}$$

$$\delta\dot{y} = yg(x, y, z) = y\left[\frac{c_1 x}{b_1 + x} - d_1 - \frac{a_2 z}{b_2 + y}\right] \tag{15b}$$

$$\dot{z} = zh(y) = z\left[\frac{c_2 y}{b_2 + y} - d_2\right] \tag{15c}$$

where x, y, and z stand for prey, predator, and superpredator populations and the 10 parameters r, K, a_i, b_i, c_i, d_i, $i = 1, 2$, are positive. In such a model we have three levels of dynamics: the prey is fast and the superpredator is slow, while the predator population varies at intermediate speed. Using the singular perturbation method, the transients and the limit cycles can therefore be decomposed into fast, intermediate and slow transitions as shown in Fig. 5 for a particular set of parameters. Starting from point 1, a high speed trajectory develops at constant y and z toward

point 2 on the trivial fast manifold $x=0$. From that point a trajectory develops at intermediate speed in accordance with the equations

$$\epsilon\delta\dot{x}=xf(x,\ y) \tag{16a}$$

$$\delta\dot{y}=yg(x,\ y,\ \bar{z}) \tag{16b}$$

with $\bar{z}$ constant. Rescaling the time, equations (16) become equivalent to (4), so that equation (5) can be applied to obtain the y coordinate of point 3 where the fast component becomes active again. Thus, as shown in Fig. 5, a part (segment 2′3) of the transition characterized by very low densities of the prey develops along an unstable manifold. The fast transition starting from point 3 ends at point 4 on the stable manifold $f=0$ and is followed by an intermediate speed transition on the manifold $f=0$ which ends at point 5 on the stable branch of the manifold $g=0$. At that point a slow motion takes place along the non-trivial manifold $f=g=0$ until point D is reached. At this point, y loses stability and the predator population collapses to zero at intermediate speed while the prey population asymptotically approaches its carrying capacity K at the same speed (point A in Fig. 5). At that point the food chain is disconnected ($y=0$) so that the superpredator population decreases while the prey remains at its carrying capacity. Again, this phase of the transient can be studied by analyzing the second-order system (15b,c)

$$\delta\dot{y}=yg[\psi(y),\ y,\ z]$$

$$\dot{z}=zh(y)$$

where $x=\psi(y)$ is the fast manifold $f=0$, i.e. $f[\psi(y),\ y]\equiv 0$. The application of equation (5) to this second-order system gives [notice that h does not depend on z and $\psi(0)=K$]

$$\int_{z_A}^{z_B}\frac{g(K,\ 0,\ z)}{z}\,\mathrm{d}z=0$$

from which the value of z_B can be derived. Finally, from point B a transition develops at intermediate speed and brings the state of the system back to point C, thus closing the cycle ABCD.

In conclusion, the analysis of the geometry of the different manifolds, as depicted in Fig. 5, shows that the state of the system tends toward a stable limit cycle. Moreover, for a long fraction of the transient the prey is present in very low numbers (transition 23), while on the cycle the predator periodically collapses (transition DA) and regenerates (transmission BC). Finally, in accordance with our previous analysis, the low density of one of the populations implies that the trajectory evolves along unstable manifolds (segments 2′3 and QB in Fig. 5).

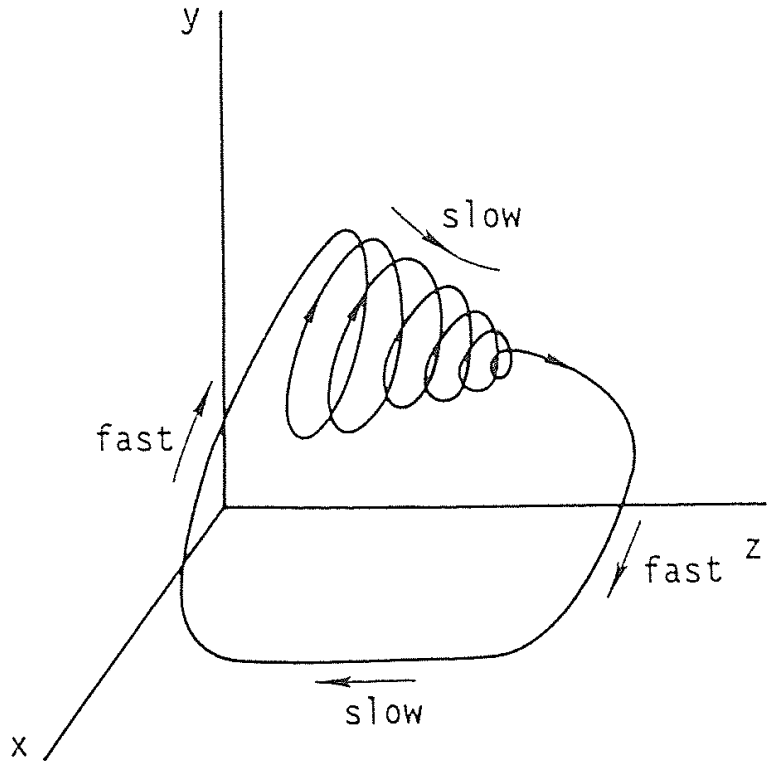

Fig. 6. A low frequency limit cycle of the food chain system (15) with a burst of high frequency prey (x)–predator (y) oscillations.

Of course, other types of behavior are also possible. In particular, for suitable values of the parameters (see Muratori and Rinaldi, 1992) the food chain can have a stable equilibrium point as unique attractor, while for other values of the parameters high frequency oscillations involving fast transitions (prey dynamics) can also be present. More precisely, such high frequency oscillations can occur at the beginning of the transient and then disappear, or they can periodically appear during a fraction of a low frequency limit cycle as shown in Fig. 6 for small but finite values of ϵ and δ. This is obviously the most interesting case, in which the dynamics of the fastest component of the system (namely the prey) is not completely filtered out and is periodically revealed by a burst of high frequency predator–prey oscillations.

Forest–pest interactions

We now consider the most natural extension of the classical predator–prey model to the case of age-structured prey. These models have been used (see Ludwig et al., 1978; Antonovski et al., 1990; Rinaldi and Muratori, 1992) to discuss the existence of limit cycles in age-structured forest ecosystems, such as the balsam fir forest of eastern North America which has experienced periodic outbreaks of spruce budworms. For this reason,

we refer to this case and we denote with x the defoliator and with y and z the young and adult trees, respectively. Assuming that the defoliator and the adult trees are the fast and slow components of the ecosystem and that the defoliator feeds only on adult trees (as it usually does), the model is

$$\epsilon\delta\dot{x} = x\left(-a_1 - a_2 x - \frac{a_3}{a_4 + x} + \frac{a_5 z}{a_6 + z}\right) = F(x, z) \tag{17a}$$

$$\delta\dot{y} = a_7 z - \left(a_8\delta + a_9(z - a_{10})^2 + a_{11}\right)y = G(\delta, y, z) \tag{17b}$$

$$\dot{z} = a_8 y - \left(a_{12} + \frac{a_{13}x}{a_6 + z}\right)z = H(x, y, z) \tag{17c}$$

where the 13 parameters $a_1, \ldots, a_{13}$ are positive. The first equation says that the defoliator has a density-dependent mortality due to intraspecific competition and predation (birds in the case of the spruce budworm) and a natality rate proportional to the number of adult trees defoliated per unit of time. The second equation says that young trees become adult at a rate a_8, and that their birth rate is proportional to the number of adult trees, while their basic death rate is minimum (i.e., equal to a_{11}) for a particular density ($z = a_{10}$) of the adult trees. Finally, the third equation says that the mortality rate of adult trees is the sum of a constant term and a density-dependent term due to the functional response of the insect pest.

Model (17) is not exactly of the form (4) because G and H in (17b,c) cannot be written as yg and zh, and because G depends upon the small parameter δ. Nevertheless, it can be shown that the same kind of analysis (in particular, the separation principle) can be applied to (17) for detecting limit cycles provided δ is put equal to zero in G. A typical result of the analysis is shown in Fig. 7 where the fast manifold $F(x, z) = 0$ (parallel to the y axis) and the intermediate manifold $G(0, y, z) = 0$ (parallel to the x axis) are the support for constructing the transient trajectory 123C and the cycle ABCD. One should notice the resemblance to Fig. 2: the limit cycle is composed of alternate fast and slow transitions, the fast component (the budworm) is practically absent for a large portion of the cycle (segment AB), and one of the two slow transitions partly evolves along an unstable manifold (segment QB). The determination of point B, given point A, can be carried out by applying equation (5) to the second-order system (x, z) described by (17a,c) with the constraint $G(0, y, z) = 0$ taken into account. In fact, $G(0, y, z) = 0$ implies [see equation (17b)]

$$y = \frac{a_7 z}{a_9(z - a_{10})^2 + a_{11}}$$

which substituted into (17c) gives rise to an equation of the form $\dot{z} =$

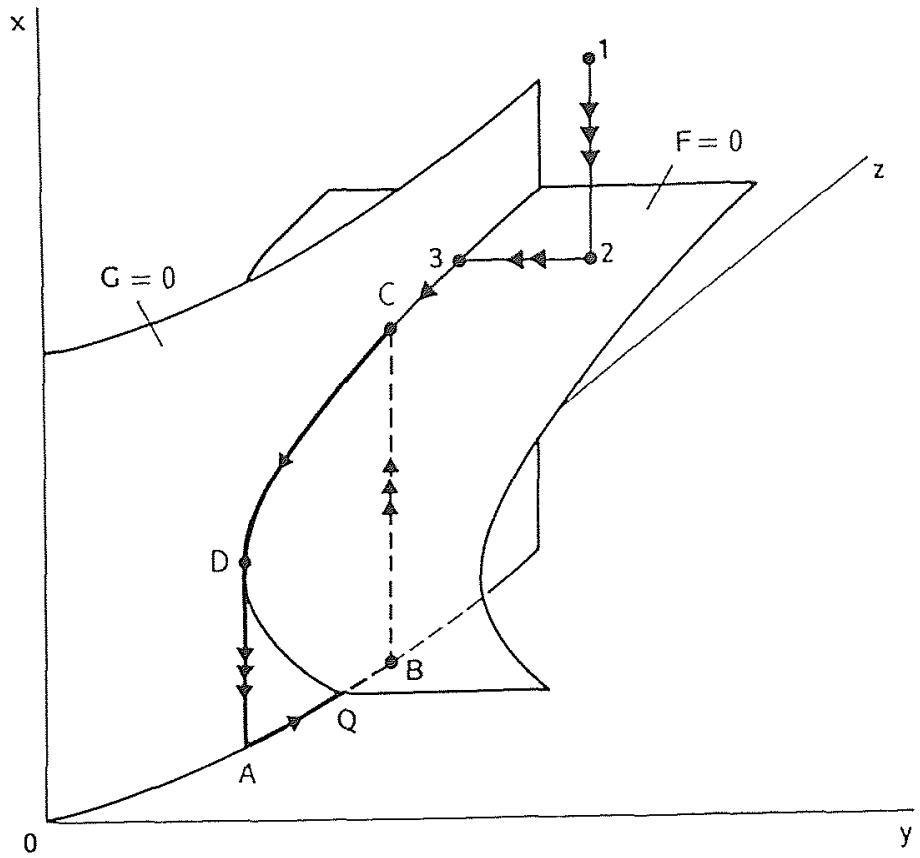

Fig. 7. A slow–fast limit cycle ABCD of the forst-pest model (17). Segments of trajectories with one, two, and three arrows develop at low, intermediate, and high speed, respectively.

$zh(x, z)$, as required by our analysis [see (4b)]. The result illustrated in Fig. 7 fits perfectly with the observations on balsam fir forests. When insect pests are almost absent in the forest, old and young trees grow slowly for a long period until they reach a biomass at which the mechanisms that keep the pest under control are overcome. Thus, in a very short time, we have an insect outbreak, followed by a second long period during which the tree biomass slowly decays. As a consequence, the pest population also decreases smoothly until it reaches a density at which its mortality mechanisms destabilise it. Then, the pest population very quickly collapses to zero.

Competitive coexistence

The theory of competition is rooted in a monograph by Volterra who showed in 1927 that the coexistence of two ore more predator species limited by the same resource (prey) is impossible (competitive exclusion principle). Numerous exceptions to the principle have been found by allowing spatial heterogeneity and seasonality or by considering ecosystems with three trophic levels. Definitely more interesting, both biologically and

mathematically, are the exceptions due only to the renewability of the resource and to the limited ability of the predators to handle their prey. Koch (1974) was the first to show, by means of computer simulation, that coexistence of two predators competing exploitatively for a renewable resource in a constant and uniform environment was possible. This coexistence occurred along what appeared to be a periodic orbit in the positive octant of a three-dimensional dynamical system. The result was later confirmed by other numerical experiments (McGehee and Armstrong, 1977; Hsu et al., 1978b) and by some theoretical contributions (McGehee and Armstrong, 1977; Butler and Waltman, 1981; Smith, 1981; Keener, 1983; Farkas, 1984). Unfortunately, none of these studies reports explicitly the range of the prey and predator parameters for which coexistence is guaranteed. However, this turns out to be possible, as shown by the authors (Muratori and Rinaldi, 1989a), when the reference model used in this context (see Hsu et al., 1978a, for a rigorous analysis of its structural properties) is specialized to the case in which the two predators (y_1 and y_2) have a slower dynamics than the prey (x), a property which holds, at least to a certain extent, in most competitive systems (e.g., bacteria and protozoa, ant and birds, grass and ungulates, krill and whales). Under this assumption, the model is

$$\epsilon\dot{x} = x\left[r\left(1-\frac{x}{K}\right) - \frac{a_1 y_1}{b_1+x} - \frac{a_2 y_2}{b_2+x}\right] = xf(x, y_1, y_2) \tag{18a}$$

$$\dot{y}_1 = y_1\left[\frac{c_1 x}{b_1+x} - d_1\right] = y_1 h_1(x) \tag{18b}$$

$$\dot{y}_2 = y_2\left[\frac{c_2 x}{b_2+x} - d_2\right] = y_2 h_2(x) \tag{18c}$$

where the 10 parameters r, K, a_i, b_i, c_i, d_i, $i = 1, 2$, are positive and ϵ is a small positive scaling factor. Notice that (18) is the most natural extension of the classical predator–prey system (7) to the case of competition systems.

The fast system [equation (18a) with frozen values of y_1 and y_2] has a trivial equilibrium manifold $x = 0$ and a non-trivial equilibrium manifold $f = 0$ which, for suitable values of the parameters, is a fold surface as shown in Fig. 8. The stable fast manifolds are the upper part of the surface $f = 0$ and the plane (y_1, y_2) above the line $f(0, y_1, y_2) = 0$ (line RS in Fig. 8). Thus, starting from a generic initial condition, such as point 1 in Fig. 8, we have a first fast transition toward point 2 on the stable fast manifold, followed by a slow transition along the manifold. The two predator populations increase along path 23 if their death rate is sufficiently small, but at

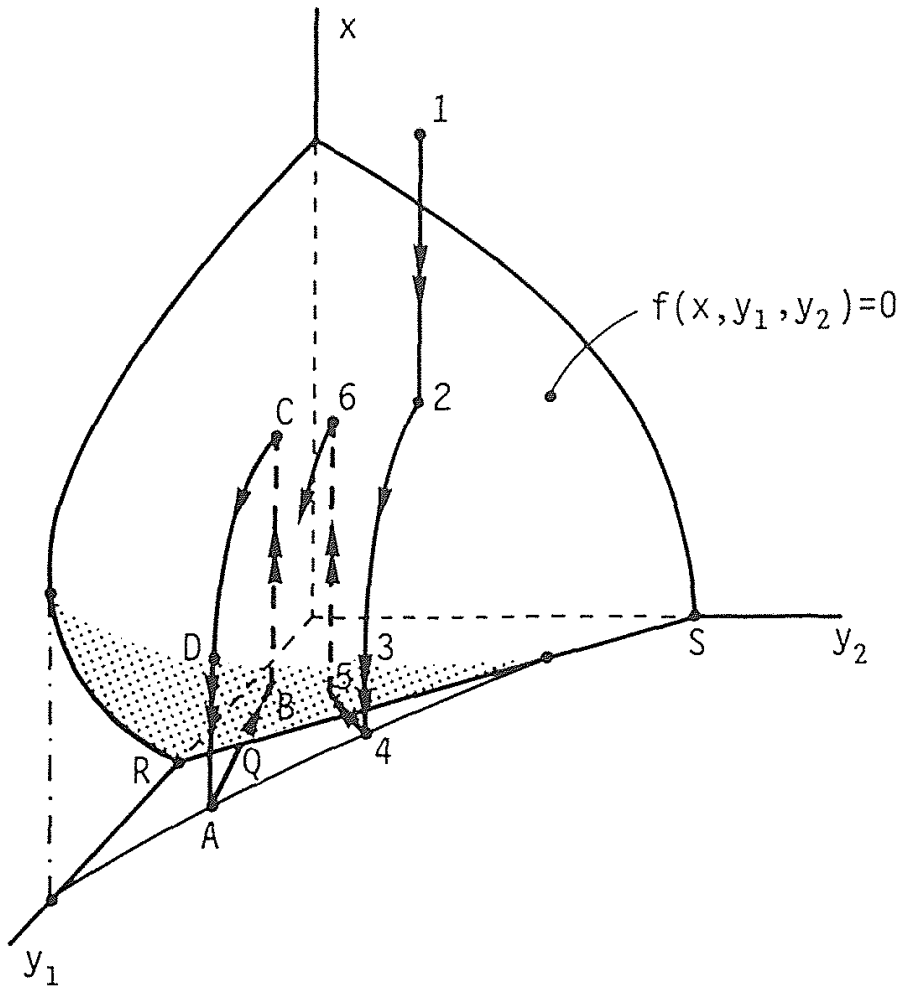

Fig. 8. The fast manifold $f = 0$ of the competition model (18) and the slow–fast limit cycle ABCD. Segments of trajectories with one and two arrows develop at low and high speed, respectively.

point 3 the prey loses stability and collapses to zero (point 4 of Fig. 8). From this point on, the two predators slowly (but exponentially) decay because they have no food, and the result obtained in this paper shows that the system evolves past line RS along the unstable trivial manifold until a point is reached (point 5 of Fig. 8) at which the prey suddenly regenerates, thus bringing the system back on the upper part of the fast manifold (point 6). The transient continues, with alternate fast and slow transitions, and tends, for suitable values of the parameters, to a slow–fast limit cycle ABCD which has the two characteristics pointed out in this paper: practical absence of the fast component of the ecosystem during a portion of the cycle (segment AB), and evolution along an unstable manifold (segment QB). Of course, the minimum and maximum densities reached by the two predators during the cycle (points A and B in Fig. 8) are strictly related through an integral equation that can be derived from equation (5). We do not present here the explicit results, because the analytical derivation is rather lengthy.

Of course, competitive systems do not always behave as in Fig. 8. Very often the trajectory tends asymptotically to one of the two faces (x, y_1) or (x, y_2) (i.e., coexistence is not possible). But, when this does not happen, coexistence is possible through the concatenation of two long and alternate seasons: one (segment CD) has abundant resources, while the other (segment AB) has very scarce resources.

The complete analysis of the problem can be found in Muratori and Rinaldi (1989a), where explicit coexistence conditions are given in terms of inequalities on the 10 parameters identifying the model. However, we would like to point out that the geometry of the limit cycles given in that paper is not correct, since the problem of slow transitions at extremely low densities of the fast component was not understood at this time.

CONCLUSIONS

The problem of slow–fast limit cycles in predator–prey systems has been considered in this paper. We have shown, through a series of important examples, that such limit cycles are characterized by a period of virtual absence of the fast component of the ecosystem (segment AB in Figs 2, 5, 7 and 8). The minimum and maximum densities reached by the slow component of the ecosystem during the cycle correspond to the start and end points of the above slow transition (points A and B in Figs 2, 5, 7 and 8) and can be computed one from the other using a simple integral relationship [equation (5)] first derived by Schecter (1985) for general dynamical systems and specialized here to predator–prey systems. This integral equation has been applied to the classical predator–prey model (logistic prey and Holling's-type predator) and has allowed us to describe a very simple graphical procedure for computing the minimum density reached by the predator during the cycle. Finally, we have shown how these results can be used to detect the geometry of the limit cycles of more complex predator–prey systems such as three trophic level food chains, forest-pest models, and competition systems.

The conclusion is that the existence of slow–fast limit cycles can be ascertained by means of the separation principle (Muratori and Rinaldi, 1991), while the geometry of the cycle itself can be fully specified only by using the integral equation presented in this paper.

ACKNOWLEDGMENTS

We thank our colleagues Marino Gatto and Sandro Salsa for stimulating discussions on the problem.

APPENDIX

We prove in this Appendix that the function $y_{\min}(z)$, implicitly defined by equation (14), is decreasing with respect to z.

For this, let us differentiate equation (13) with respect to z, thus obtaining

$$\int_{y_{\min}(z)}^{y_{\max}} \frac{f(0, y)}{yg^2(0, y, z)} g_z(0, y, z)\, \mathrm{d}y + \frac{f[0, y_{\min}(z)]}{y_{\min}(z) g[0, y_{\min}(z), z]} \frac{\mathrm{d}y_{\min}(z)}{\mathrm{d}z} = 0$$

Since $f[0, y_{\min}(z)] > 0$, $y_{\min}(z) > 0$, and $g[0, y_{\min}(z), z] < 0$ the sign of $\mathrm{d}y_{\min}(z)/\mathrm{d}z$ coincides with that of

$$I = \int_{y_{\min}(z)}^{y_{\max}} \frac{f(0, y)}{yg(0, y, z)} \frac{g_z(0, y, z)}{g(0, y, z)} \mathrm{d}y \tag{A1}$$

But the function

$$\frac{g_z(0, y, z)}{g(0, y, z)} = \frac{a_2}{d(b_2 + y) + a_2 z}$$

is positive and decreasing with respect to y while the function $f(0, y)/yg(0, y, z)$ is negative for $y < y_Q$ and positive for $y > y_Q$. Hence, from (13) and (A1) it follows that

$$\begin{aligned} 0 &= \int_{y_{\min}(z)}^{y_Q} \frac{f(0, y)}{yg(0, y, z)} \frac{g_z(0, y_Q, z)}{g(0, y_Q, z)} \mathrm{d}y \\ &\quad + \int_{y_Q}^{y_{\max}} \frac{f(0, y)}{yg(0, y, z)} \frac{g_z(0, y_Q, z)}{g(0, y_Q, z)} \mathrm{d}y \\ &> \int_{y_{\min}(z)}^{y_Q} \frac{f(0, y)}{yg(0, y, z)} \frac{g_z(0, y, z)}{g(0, y, z)} \mathrm{d}y \\ &\quad + \int_{y_Q}^{y_{\max}} \frac{f(0, y)}{yg(0, y, z)} \frac{g_z(0, y, z)}{g(0, y, z)} \mathrm{d}y = I \end{aligned}$$

Thus, $\mathrm{d}y_{\min}(z)/\mathrm{d}z < 0$ since $I < 0$.

REFERENCES

Antonovsky, M.Ya., Fleming R.A., Kuznetsov, Yu.A. and Clark W.C., 1990. Forest-pest interaction dynamics: the simplest mathematical models. Theor. Popul. Biol., 37: 343–367.

Butler, G.J. and Waltman, P., 1981. Bifurcation from a limit cycle in a two predator–one prey ecosystem modeled on a chemostat. J. Math. Biol., 12: 295–310.

Cheng, K.S., 1981. Uniqueness of a limit cycle for a predator–prey system. SIAM J. Math. Anal., 12: 541–548.

Diener, F. and Diener, M., 1983. Sept formules relatives aux canards. C.R. Acad. Sci. Paris, 297: 577–580.

El-Owaidy, H. and Ammar, A.A., 1986. Mathematical analysis of a food-web model. Math. Biosci., 81: 213–227.

Farkas, M., 1984. Zip bifurcation in a competition model. Nonlin.-Anal. Theor. Math. Appl., 8: 1295–1309.

Freedman, H.I. and So, J.W.H., 1985. Global stability and persistence of simple food chains. Math. Biosci., 76: 69–86.

Freedman, H.I. and Waltman, P., 1977. Mathematical analysis of some three species food-chain models. Math. Biosci., 33: 257–276.

Freedman, H.I. and Waltman, P., 1984. Persistence in models of three interacting predator–prey populations. Math. Bosci., 68: 213–231.

Freedman, H.I. and Waltman, P., 1985. Persistence in a model with three competitive populations. Math. Bosci., 73: 89–101.

Gard, T.C., 1980. Persistence in food webs: Holling-type food chains. Math. Biosci., 49: 61–67.

Gard, T.C., 1981. Persistence for ecosystem microcosm models. Ecol. Modelling, 12: 221–229.

Gard, T.C., 1987. Uniform persistence in multispecies population models. Math. Biosci., 85: 93–104.

Gard, T.C. and Hallam, T.G., 1979. Persistence in food-webs. I. Lotka–Volterra food chains. Bull. Math. Biol., 41: 877–891.

Guckenheimer, J. and Holmes, P., 1983. Nonlinear Oscillations, Dynamical Systems and Bifurcations of Vector Fields. Springer-Verlag, New York, pp. 68–69.

Haberman, R., 1979. Slowly varying jump and transition phenomena associated with algebraic bifurcation problems. SIAM J. Appl. Math., 37: 69–106.

Holling, C.S., 1965. The functional response of predators to prey density and its role in mimicry and population regulation. Mamm. Entomol. Soc. Can., 45: 5–60.

Hoppensteadt, F., 1974. Asymptotic stability in singular perturbation problems. J. Diff. Eq., 15: 510–521.

Hsu, S.B., Hubbell, S.P. and Waltman, P., 1978a. Competing predators. SIAM J. Appl. Math., 35: 617–625.

Hsu, S.B., Hubbell, S.P. and Waltman, P., 1978b. A contribution to the theory of competing predators. Ecol. Monogr., 48: 337–349.

Keener, J.P., 1983. Oscillatory coexistence in the chemostat: a codimension two unfolding. SIAM J. Appl. Math., 43: 1005–1018.

Koch, A.L., 1974. Competitive coexistence of two predators utilizing the same prey under constant environmental conditions. J. Theor. Biol., 44: 387–395.

Kuang, Y. and Freedman, H.I., 1988. Uniqueness of limit cycles in Gause-type models of predator–prey systems. Math. Biosci., 88: 67–84.

Ludwig, D., Jones, D.D. and Holling, C.S., 1978. Qualitative analysis of insect outbreak systems: the spruce budworm and forest. J. Anim. Ecol., 47: 315–332.

May, R.M., 1972. Limit cycles in predator–prey communities. Science, 17: 900–902.

May, R.M., 1977. Thresholds and breakpoints in ecosystems with a multiplicity of stable states. Nature, 269: 471–477.

McGehee, R. and Armstrong, R.A., 1977. Some mathematical problems concerning the ecological principle of competitive exclusion. J. Diff. Eq., 23: 30–52.

Muratori, S., 1991. An application of the separation principle for detecting slow–fast limit cycles in a three dimensional system. Appl. Math. Comput., 43: 1–18.

Muratori, S. and Rinaldi, S., 1989a. Remarks on competitive coexistence. SIAM J. Appl. Math., 49: 1462–1472.

Muratori, S. and Rinaldi, S., 1989b. A dynamical system with Hopf bifurcations and catastrophes. Appl. Math. Comput., 29: 1–15.

Muratori, S. and Rinaldi, S., 1991. A separation condition for the existence of limit cycles in slow–fast systems. Appl. Math. Mod., 15: 312–318.

Muratori, S. and Rinaldi, S., 1992. Low and high frequency oscillations in three dimensional food chain systems. SIAM J. Appl. Math., in press.

Noy-Meir, I., 1975. Stability of grazing systems: an application of predator–prey graphs. J. Ecol., 63: 459–483.

O'Malley, Jr., R.E., 1974. Introduction to Singular Perturbations. Academic Press, New York.

Osipov, A.V., Söderbacka, G. and Eirola, T., 1986. On the existence of positive periodic solutions in a dynamical system of two predators–one prey type. Viniti Deponent No. 4305-B86 (in Russian).

Rinaldi, S. and Muratori, S., 1992. Limit cycles in slow–fast forest-pest models. Theor. Popul. Biol., 41: 26–43.

Schecter, S., 1985. Persistent unstable equilibria and closed orbits of a singularly perturbed equation. J. Diff. Eq., 60: 131–141.

Shimazu, Y., Sugiyama, K., Kojima, T. and Tomida, E., 1972. Some problems in ecology oriented environmentology. J. Earth Sci. Nagoya Univ., 20: 31–89.

Smith, H.L., 1981. The interaction of steady state and Hopf bifurcations in a two-predator–one-prey competition model. SIAM J. Appl. Math., 42: 27–43.

Zvonkin, A.K. and Shubin, M.A., 1984. Non-standard analysis and singular perturbations of ordinary differential equations. Russ. Math. Surv., 39: 69–131.