Area reserved for document binding

Best printed and viewed on sheetsize A4

MIC_IN

Page 2

L_CH1_IN
L_CH2_IN
PH_CTRL_CH1
PH_CTRL_CH2
RAW_15V

ANALOG_IN

Page 3

L_CH1_IN
L_CH2_IN
FLASH_WR_EN
LOW_SEN
HI_SEN
A_RGHT_IN
A_LFT_IN
MONO_SENS

CODEC

Page 4

A_RGHT_IN
A_LFT_IN
MCLK_ADDA
FS64
FS1
DA_DATA
A_DATA
CCLK
CS_CODEC*
ADDA_PWDN*
AD_DATA
A_RGHT_OUT_NEG
A_RGHT_OUT_POS
A_LFT_OUT_NEG
A_LFT_OUT_POS

ANALOG_OUT

Page 5

A_RGHT_OUT_NEG
A_RGHT_OUT_POS
A_LFT_OUT_NEG
A_LFT_OUT_POS
OUTLEVEL1
OUTLEVEL0
MUTE*

DSP

Page 6

MONO_SENS
HI_SEN
LOW_SEN
FLASH_WR_EN
MCLK
MCK_LOCAL
EN_48_FS
EN_44.1_FS
DIGITAL_IN_SEL
S/PDIF_OUT
FS64
FS1
S/PDIF_IN
DIGITAL_E2
DIGITAL_E1
DIGITAL_E0
SPDIF_ERR
D_IN_PWR_EN
DIGITAL_SEL
DIGITAL_EN*
PH_CTRL_CH2
PH_CTRL_CH1
D[23:0]
A[18:0]
RD*
WR*
RAS
CAS
CE_FLASH*
CS_SRAM*
SPI_MOSI
DSP_SS*
SPI_MISO
SPI_CLK
SPI_DOWNLOAD
DSP_RESET
PEDAL_IMP_SEL

CLOCK

Page 9

MCLK_IN
MCLK_ADDA
MCLK
MCK_LOCAL
DIGITAL_IN_SEL
EN_44.1_FS
EN_48_FS

DIGITAL_IO

Page 10

MCLK_IN
S/PDIF_OUT
FS64
FS1
S/PDIF_IN
DIGITAL_E2
DIGITAL_E1
DIGITAL_E0
SPDIF_ERR
DIGITAL_EN*
DIGITAL_SEL
D_IN_PWR_EN
DIGITAL_IN_SEL

INTERFACE

Page 11

SPI_MOSI
DSP_SS*
SPI_MISO
SPI_CLK
SPI_DOWNLOAD
DSP_RESET
PEDAL_IMP_SEL
RAW_15V

MEM

Page 7/8

D[23:0]
A[18:0]
RD*
WR*
RAS
CAS
CE_FLASH*
CS_SRAM*

RAW_15V

P16004-A

M10

TC Electronic A/S		Designer: MAR,SAK,HJE,NIM
Title: MANHATTAN EC		Module title: MAINBOARD
Number: P16004	Revision: ABH	Previous page: XX
Date: 8-30-2011_9:14	Filename: P16004-A	Page / of: 1 / 11

Area reserved for document binding

Best printed and viewed on sheetsize A4

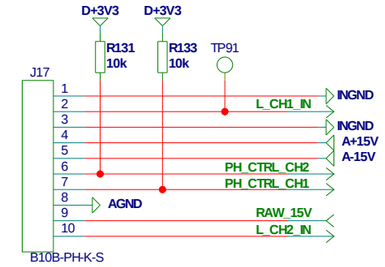

TC Electronic A/S		Designer: MAR,SAK,HJE,NIM
Title: MANHATTAN EC	Module title: MAINBOARD	
Number: P16004	Revision: ABH	Previous page: XX
Date: 8-30-2011_9:14	Filename: MIC_IN	Page / of: 9 / 11

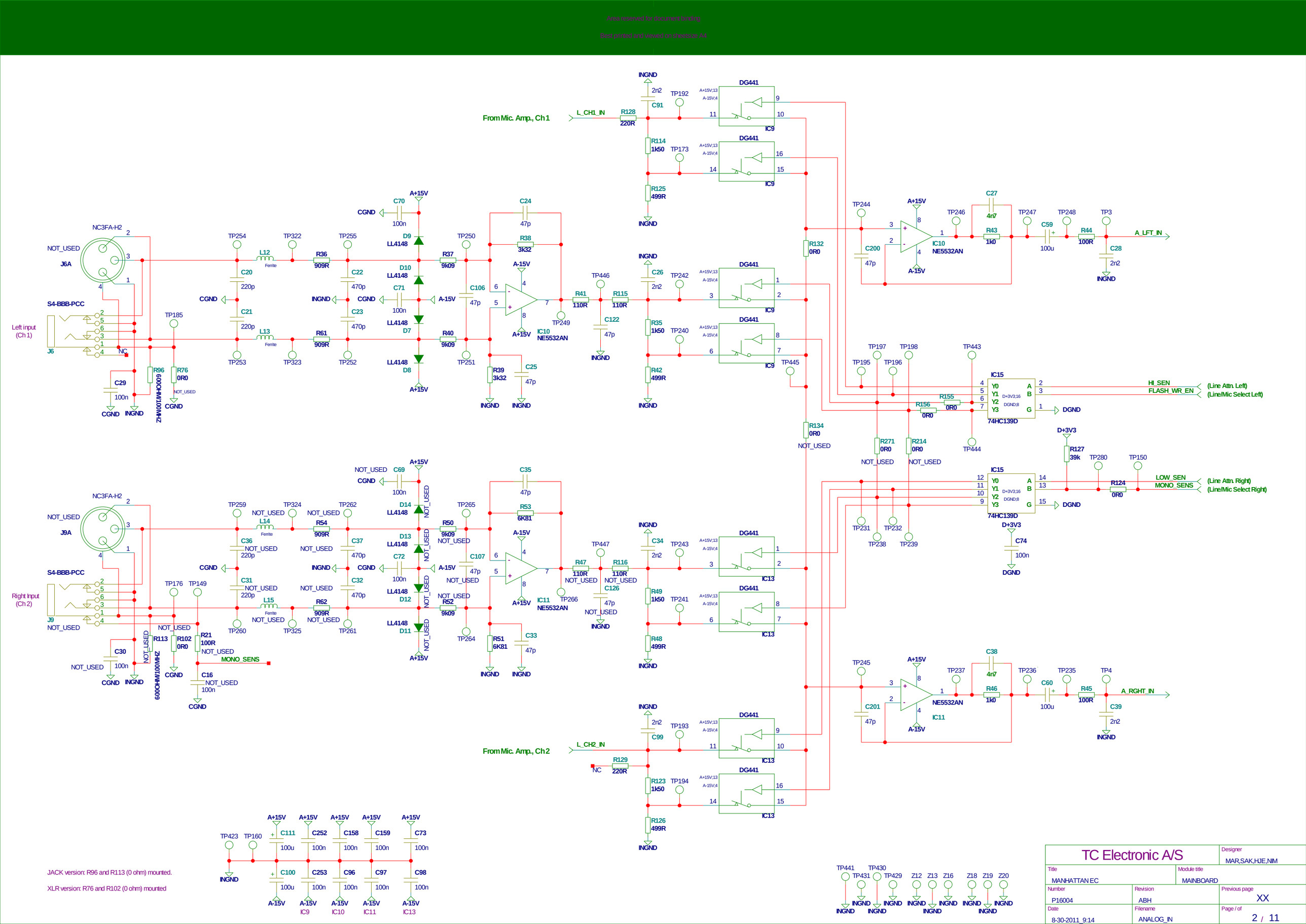

JACK version: R96 and R113 (0 ohm) mounted.

XLR version: R76 and R102 (0 ohm) mounted

TC Electronic A/S		Designer: MAR,SAK,HJE,NIM
Title: MANHATTAN EC		Module title: MAINBOARD
Number: P16004	Revision: ABH	Previous page: XX
Date: 8-30-2011_9:14	Filename: ANALOG_IN	Page / of: 2 / 11

Area reserved for document binding

Best printed and viewed on sheetsize A4

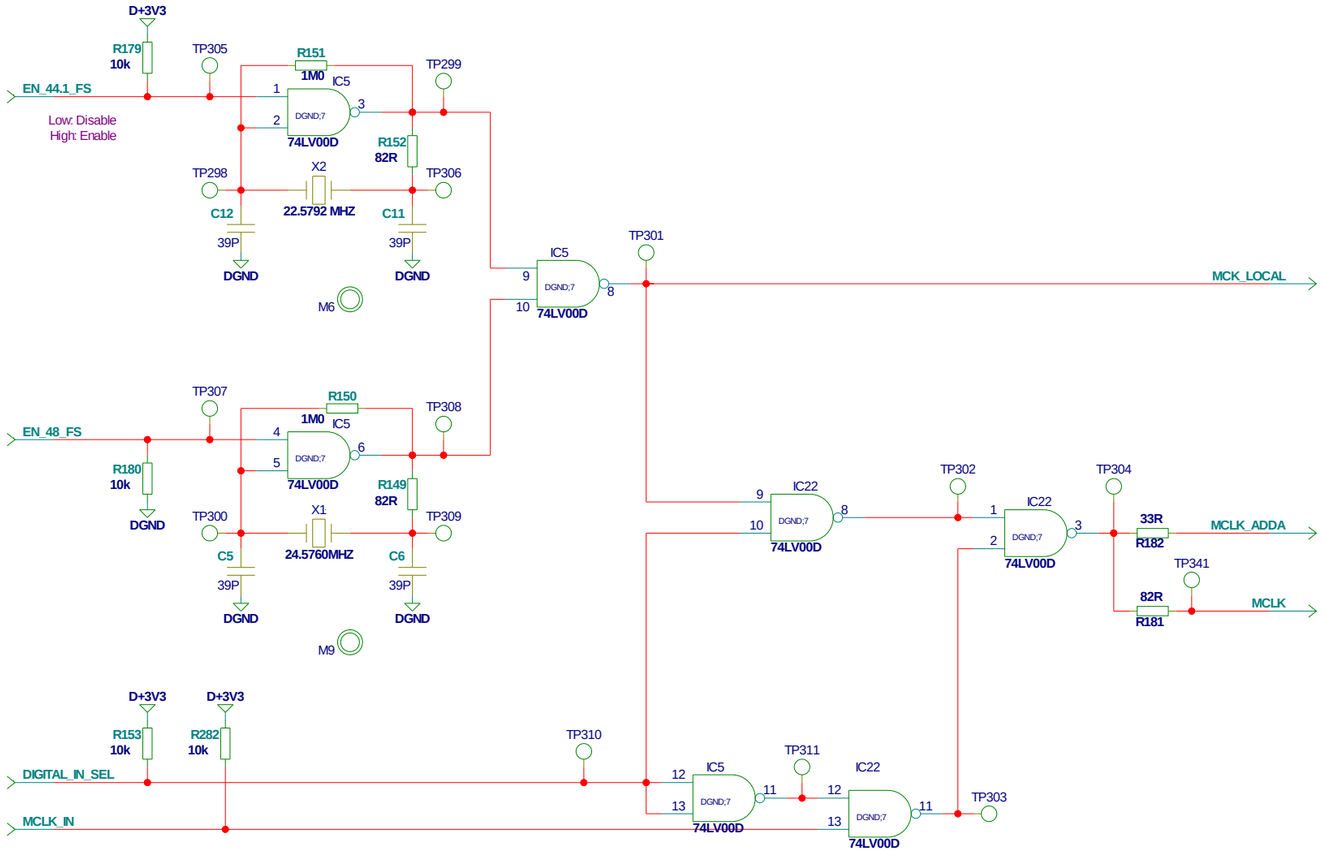

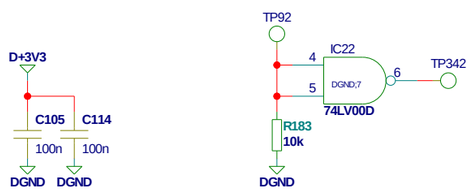

TC Electronic A/S		Designer: MAR,SAK,HJE,NIM
Title: MANHATTAN EC		Module title: MAINBOARD
Number: P16004	Revision: ABH	Previous page: XX
Date: 8-30-2011_9:14	Filename: CLOCK	Page / of: 5 / 11

Area reserved for document binding

Best printed and viewed on sheetsize A4

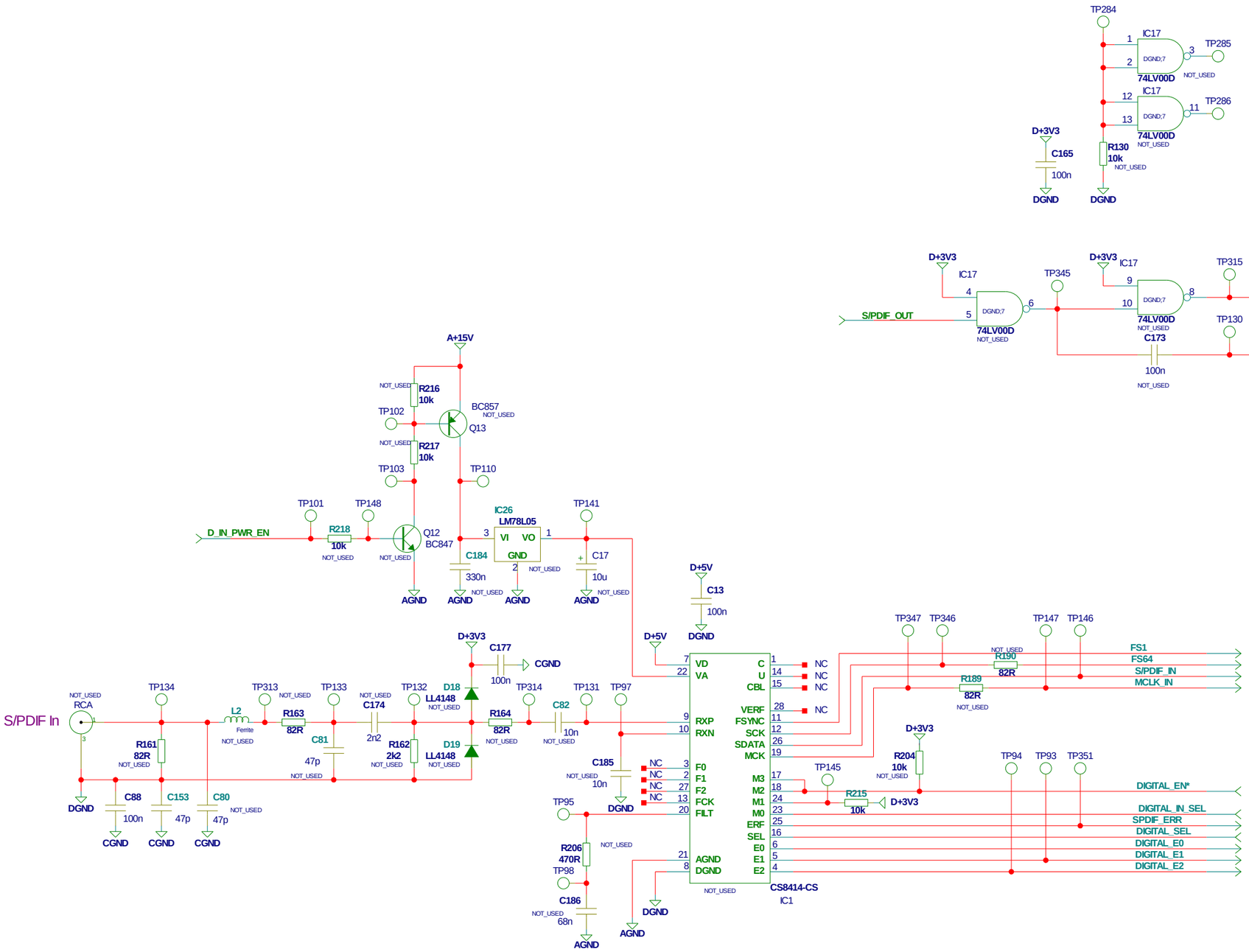

TC Electronic A/S		Designer: MAR,SAK,HJE,NIM
Title: MANHATTAN EC	Module title: MAINBOARD	
Number: P16004	Revision: ABH	Previous page: XX
Date: 8-30-2011_9:14	Filename: DIGITAL_IO	Page / of: 11 / 11

Area reserved for document binding

Best printed and viewed on sheetsize A4

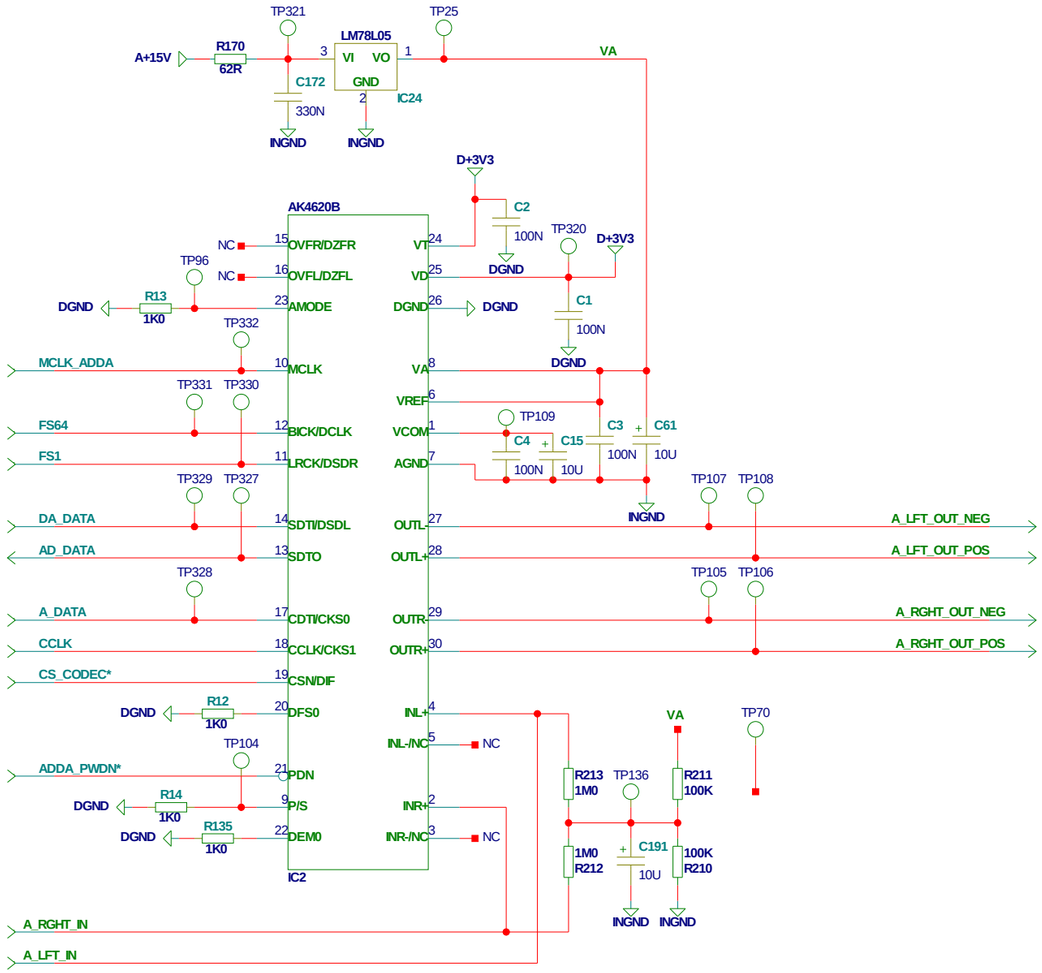

TC Electronic A/S			Designer: MAR,SAK,HJE,NIM
Title: MANHATTAN EC		Module title: MAINBOARD	
Number: P16004	Revision: ABH		Previous page: XX
Date: 8-30-2011_9:14	Filename: CODEC		Page / of: 4 / 11

Area reserved for document binding

Best printed and viewed on sheetsize A4

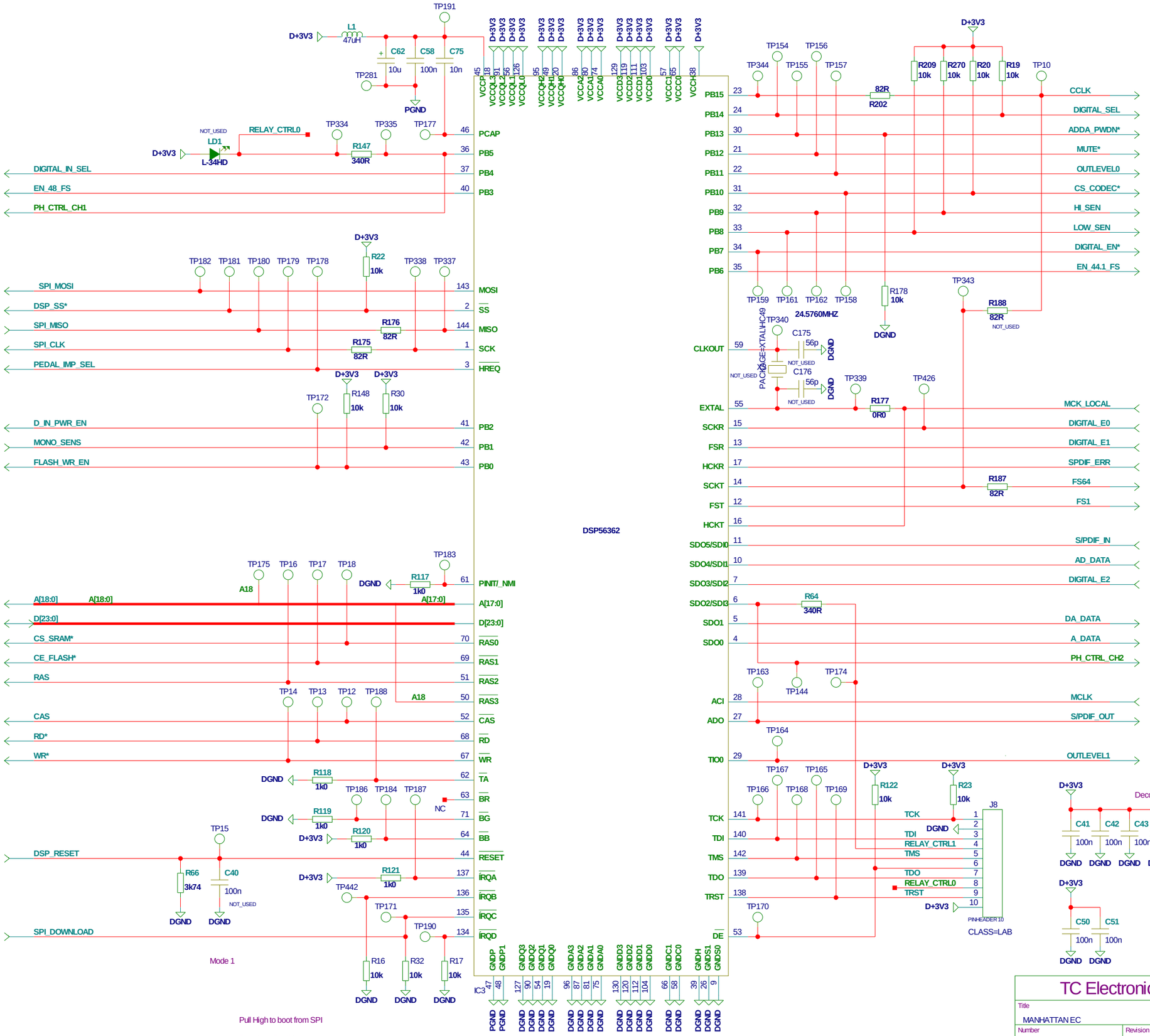

TC Electronic A/S			Designer: MAR,SAK,HJE,NIM
Title: MANHATTAN EC		Module title: MAINBOARD	
Number: P16004	Revision: ABH		Previous page: XX
Date: 8-30-2011_9:14	Filename: DSP		Page / of: 10 / 11

Area reserved for document binding

Best printed and viewed on sheetsize A4

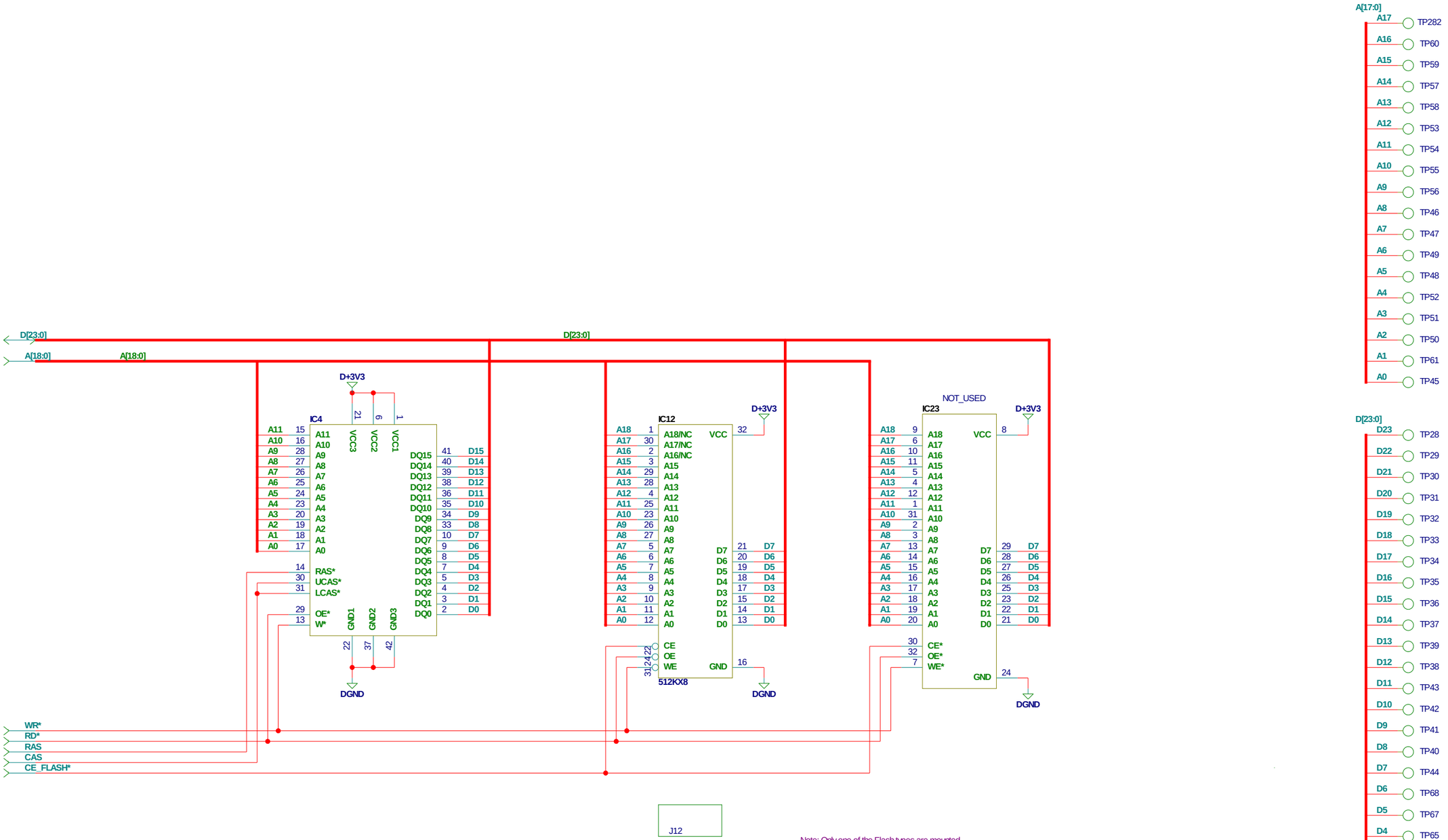

Note: Only one of the Flash types are mounted

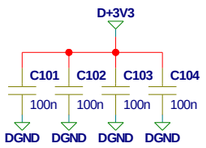

TC Electronic A/S		Designer: MAR,SAK,HJE,NIM
Title: MANHATTAN EC	Module title: MAINBOARD	
Number: P16004	Revision: ABH	Previous page: XX
Date: 8-30-2011_9:14	Filename: MEM	Page / of: 6 / 11

Area reserved for document binding

Best printed and viewed on sheetsize A4

SOJ36/300 mil - 128k/512k

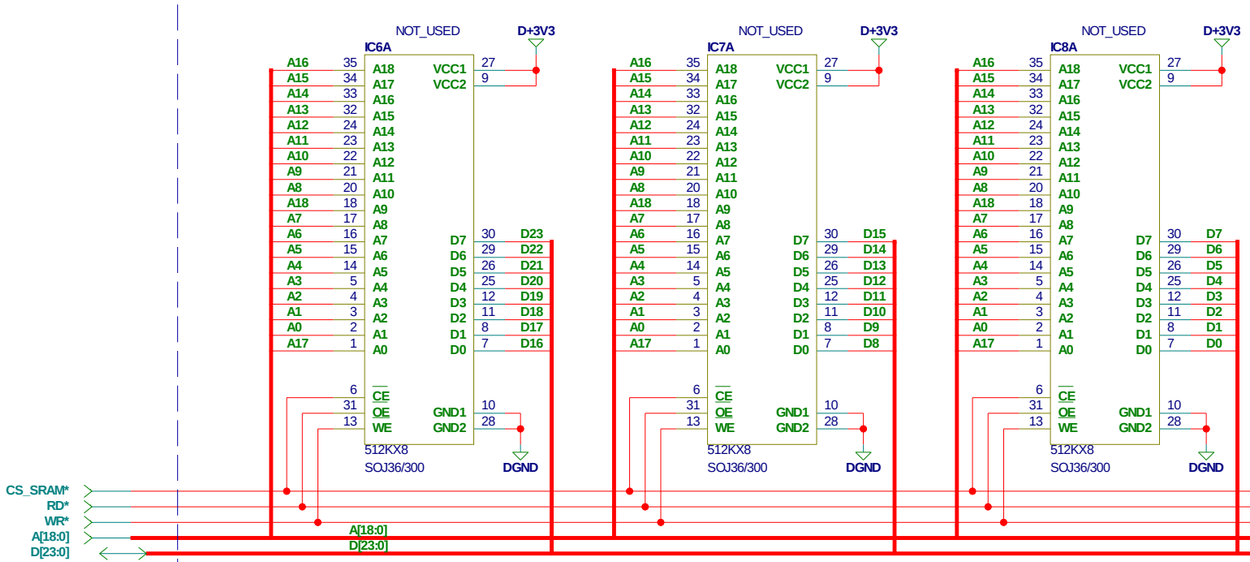

SOJ36/400 mil - 128k/512k

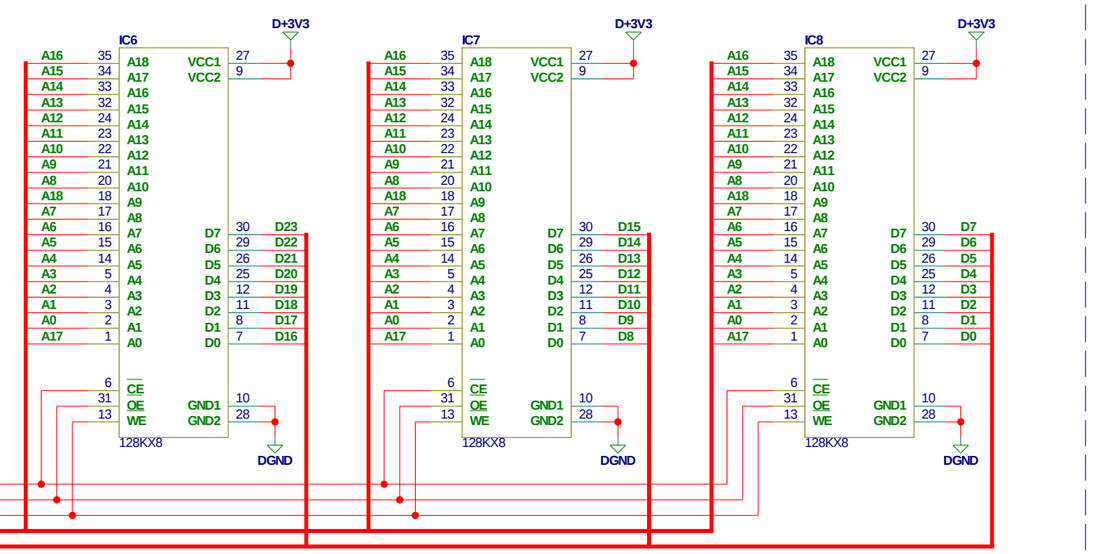

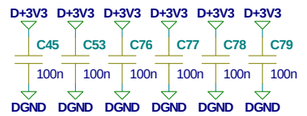

TC Electronic A/S			Designer: MAR,SAK,HJE,NIM
Title: MANHATTAN EC		Module title: MAINBOARD	
Number: P16003	Revision: ABH		Previous page: XX
Date: 8-30-2011_9:14	Filename: MEM		Page / of: 7 / 11

Area reserved for document binding

Best printed and viewed on sheetsize A4

A_LFT_OUT_NEG
A_LFT_OUT_POS
R140 2k80
R141 2k80
R24 5k11
R28 5k11
R26 340R
R27 340R
C148 100p
C7 1n5
R15 8k25
R25 8k25
C8 330p
C9 330p
IC18 NE5532AN
N12VL
P12VL
C121 100u
R74 220R
MUTE
R207 2k2
Q10 2SD2114
C139 1n0
R109 2k49
R110 1k24
R111 634R
R112 634R
C180 100n
D36 4V7
R196 6k8
A+15V
74HCT4052
IC25
R197 100R
OUTLEVEL1
OUTLEVEL0
R171 412k
R77 2k49
R31 2k49
R78 2k49
IC19 NE5532AN
R81 38R3
R185 604k
R79 4k99
C57 27p
R80 2k49
R172 221k
R87 2k49
R85 4k99
R88 2k49
R33 2k49
R86 2k49
C63 27p
R84 38R3
C123 220u
C124 220u
C142 47p
C143 47p
L4 Ferite
L5 Ferite
LM1
LM2
Q2
Q6
2SD2114
R82 1k50
R83 1k50
D6 MMBZ15
D22 MMBZ15
C141 220p
C140 220p
C68 100n
OGNDL
J11A NOT_USED
J11
Left output
R77, R99 // 887K, 1%
R79, R95 // 604K, 1%
R87, R89 // 221K, 1%
R173 412k
R99 2k49
R34 2k49
R98 2k49
IC20 NE5532AN
R97 38R3
R186 604k
R95 4k99
C65 27p
R90 2k49
R174 221k
R89 2k49
R103 4k99
R92 2k49
R63 2k49
R91 2k49
C66 27p
R104 38R3
C125 220u
C128 220u
C146 47p
C144 47p
L7 Ferite
L6 Ferite
RM1
RM2
Q7
Q8
R144 1k50
R93 1k50
D23 MMBZ15
D24 MMBZ15
C147 220p
C145 220p
C67 100n
OGNDR
J10A NOT_USED
J10
Right output
R70 8k25
C54 330p
C10 330p
R72 8k25
C55 1n5
C149 100p
R142 2k80
R143 2k80
R67 5k11
R68 5k11
R71 340R
R69 340R
R94 220R
MUTE
R208 2k2
Q11 2SD2114
C138 1n0
R105 2k49
R106 1k24
R107 634R
R108 634R
C179 100n
D35 4V7
R195 6k8
A-15V
Mute circuit
Decoupling for Analog
Power for output stage amplifiers
JACK EMC Spacer/Bracket
M2
M3
M4
M5
NOT_USED

TC Electronic A/S		Designer: MAR,SAK,HJE,NIM
Title: MANHATTAN EC		Module title: MAINBOARD
Number: P16004	Revision: ABH	Previous page: XX
Date: 8-30-2011_9:14	Filename: ANALOG_OUT	Page / of: 3 / 11

Area reserved for document binding

Best printed and viewed on sheetsize A4

Front Conn.

Power Supply Connection

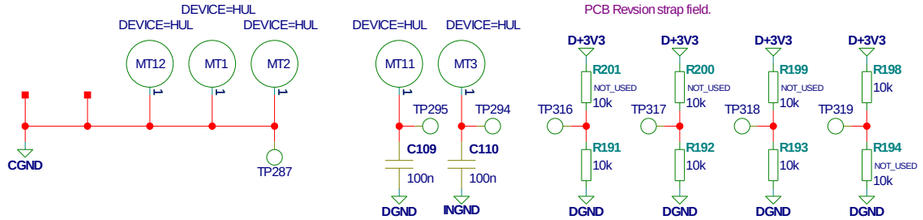

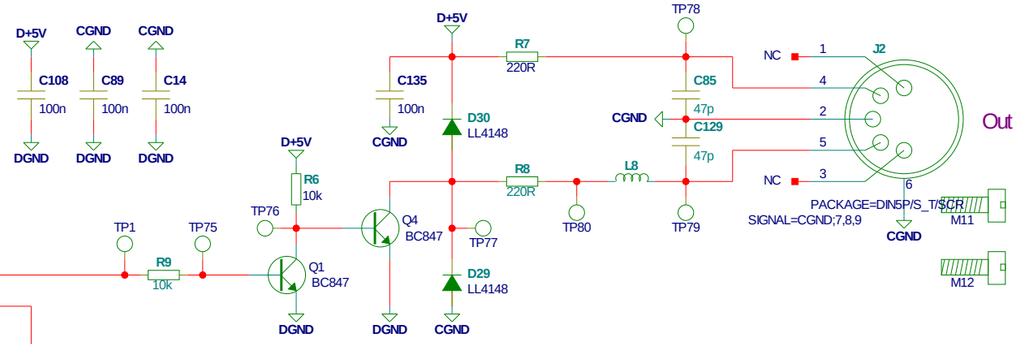

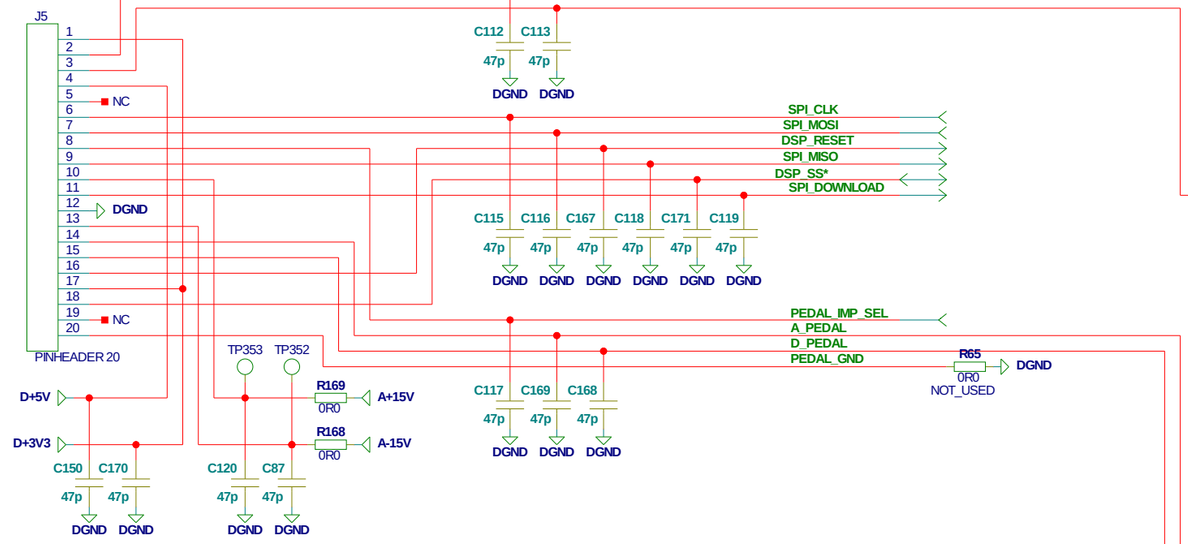

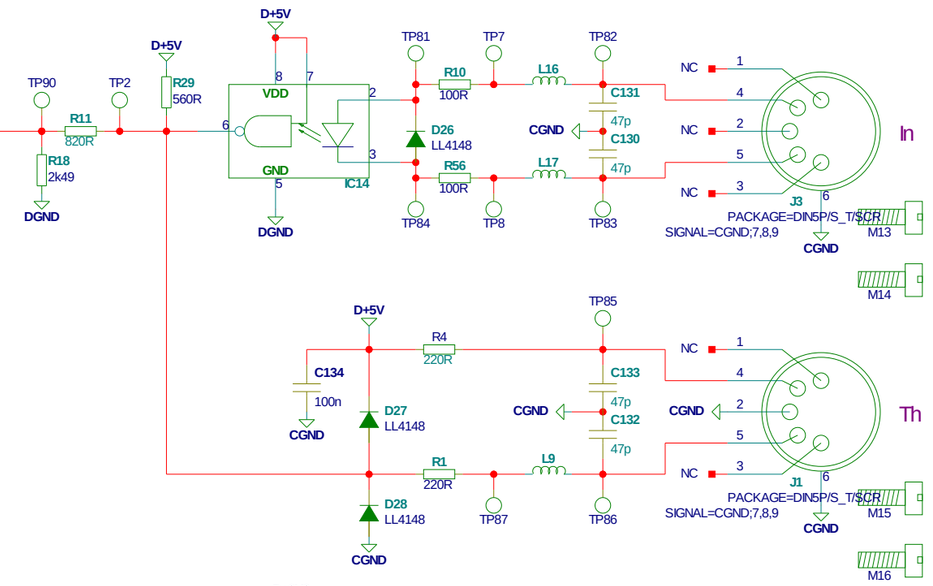

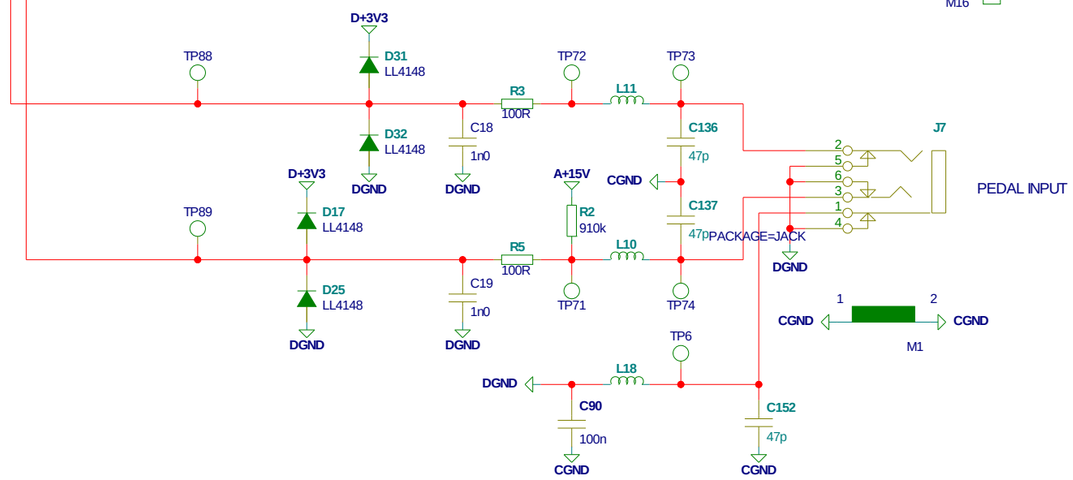

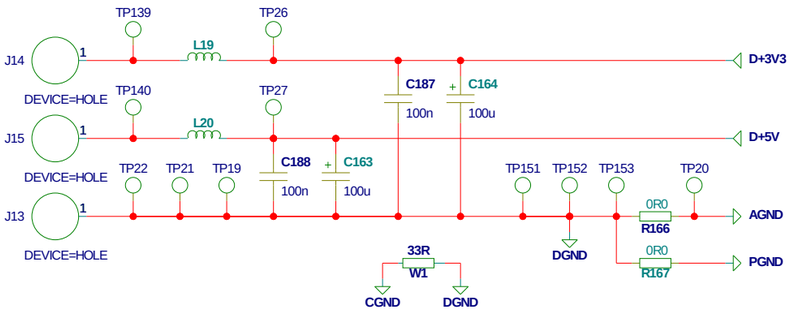

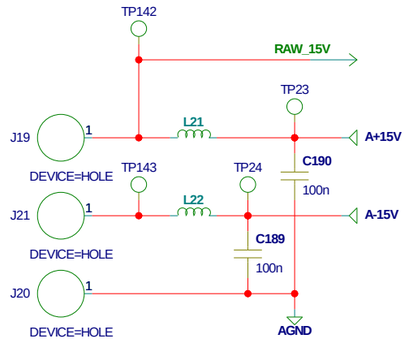

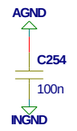

TC Electronic A/S		Designer: MAR,SAK,HJE,NIM
Title: MANHATTAN EC		Module title: MAINBOARD
Number: P16004	Revision: ABH	Previous page: XX
Date: 8-30-2011 9:14	Filename: INTERFACE	Page / of: 8 / 11