Drone Technology & UAV Systems Internship- Task 1

By- Kumar Aman

Email: aman0arc@gmail.com

PART-1

What is UAV vs Drone

<u>UAV</u>

UAVs are aircraft that operate without a human pilot onboard. They range from small, nimble quadcopters used for local tasks to large, fixed-wing systems designed for long-distance missions. These vehicles combine elements of aerodynamics, remote control technology, and onboard computer processing to navigate and perform specific tasks in the air.

<u>Drone</u>

A drone is an unmanned aircraft. Formally known as an Unmanned Aerial Vehicle (UAV), it is a flying device that operates without a human pilot on board.

Instead of a cockpit, drones are controlled either by a remote pilot on the ground or by onboard computers using pre-programmed flight plans and automation.

Types of Drone

1. Multi-rotor – They use multiple propellers (usually 4, 6, or 8) to generate lift and control movement by varying the speed of each motor. They are best for precision tasks, photography, and tight spaces. They are omnidirectional. They can take off and land vertically (VTOL).

2. Fixed-Wing - These look like traditional aeroplanes. They have a rigid wing and use a single motor (pusher or tractor) to create forward thrust, while the wings generate lift. They are best for mapping massive areas, long-range surveillance, and agriculture. They require a runway, a catapult launcher, or a hand-launch. Recovery often involves a belly landing or a net. They can stay airborne for hours and cover hundreds of KM.

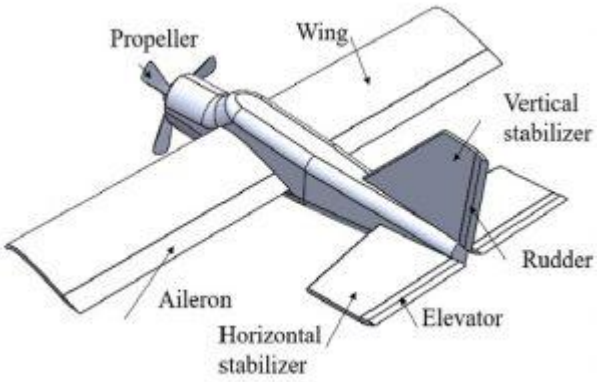

3. Hybrid-VTOL - Hybrid VTOL (Vertical Take-Off and Landing) combine vertical takeoff capabilities with fixed-wing efficiency, allowing for takeoff without runway. These drones can fly for hours (e.g., up to 4 hours) covering large distances for surveying or logistics.

Basic Components

1. Flight Controller - The Flight Controller is the central processing unit. It runs the firmware like ArduPilot or PX4 that calculates how to keep the drone stable and following commands. It takes input from the pilot or mission computer, processes sensor data, and tells the motors how fast to spin. It connects to all other components via UART, I2C, or CAN bus.
2. ESC (Electronic Speed Controller) – It converts the low-voltage signal from the flight controller into the high-current 3-phase power needed to drive brushless motors.
3. IMU (Inertial Measurement Unit) – It provides the fundamental sense of balance. Most modern Flight Controllers have an IMU built-in, though high-end systems use external, dampened IMUs. It consists of a **Gyroscope** which measures angular velocity and an **Accelerometer** which measures linear acceleration. Without an IMU, a drone cannot level itself; it would tumble out of the sky instantly.
4. GPS Module - The **GPS** provides global positioning and "heading" (when paired with a Compass/Magnetometer). It allows for autonomous missions, "Return to Launch" (RTL) safety features, and "Position Hold" modes.
5. LiDAR (Light Detection and Ranging) - 1D LiDAR are used as precision altimeters for perfect landings and terrain following. 360° LiDAR allow the drone to map its surroundings in real-time to avoid walls or trees. It is used for Simultaneous Localization and Mapping.

PID Control

PID stands for Proportional, Integral, and Derivative. It is a feedback loop mechanism that constantly calculates the "error" between what you want and what is actually happening.

MAVLink

MAVLink (Micro Air Vehicle Link) is a lightweight, header-only message marshaling library. It is the "language" used for communication between the drone and the outside world.

Autopilot Firmware

This is the operating system that runs on the flight controller. It contains the PID loops, interprets the MAVLink messages, and manages all hardware drivers. E.g., ArduPilot, PX4 etc.