Enclustra User Schematics

Mars EB1 Revision 2.5

Disclaimer

User schematics do not include proprietary Enclustra design elements, such as power supply circuits.
These circuits use optimized designs which are extremely compact and remain proprietary to Enclustra.
The user manual provides all necessary information to use the module and its interfaces.

User schematics are provided after purchase of Enclustra hardware, and may also be provided in certain cases before purchase, to assist in product evaluation.
No part of the schematics may be copied or modified without written permission from Enclustra.

Full schematics, including a full bill-of-materials, may be available through the purchase of a hardware licence for the product in question.
Please contact Enclustra Sales for more information.

Note: DNE = Do Not Equip (parts not equipped by default)

© Enclustra GmbH

Mars EB1 Base Board

Revision 2.5

Sheet 1: Cover
Sheet 2: Module Connector
Sheet 3: System Controller PLD
Sheet 4: USB Connectors
Sheet 5: USB Controller
Sheet 6: Mini Camera Link Interface 0
Sheet 7: Mini Camera Link Interface 1
Sheet 8: Oscillator / SD-Card / EEPROM / Flash
Sheet 9: Ethernet Interface / Battery / Reset
Sheet 10: HDMI Interface
Sheet 11: Anios/PMOD/JTAG/Control Connectors
Sheet 12: User Interface
Sheet 13: Power Input / Power Control
Sheet 14: Power 5V / 3.3V / 2.5V
Sheet 15: System Monitor
Sheet 16: Mechanics

Mars SO-DIMM Connector

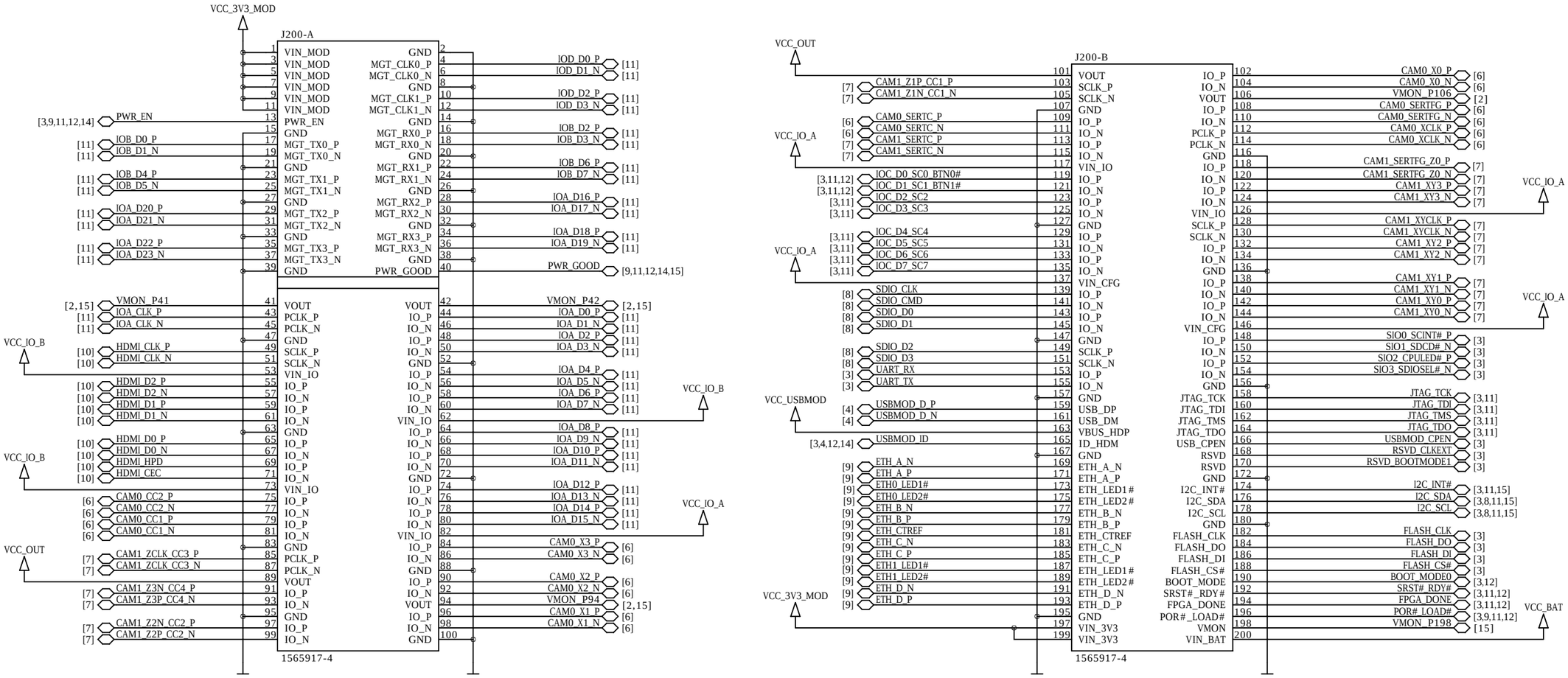

Mars Decoupling

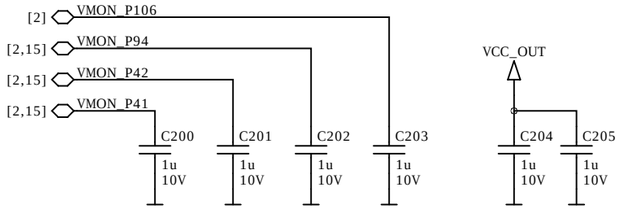

Mars Mounting Holes

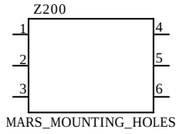

ENCLUSTRA	Copyright © 2021 by Enclustra GmbH	Sheet Name 2_MODULE_CONNECTOR	Customer No 0000	Revision R2.5	DNE = do not equip	Confidential
	Company Enclustra GmbH	Project Mars EB1	Project No 307	Designed MHEI	Date 20 Apr 2021	Sheet/sheets 2 / 16

System Controller PLD

The SC pinout not included in user schematics.

Programming the system controller PLD with a user bitstream voids the board warranty.

I2C Address: 0 0 0 1 1 0 1 Rw

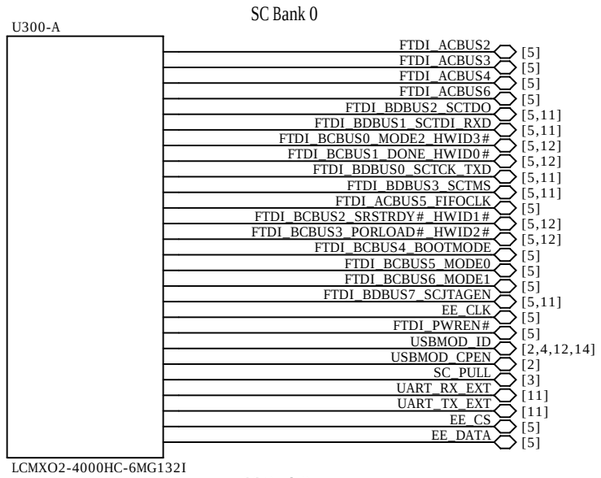

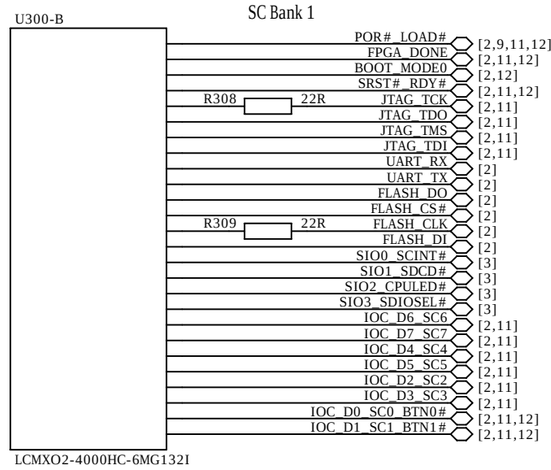

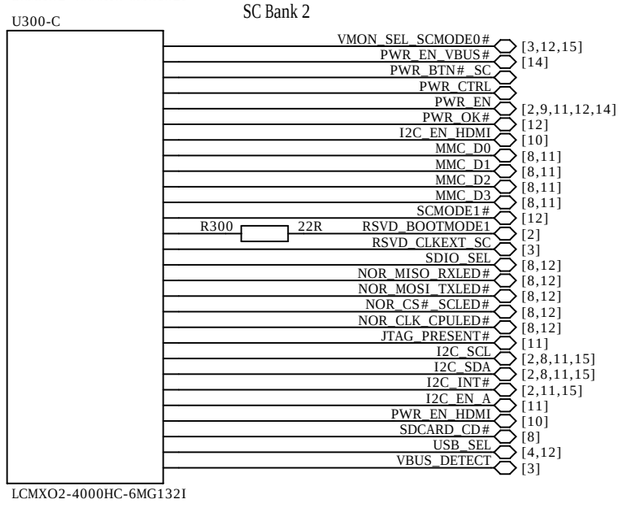

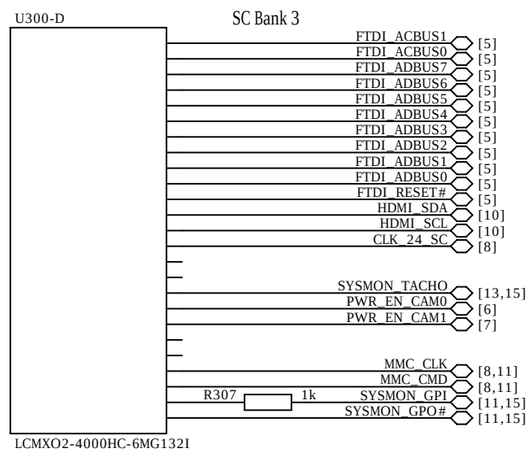

SC Power

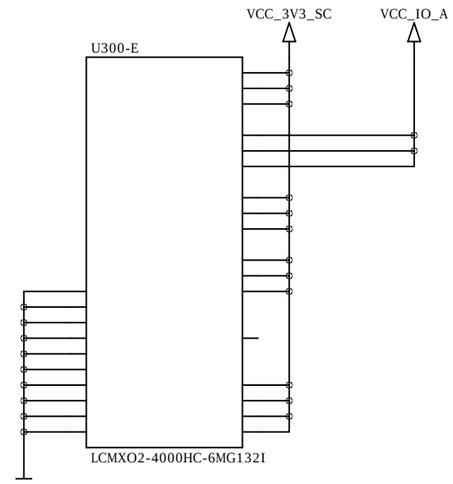

SC Decoupling

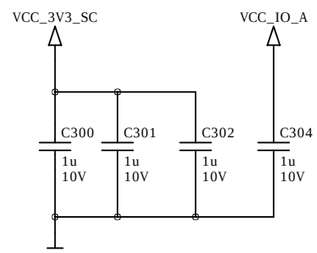

SIO Function Select

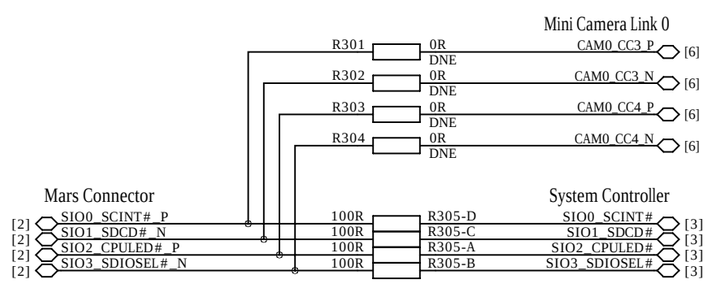

USB VBUS Detection

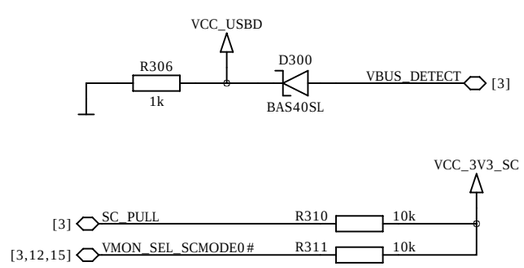

Synchronous Module Clock

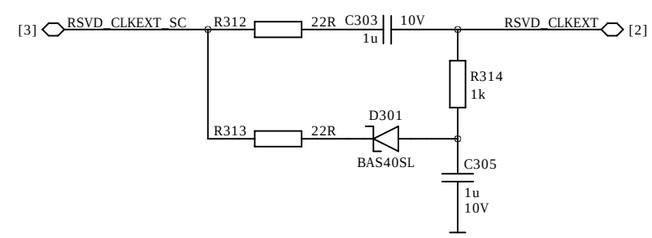

ENCLUSTRA	Copyright © 2021 by Enclustra GmbH	Sheet Name 3_SYSTEM_CONTROLLER_PLD	Customer No 0000	Revision R2.5	DNE = do not equip	Confidential
	Company Enclustra GmbH	Project Mars EB1	Project No 307	Designed MHEI	Date 20 Apr 2021	Sheet/sheets 3 / 16

Micro USB 2.0 Device Connector

front panel

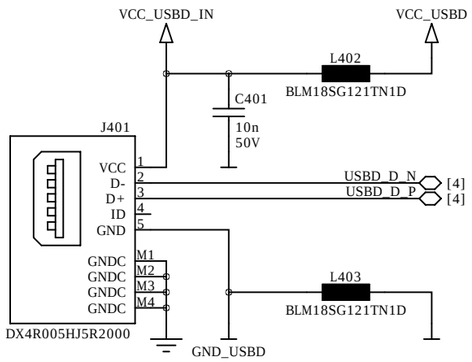

Micro USB 2.0 Device Connector

on side

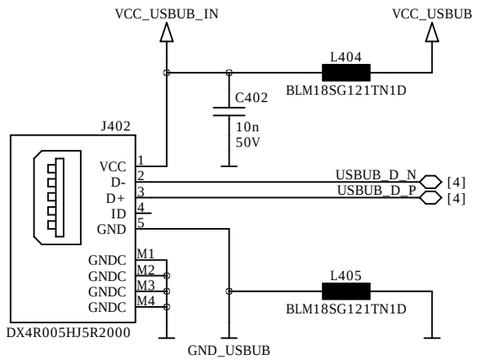

USB 2.0 Host Connector

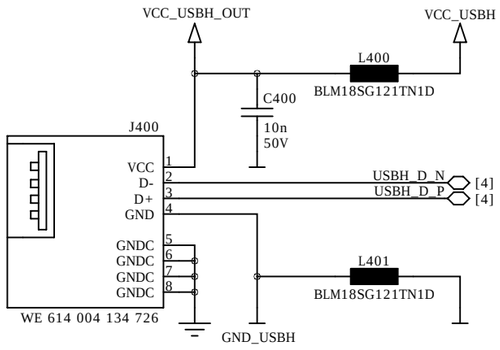

USB Multiplexers

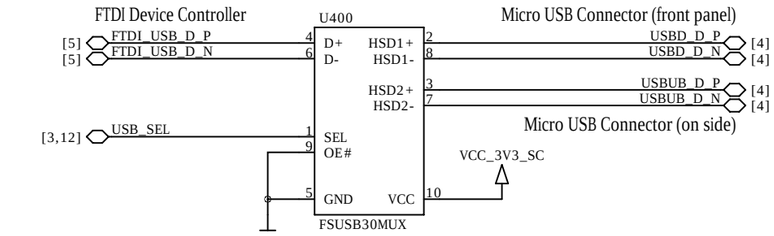

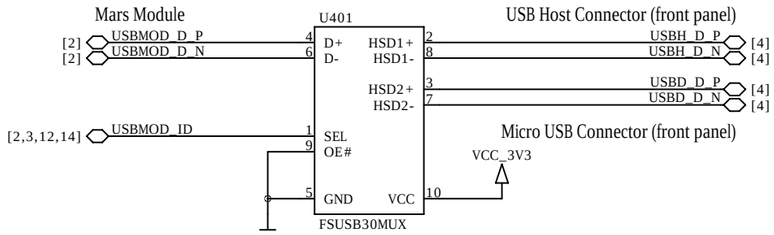

USB ESD Protection

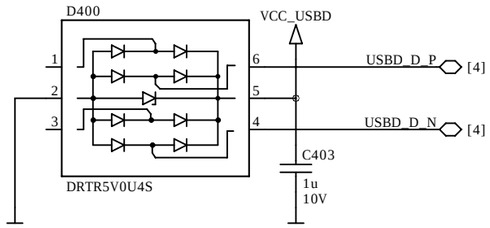

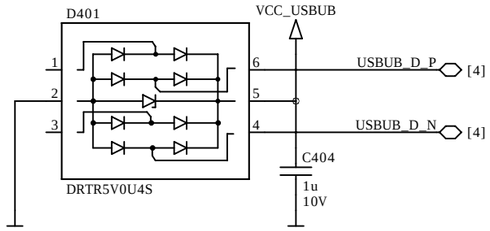

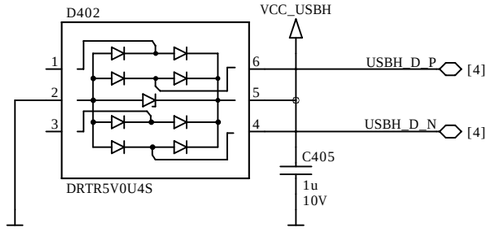

FTDI USB 2.0 Device Controller

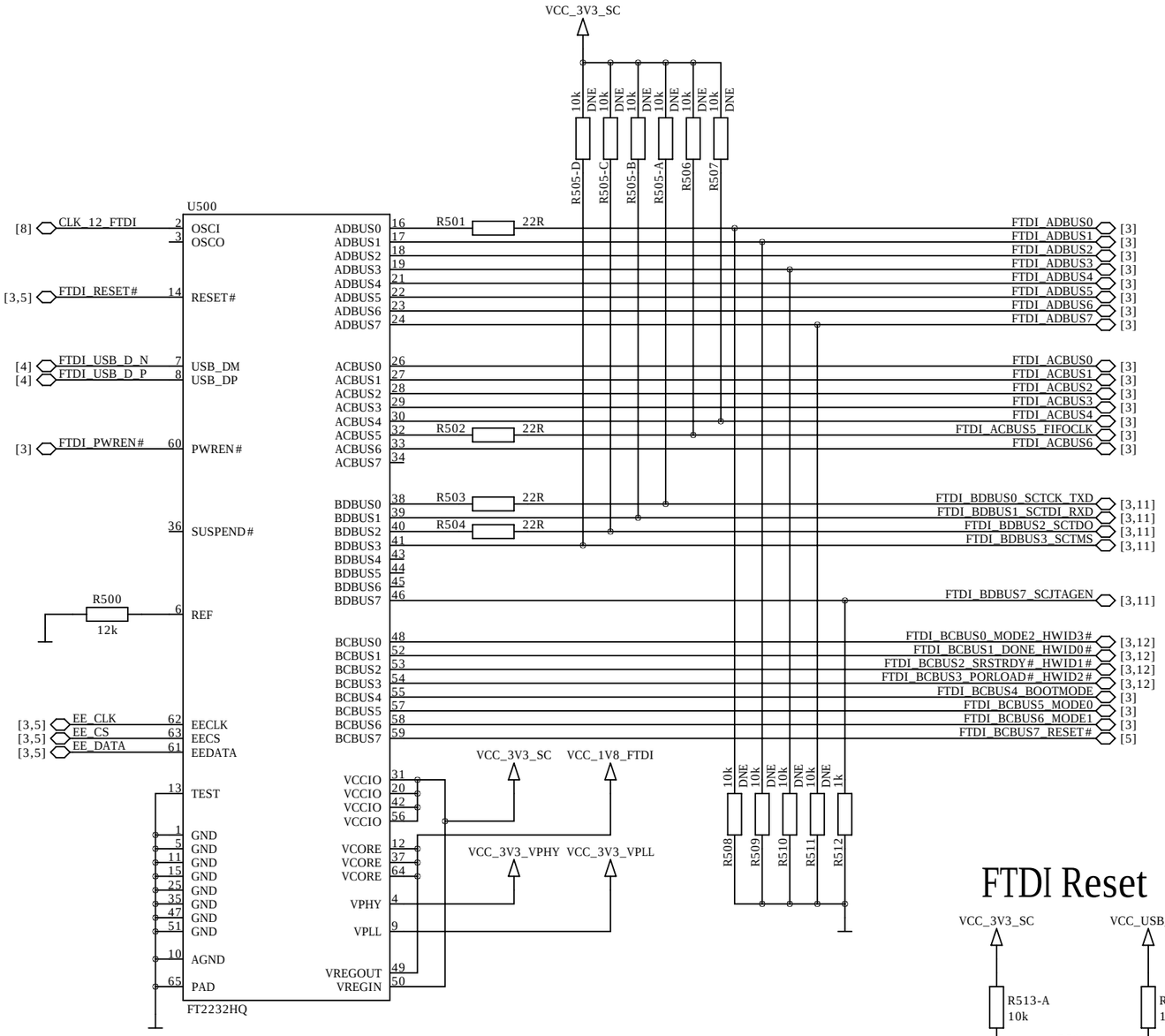

FTDI EEPROM

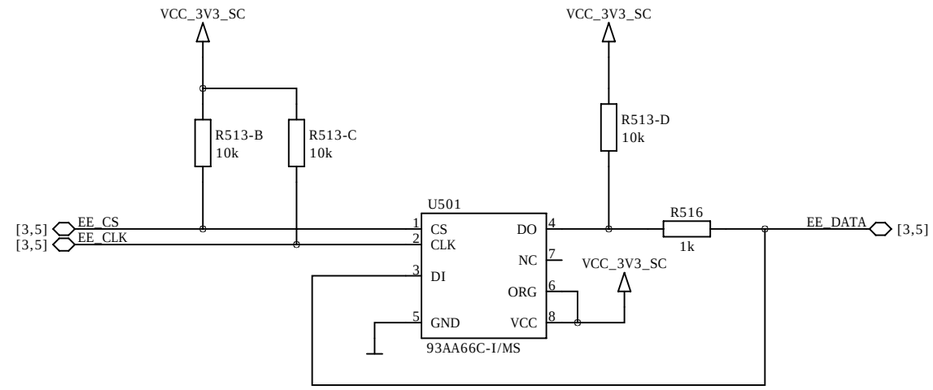

FTDI Decoupling

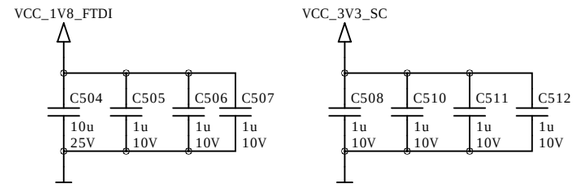

LDO 5V to 3.3V 0.15A

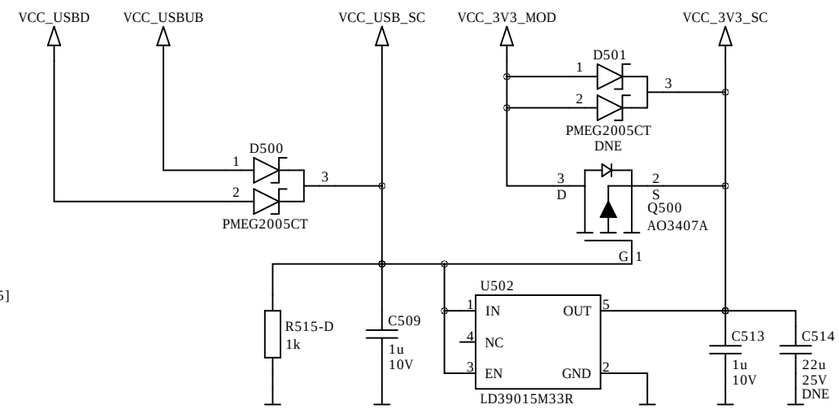

FTDI Reset

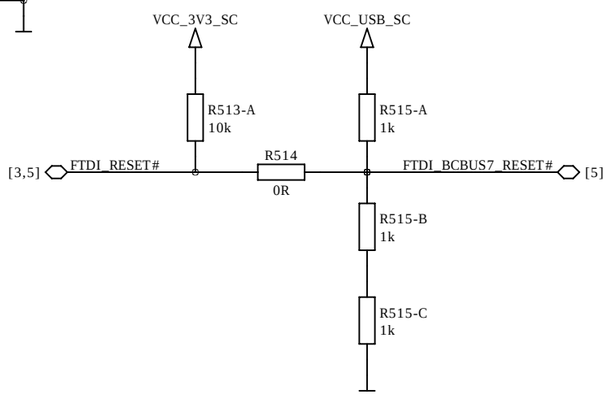

FTDI Power Filters

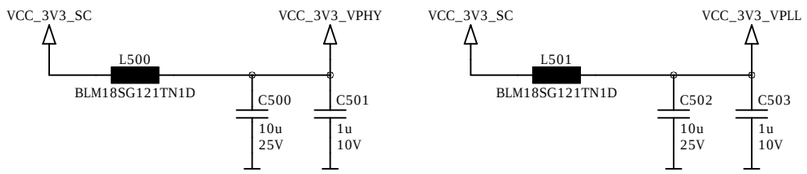

ENCLUSTRA	Copyright © 2021 by Enclustra GmbH	Sheet Name 5_USB_CONTROLLER	Customer No 0000	Revision R2.5	DNE = do not equip	Confidential
	Company Enclustra GmbH	Project Mars EB1	Project No 307	Designed MHEI	Date 20 Apr 2021	Sheet/sheets 5 / 16

Mini Camera Link Interface 0

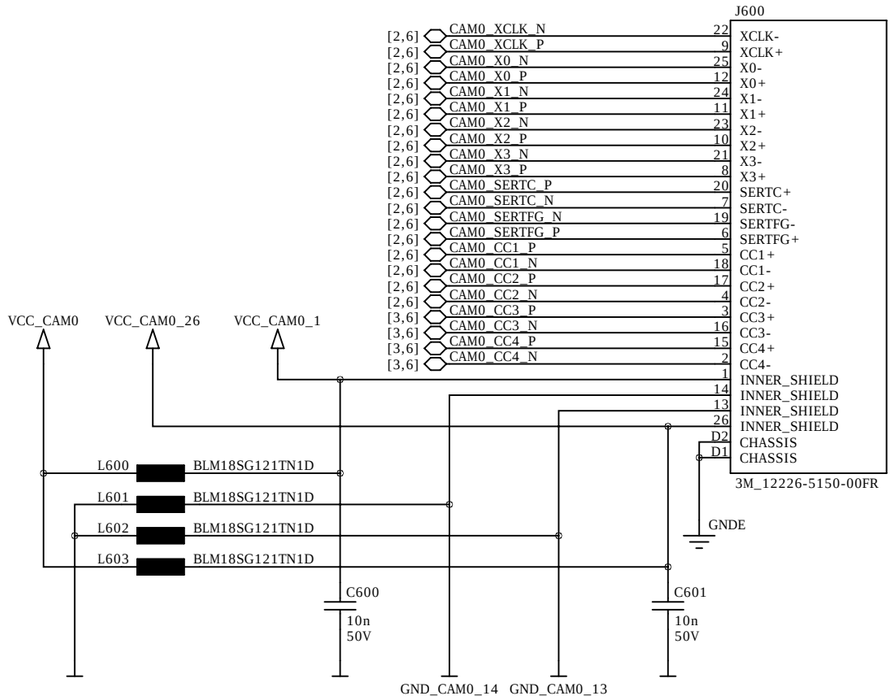

Camera Link ESD Protection

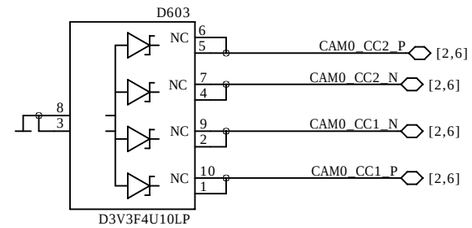

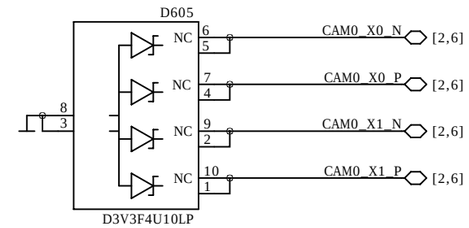

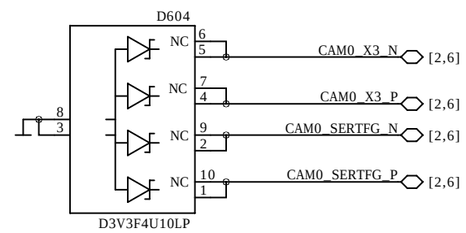

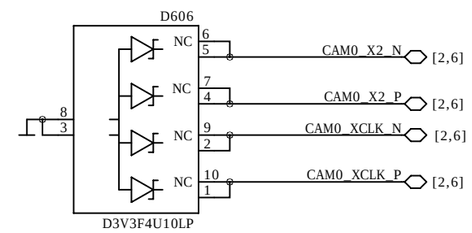

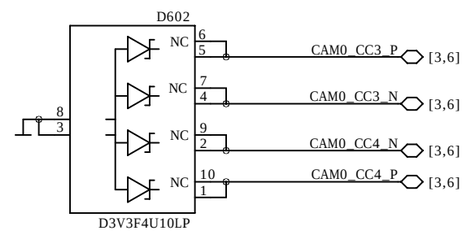

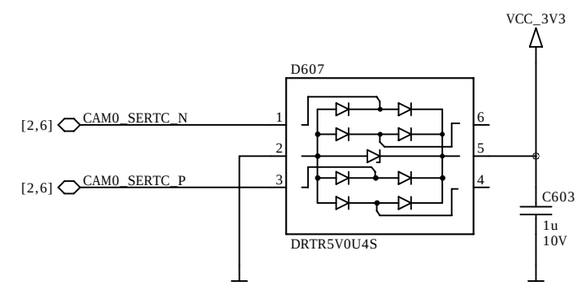

Camera Link Power

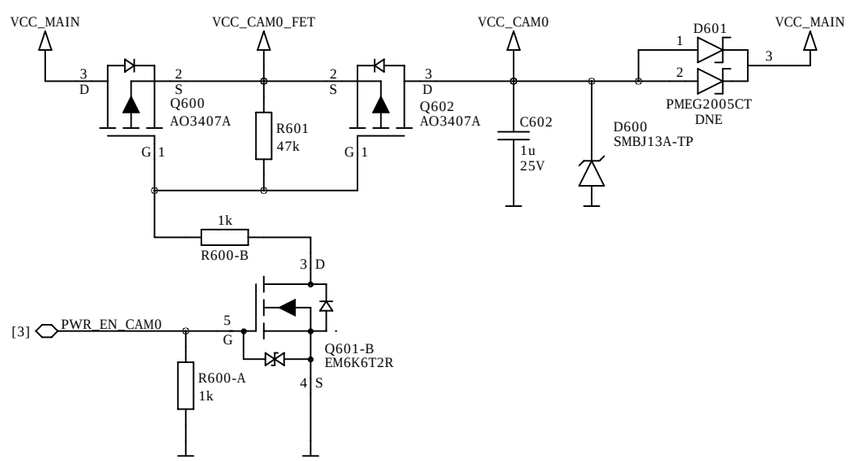

Mini Camera Link Interface 1

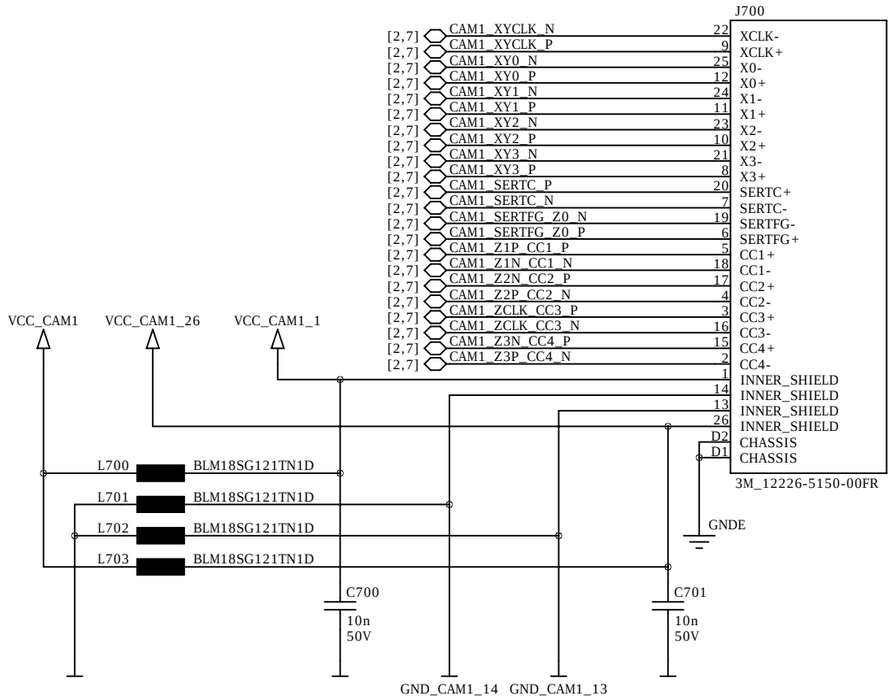

Camera Link ESD Protection

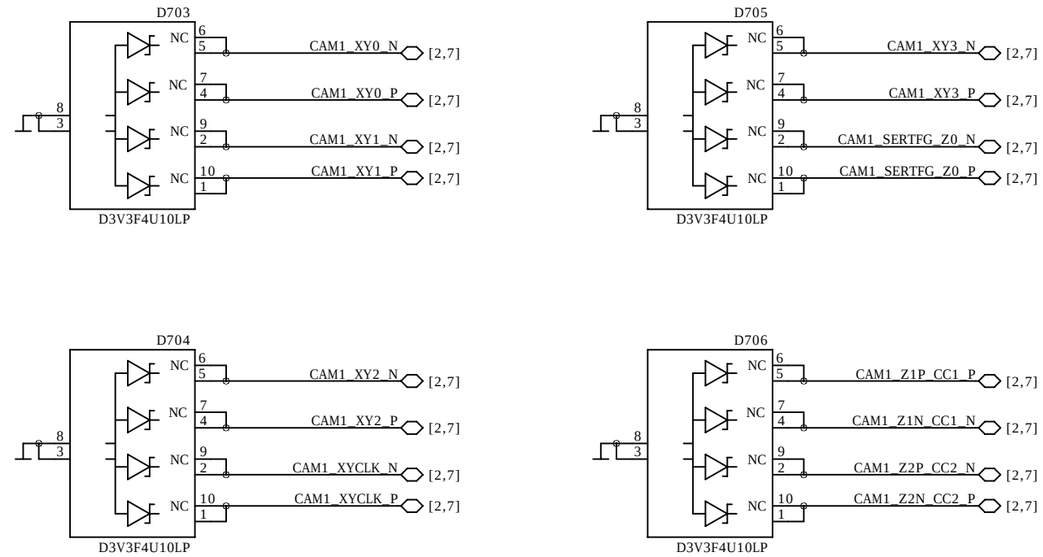

Camera Link Power

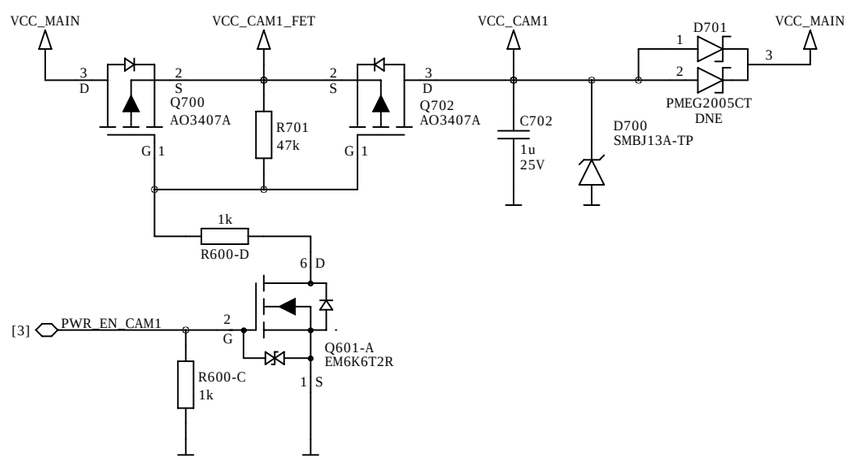

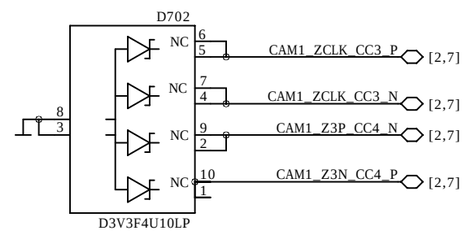

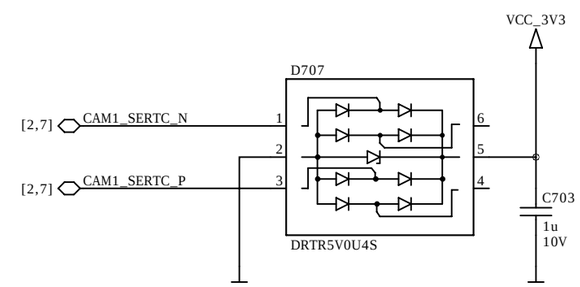

ENCLUSTRA	Copyright © 2021 by Enclustra GmbH	Sheet Name 7_MINI_CAMERA_LINK_1	Customer No 0000	Revision R2.5	DNE = do not equip	Confidential
	Company Enclustra GmbH	Project Mars EB1	Project No 307	Designed MHEI	Date 20 Apr 2021	Sheet/sheets 7 / 16

SDIO Level Shifter

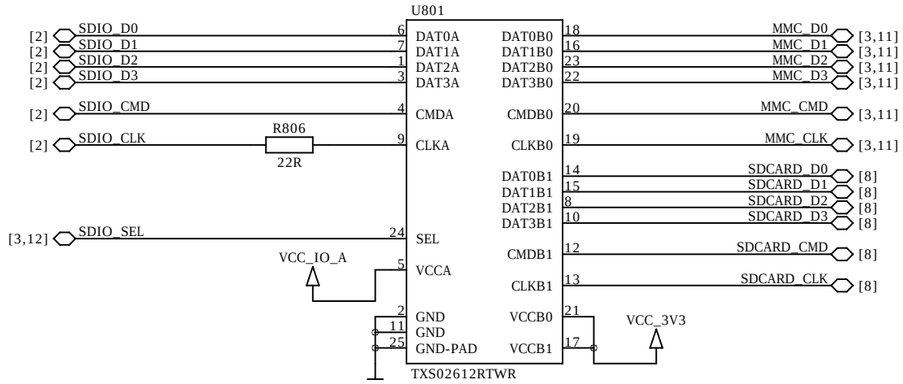

User EEPROM

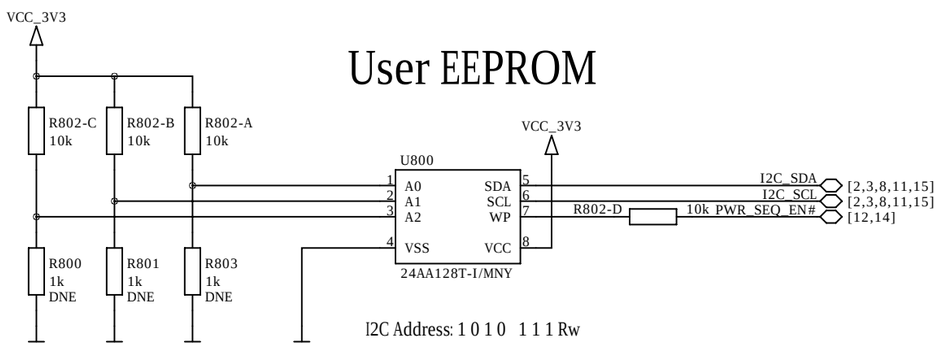

I2C Address: 1 0 1 0 1 1 1 Rw

SPI NOR Flash

optional

pin compatible with Altera EPCS/EPCQ and Micron N25Q series

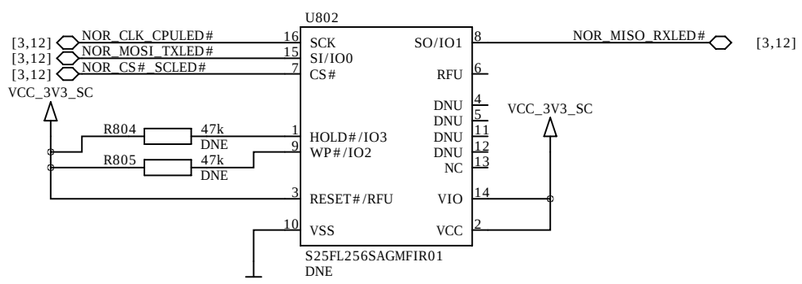

Micro SD-Card

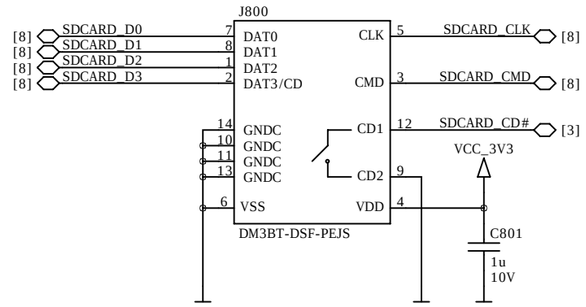

Oscillator

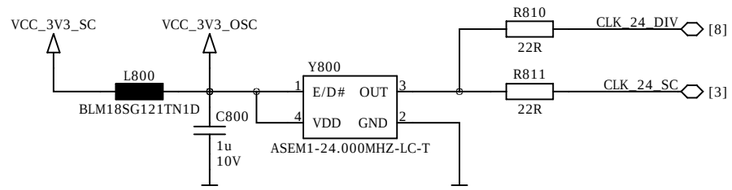

Clock Divider

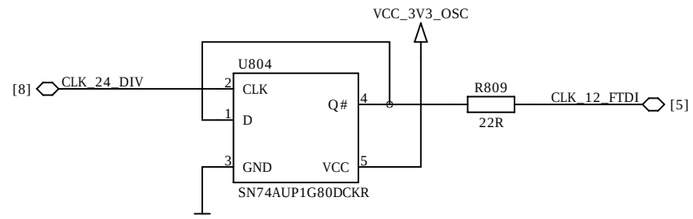

Secure EEPROMs

for Enclustra use only

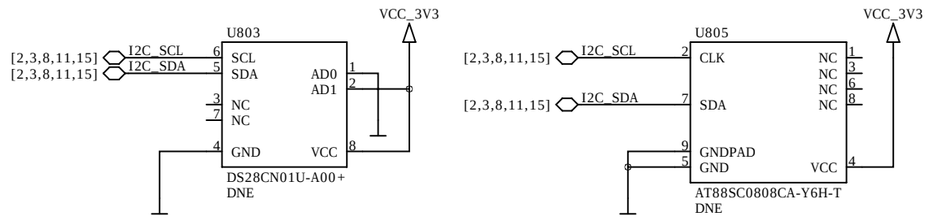

I2C Address: 1 0 1 0 1 0 0 Rw

I2C Address: 0 0 0 1 X 1 1 Rw

ENCLUSTRA	Copyright © 2021 by Enclustra GmbH	Sheet Name 8_OSCILLATOR_SDCARD_EEPROM_NOR	Customer No 0000	Revision R2.5	DNE = do not equip	Confidential
	Company Enclustra GmbH	Project Mars EB1	Project No 307	Designed MHEI	Date 20 Apr 2021	Sheet/sheets 8 / 16

Gigabit Ethernet Interface

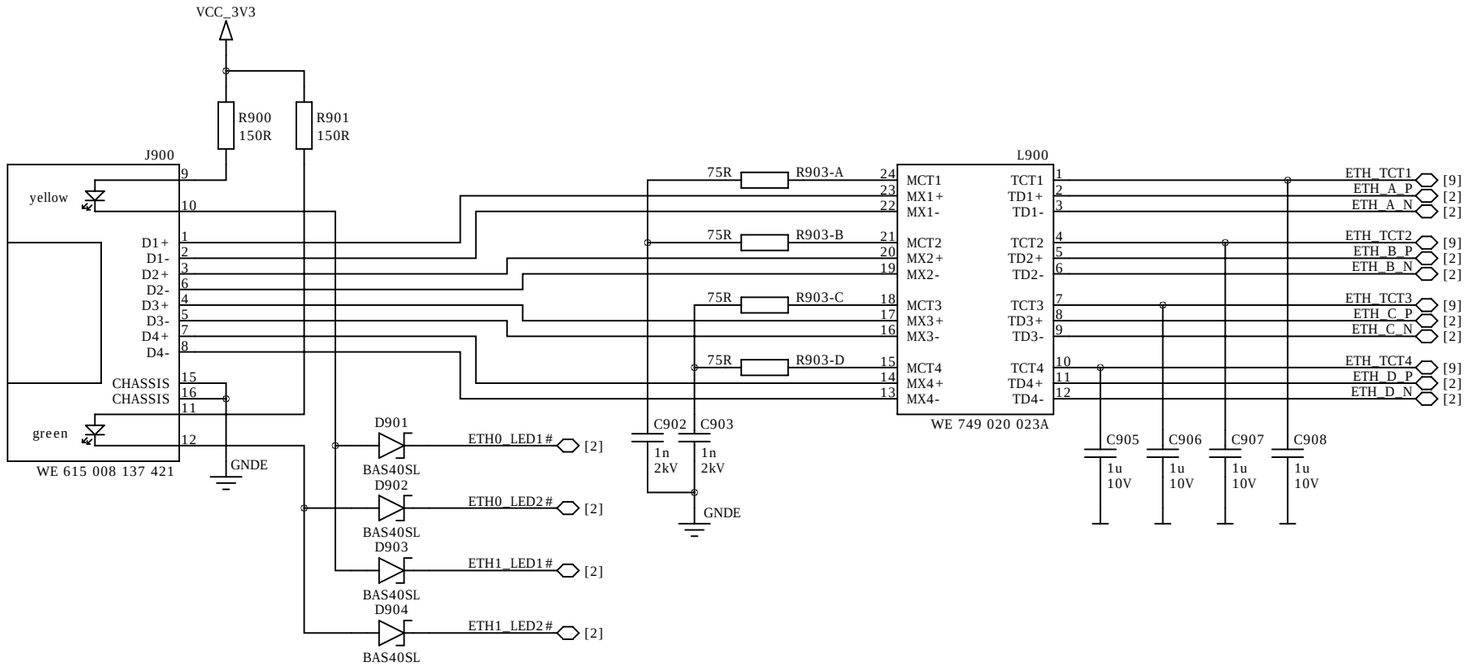

Magnetics Center Tap

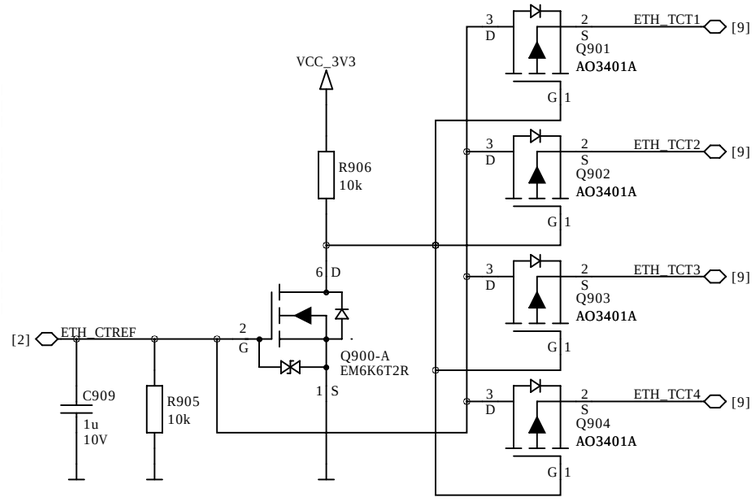

Reset Circuit

D900, C901 only needed when not using System Controller.

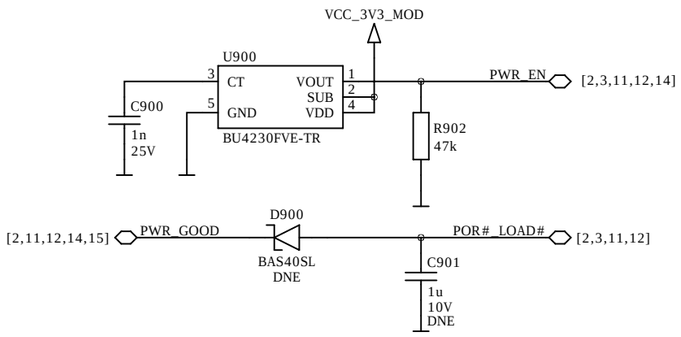

Battery Holder

optional

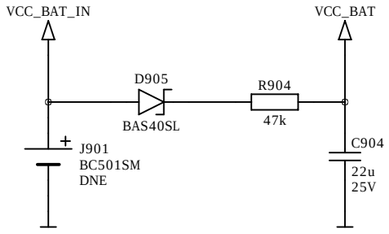

Battery

optional

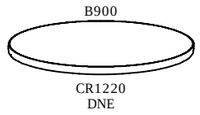

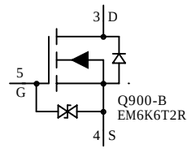

ENCLUSTRA	Copyright © 2021 by Enclustra GmbH	Sheet Name 9_ETHERNET_BATTERY_RESET	Customer No 0000	Revision R2.5	DNE = do not equip	Confidential
	Company Enclustra GmbH	Project Mars EB1	Project No 307	Designed MHEI	Date 20 Apr 2021	Sheet/sheets 9 / 16

HDMI Interface

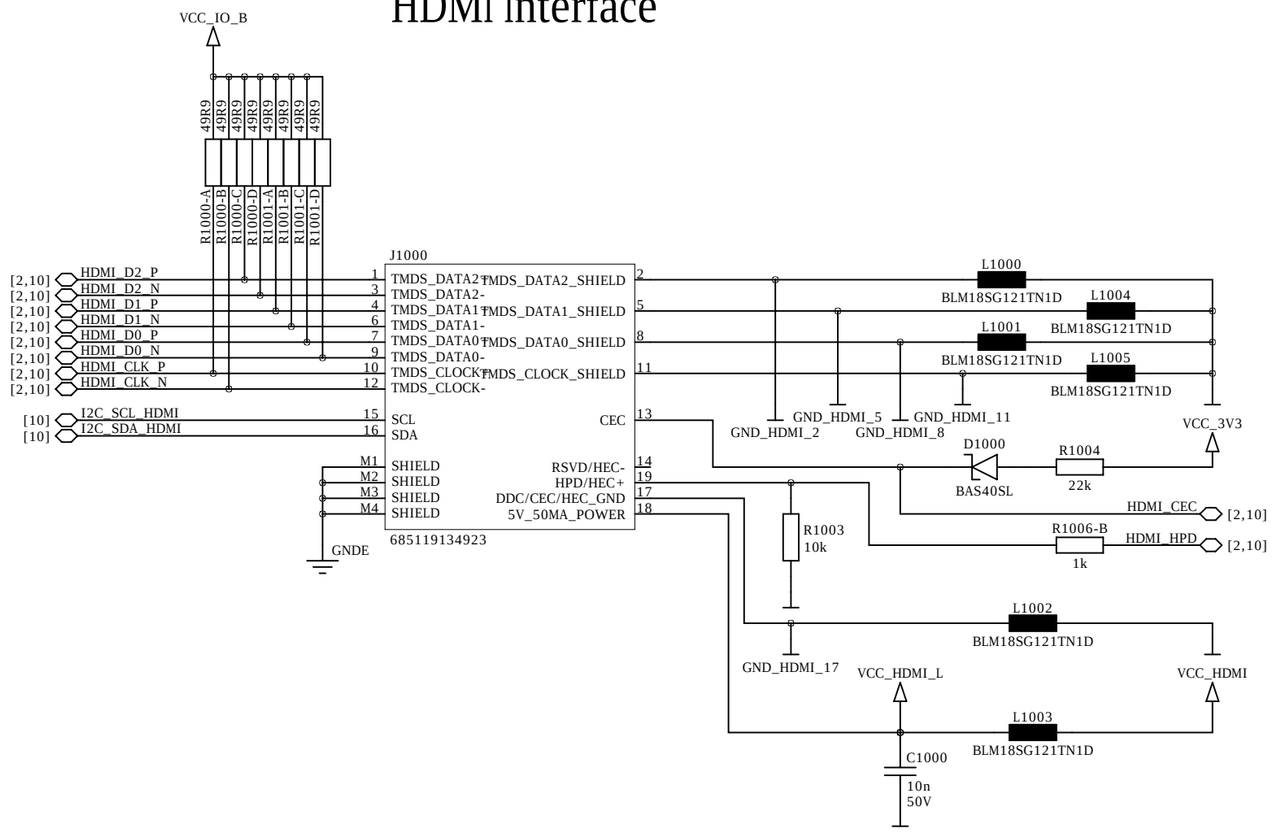

HDMI ESD Protection

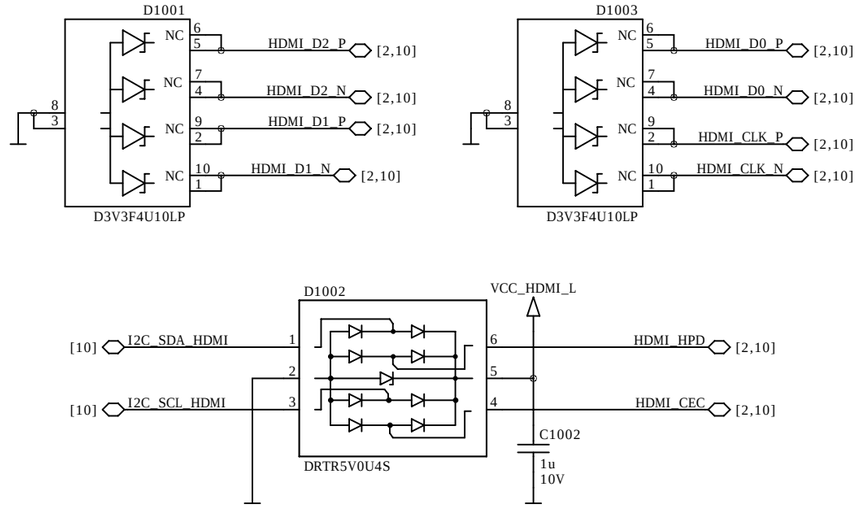

HDMI I2C Bus

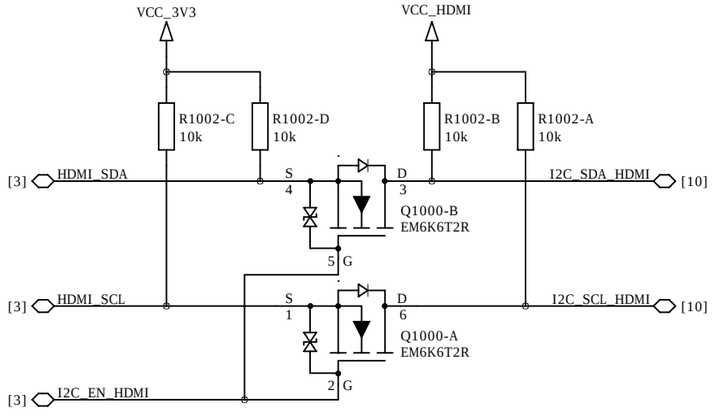

HDMI Power Switch

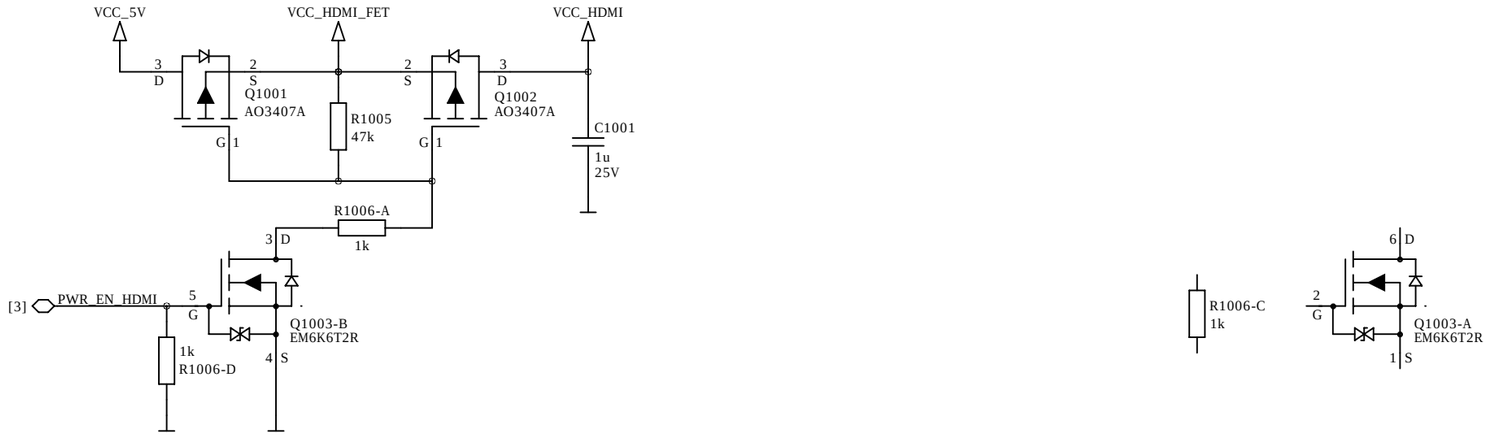

ENCLUSTRA	Copyright © 2021 by Enclustra GmbH	Sheet Name 10_HDMI	Customer No 0000	Revision R2.5	DNE = do not equip	Confidential
	Company Enclustra GmbH	Project Mars EB1	Project No 307	Designed MHEI	Date 20 Apr 2021	Sheet/sheets 10 / 16

PMOD IO Connector C

This connector is Digilent Pmod™ Compatible when VCC_IO_A is 3.3V.

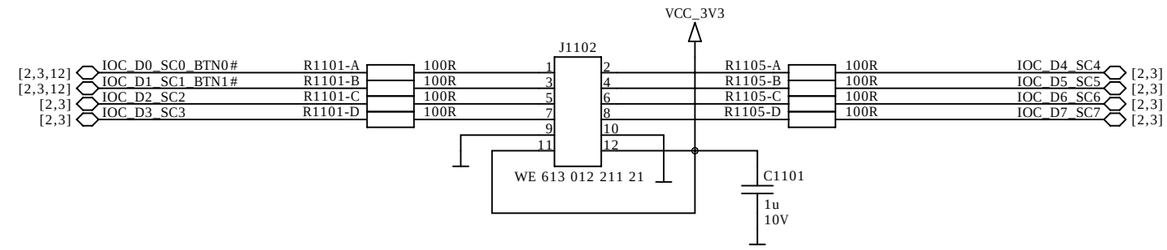

Control Connector

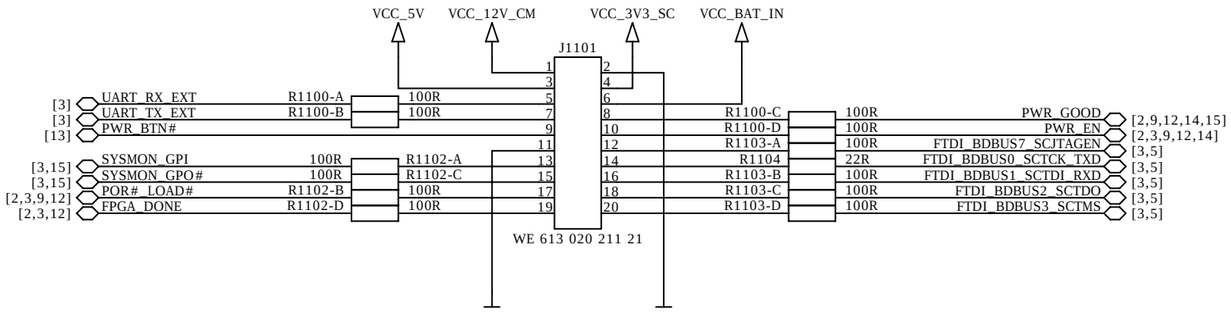

JTAG Connector

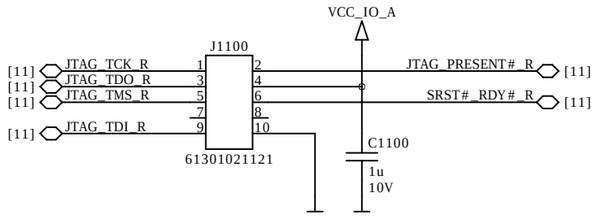

JTAG ESD Protection

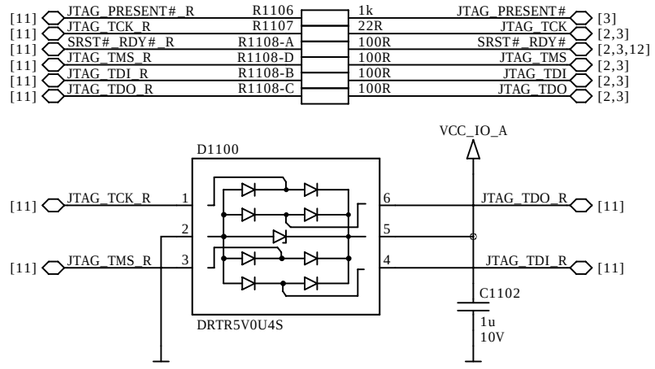

Anios IO Connector A

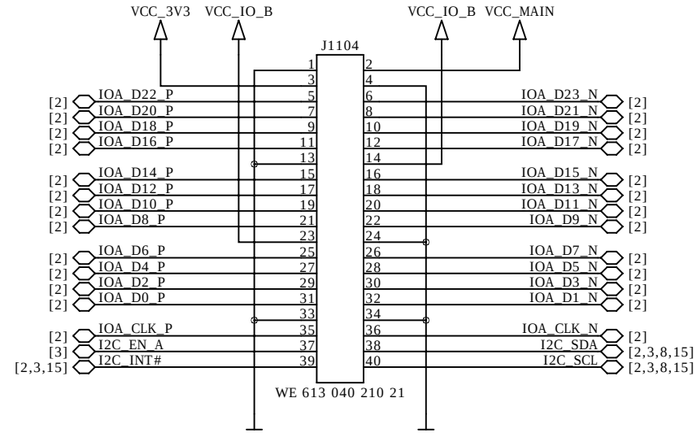

PMOD IO Connector B

This connector is Digilent Pmod™ Compatible when VCC_IO_B is 3.3V.

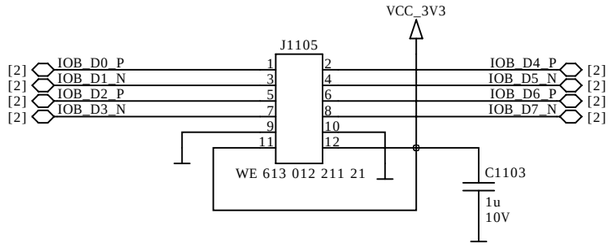

IO Connector D

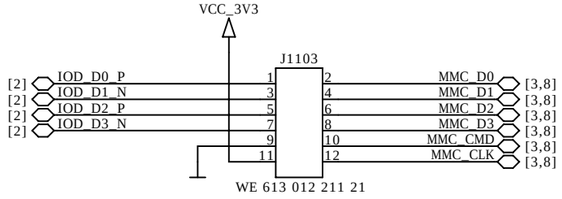

ENCLUSTRA	Copyright © 2021 by Enclustra GmbH	Sheet Name 11_ANIOS_PMOD_CONTROL_JTAG	Customer No 0000	Revision R2.5	DNE = do not equip	Confidential
	Company Enclustra GmbH	Project Mars EB1	Project No 307	Designed MHEI	Date 20 Apr 2021	Sheet/sheets 11 / 16

Done LED

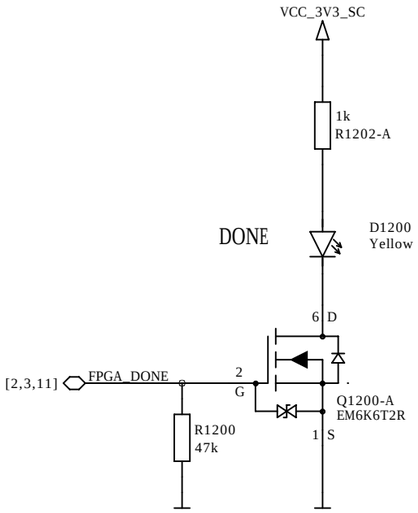

Power Good LED

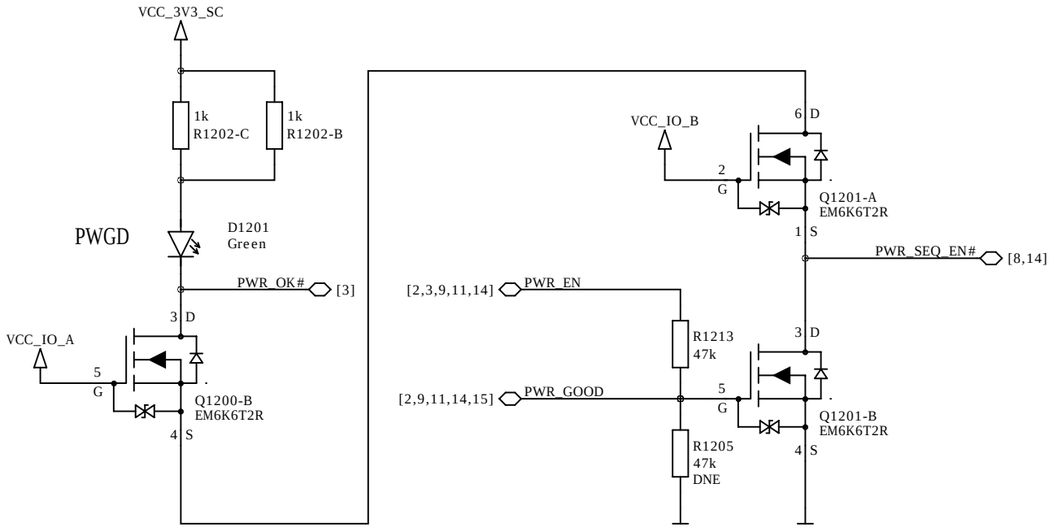

System Controller LEDs

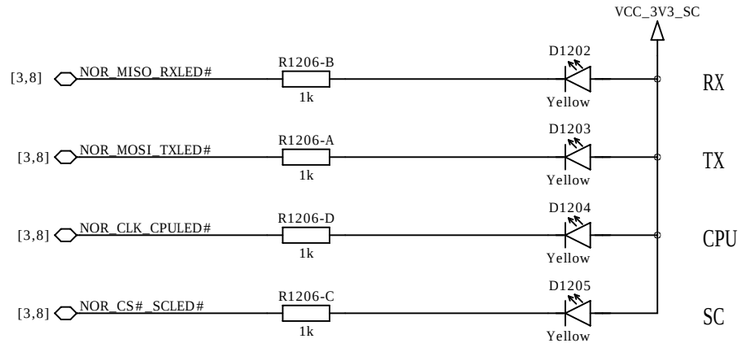

IO Voltage Select

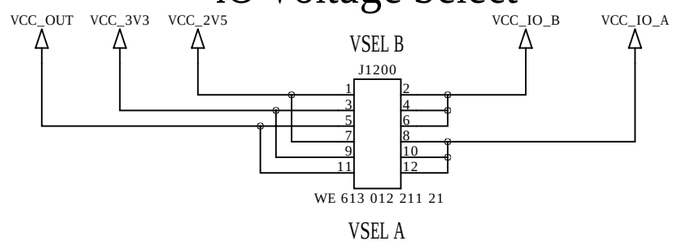

Default Jumpers: 2-4, 10-12

The jumpers need to be set correctly for the users application respecting the modules supported IO voltage ranges.

Board Configuration

CFG A

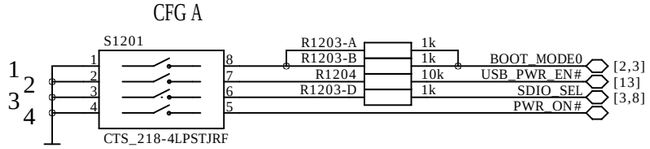

Default: 1 closed, 2-3 open, 4 closed

CFG B

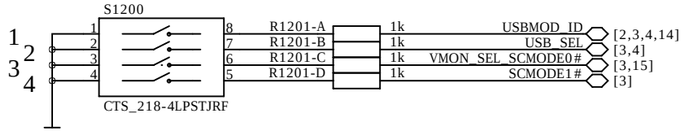

Default: 1 closed, 2-4 open

Reset Buttons

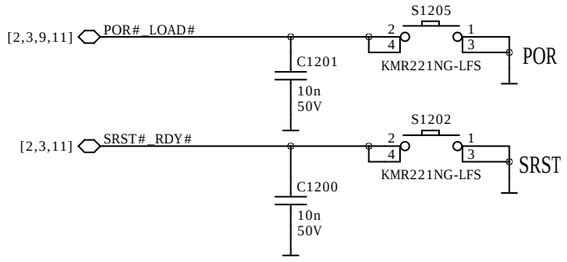

User Buttons

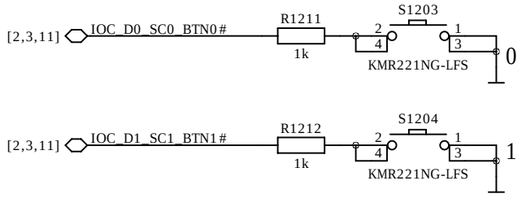

Hardware Identification

HWID = 0 0 1 0

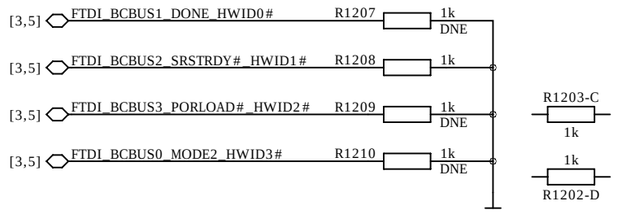

External Power Input

12V 2.5A

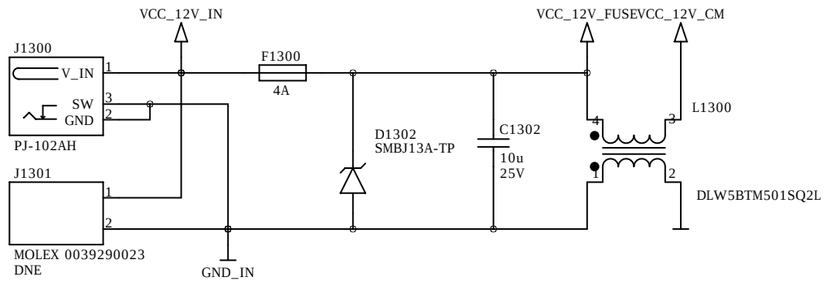

Power Input Control

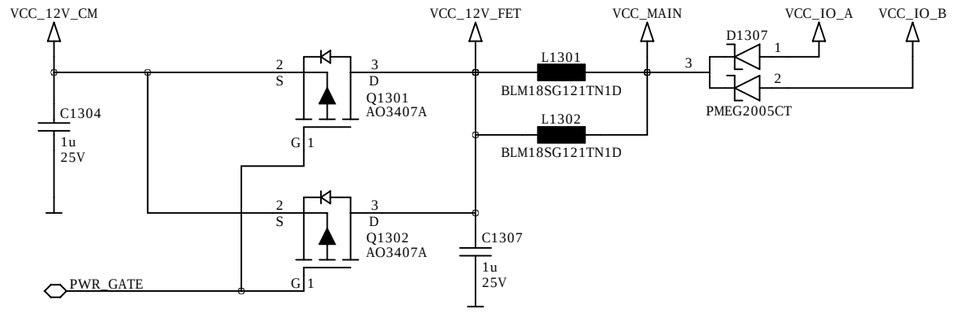

Fan / Power Input Connector

internal power input 12V 3A

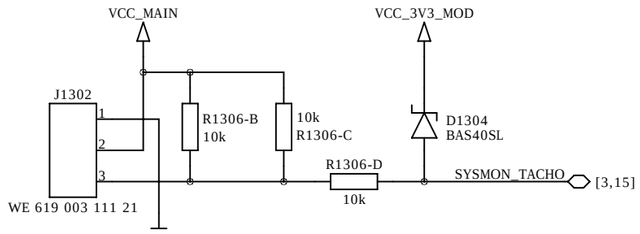

Power Switch Control

not included in user schematics

This part is intentionally left blank.

USB Power Input Control

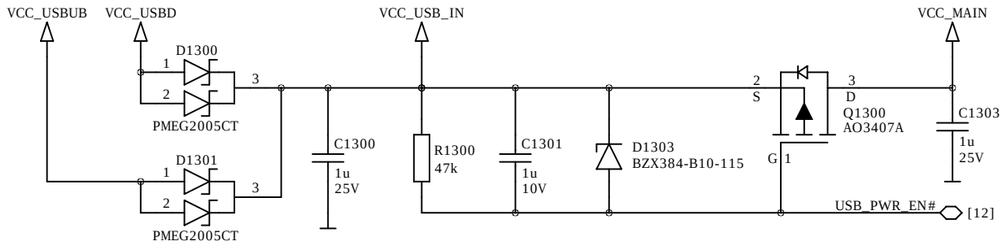

Power Button

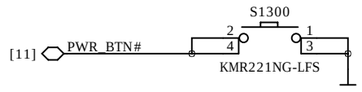

ENCLUSTRA	Copyright © 2021 by Enclustra GmbH	Sheet Name 13_POWER_INPUT_CONTROL	Customer No 0000	Revision R2.5	DNE = do not equip	Confidential
	Company Enclustra GmbH	Project Mars EB1	Project No 307	Designed MHEI	Date 20 Apr 2021	Sheet/sheets 13 / 16

Step-Down Converter 12V to 5V 3A

Vfb = 0.8V fs = 500kHz

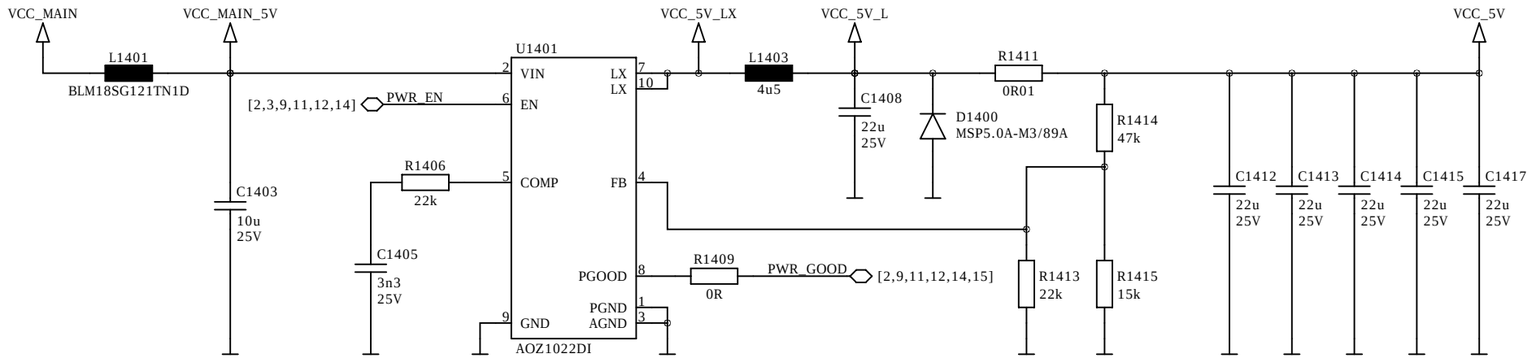

Do not touch feedback and compensation networks during operation!

Step-Down Converter 12V to 3.3V 3A

Vfb = 0.8V fs = 500kHz

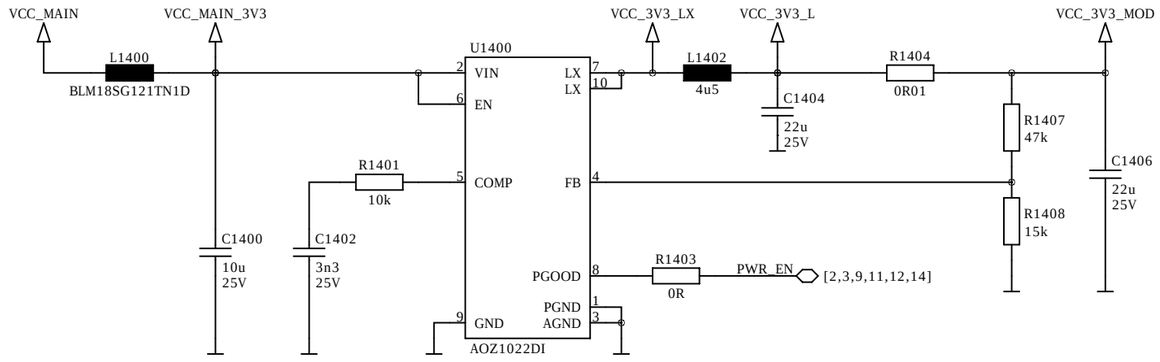

Step-Down Converter 12V to 2.5V 3A

Vfb = 0.8V fs = 500kHz

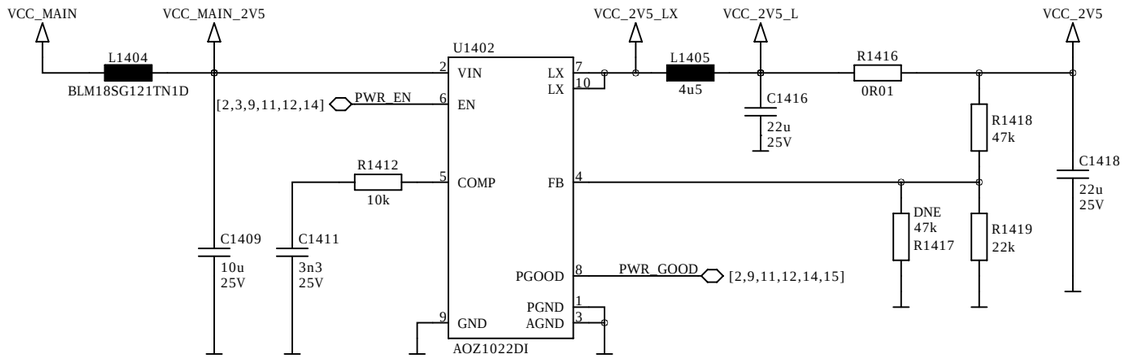

Power Sequencing

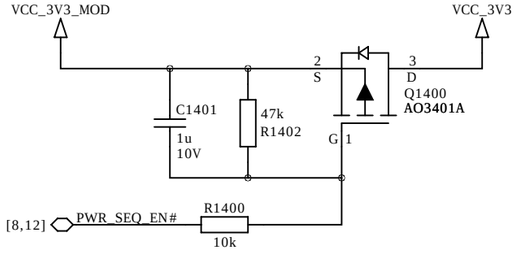

USB VBUS Control

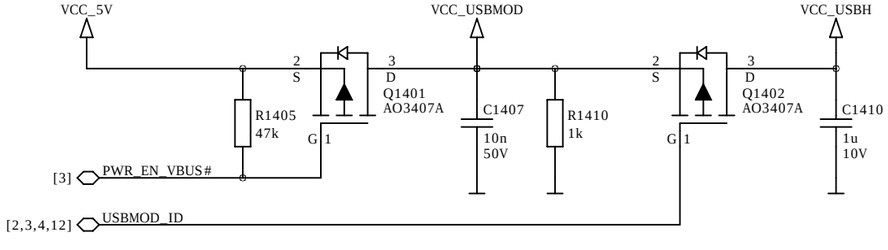

ENCLUSTRA	Copyright © 2021 by Enclustra GmbH	Sheet Name 14_POWER_SUPPLY	Customer No 0000	Revision R2.5	DNE = do not equip	Confidential
	Company Enclustra GmbH	Project Mars EB1	Project No 307	Designed MHEI	Date 20 Apr 2021	Sheet/sheets 14 / 16

System Monitor

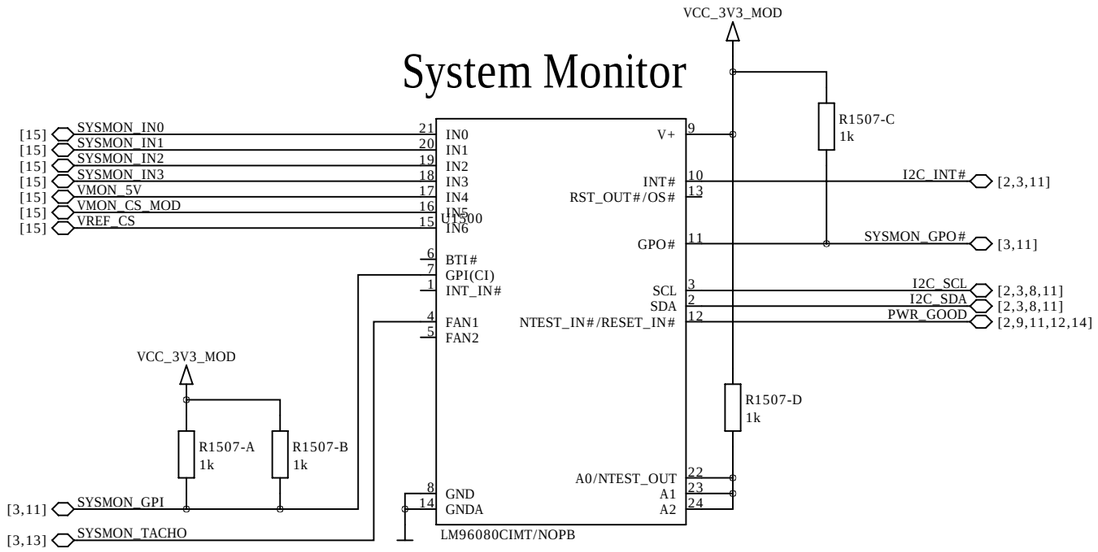

I2C Address: 0 1 0 1 1 1 1 Rw

Power Decoupling

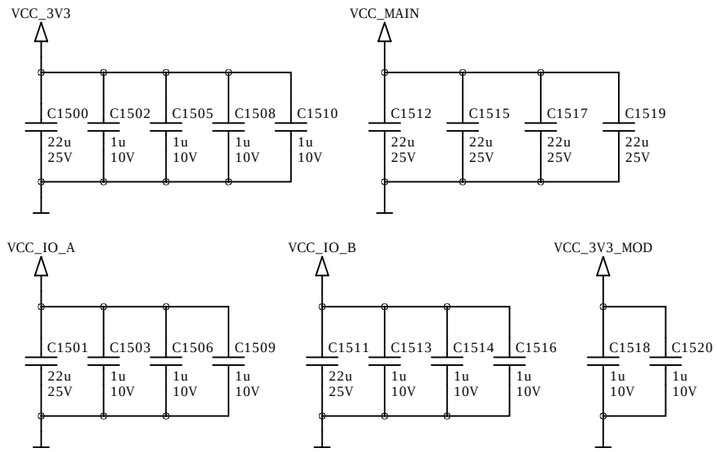

Voltage Sense

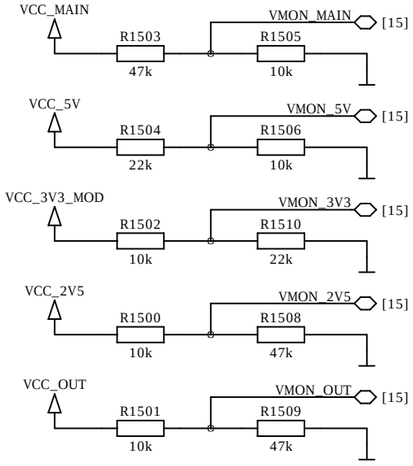

System Monitor Multiplexers

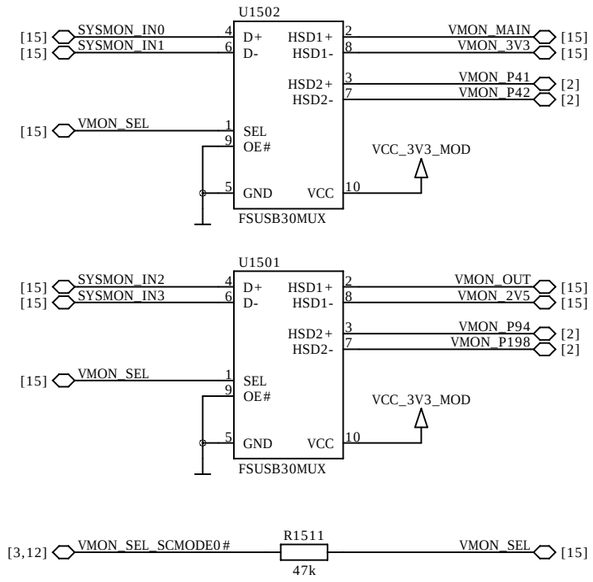

Current Sense

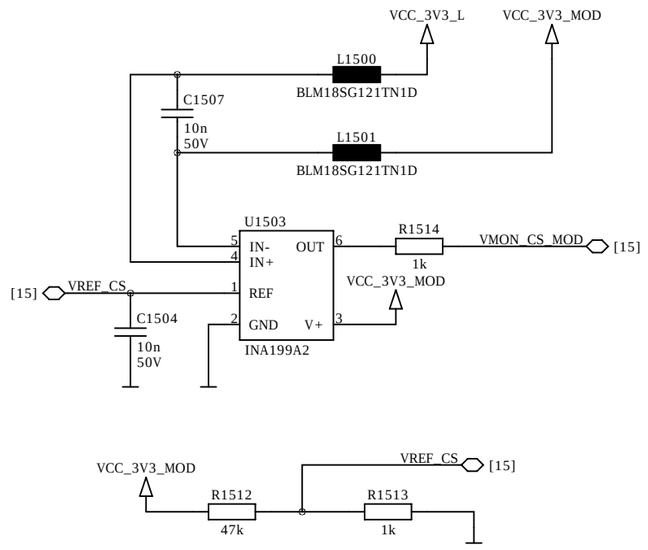

Board Mounting Holes M3

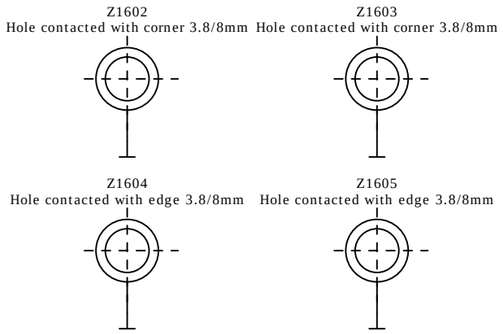

Fiducials

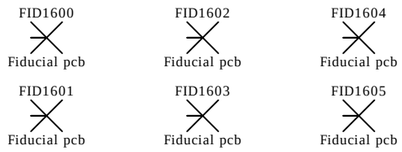

Chassis Ground

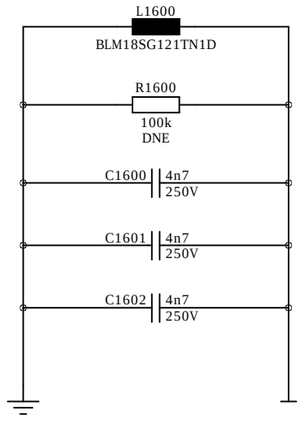

Ground Test Points

PCB

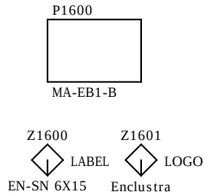

Connector Pin-1 Marking

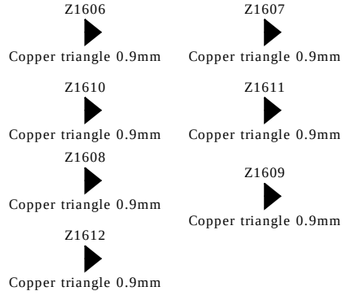

Assembly Variant

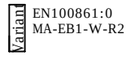

Module Screw Mounting

optional

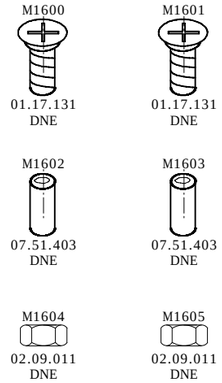

Board Spacers

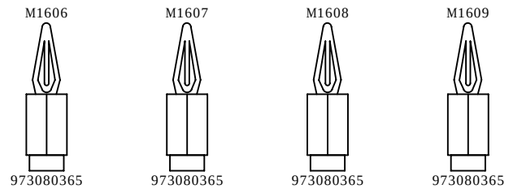

ENCLUSTRA	Copyright © 2021 by Enclustra GmbH	Sheet Name 16_MECHANICS	Customer No 0000	Revision R2.5	DNE = do not equip	Confidential
	Company Enclustra GmbH	Project Mars EB1	Project No 307	Designed MHEI	Date 20 Apr 2021	Sheet/sheets 16 / 16