Mars PM3 Base Board

Revision 5.2

Sheet 1: Cover
Sheet 2: Mars Module Connector
Sheet 3: USB 3.0 Device Controller
Sheet 4: USB 3.0 Power / USB 2.0 UART
Sheet 5: USB Connectors
Sheet 6: USB 3.0 Peripherals / Multiplexers
Sheet 7: Ethernet
Sheet 8: JTAG / Micro SD-Card
Sheet 9: System Monitor / EEPROM
Sheet 10: Mini HDMI / PCI Express / LVDS Connector
Sheet 11: FMC LPC / I/O Connector
Sheet 12: User Interface / Board Configuration
Sheet 13: Power Input / Battery / Fan
Sheet 14: Power 5V / 1.2V
Sheet 15: Power 3.3V / IO Voltage
Sheet 16: Mechanics
Sheet 17: Assembly Variants

Mars SO-DIMM Connector

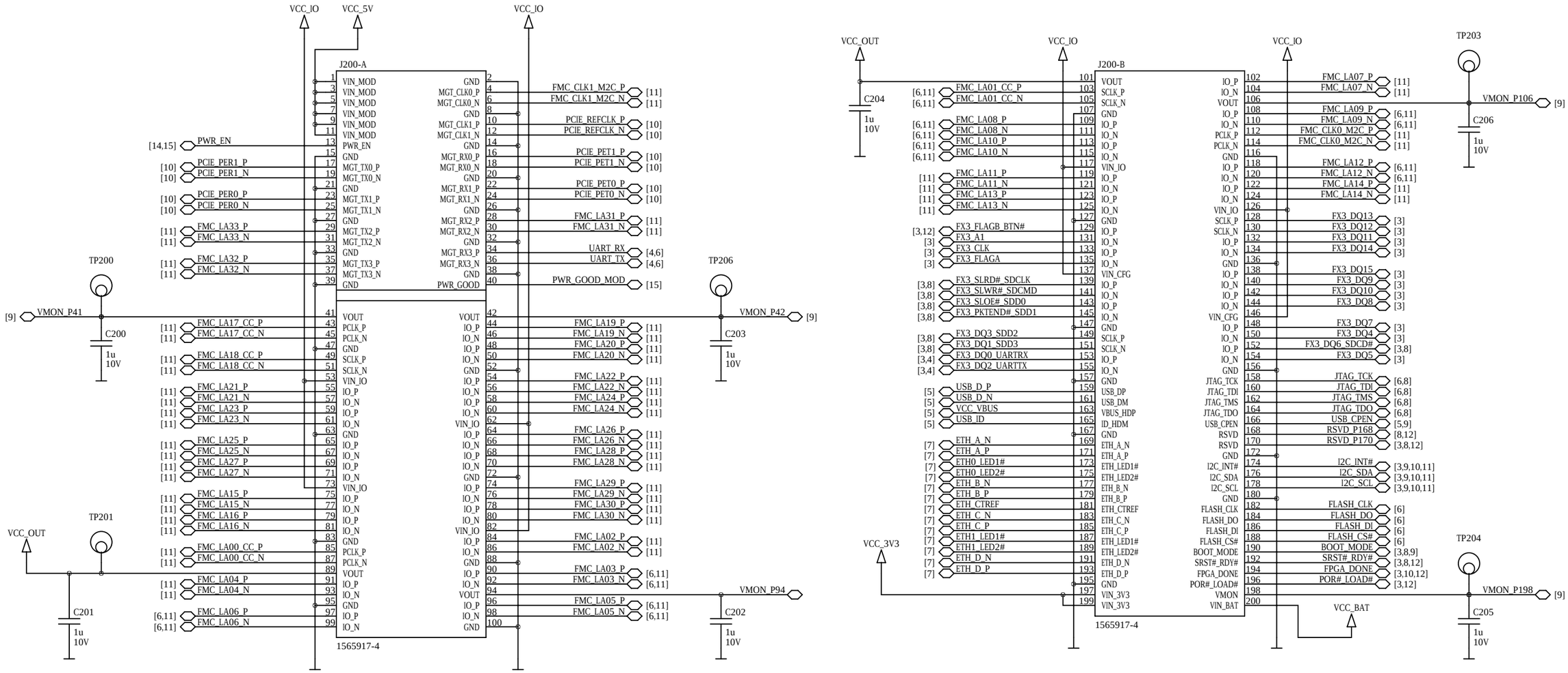

ENCLUSTRA	Copyright	© 2018 by Enclustra GmbH	Sheet Name	2_MODULE_CONNECTOR	Customer No 0000	Revision R5.2	DNE = do not equip	Confidential
	Company	Enclustra FPGA Solutions	Project	Mars PM3	Project No 413	Designed MHEI	Date 29 Oct 2018	Sheet/sheets 2 / 17

FX3 SPI Multiplexers

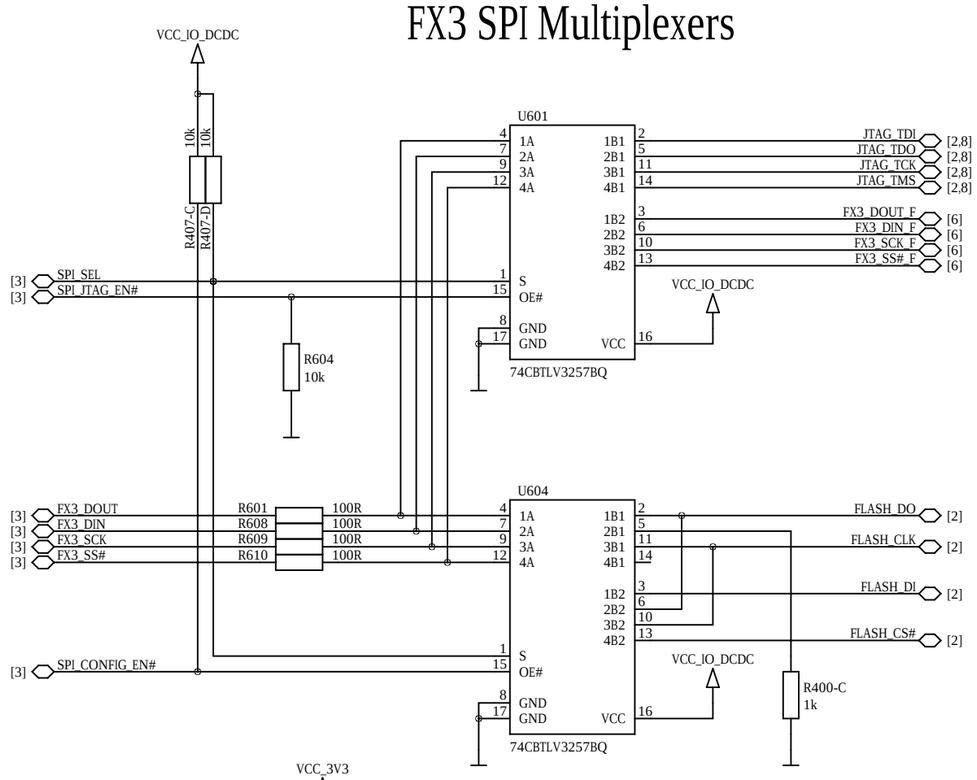

FX3 SPI Flash

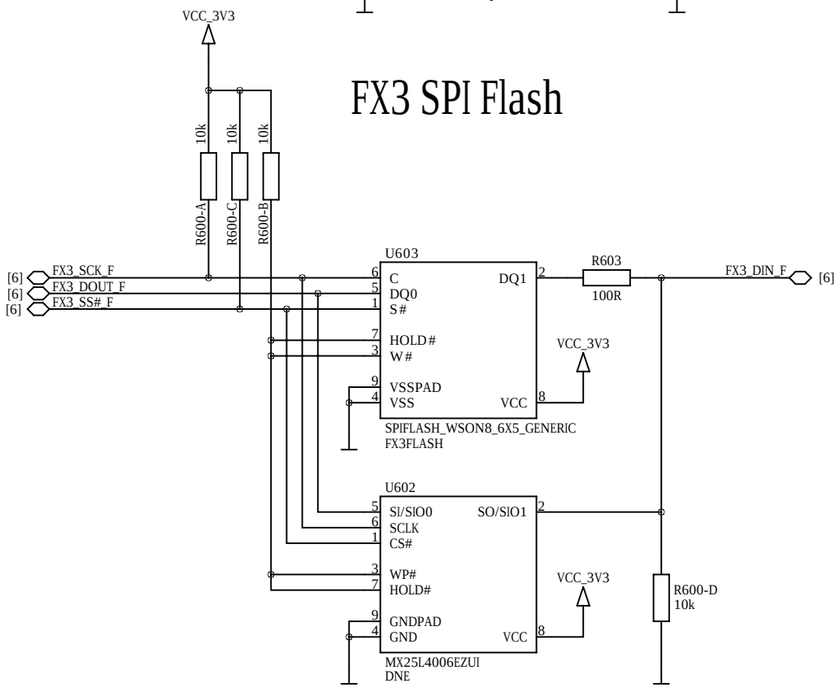

FX3 DQ Multiplexers

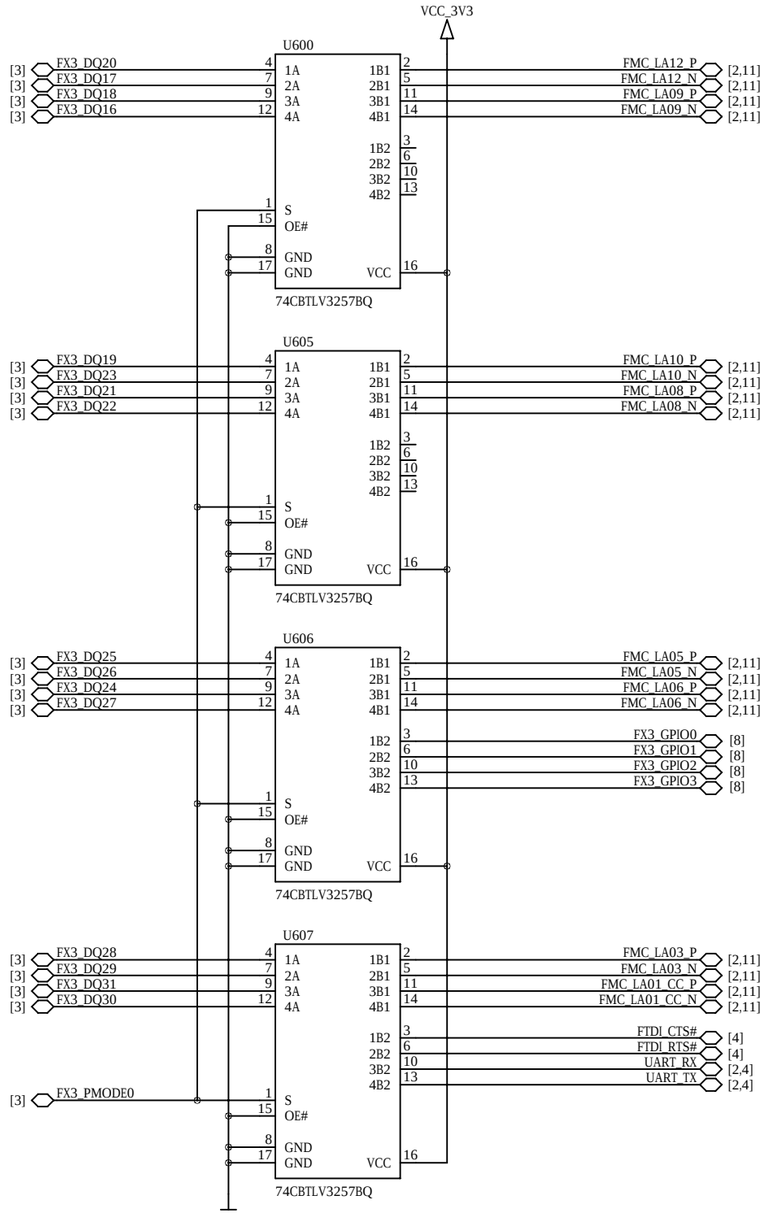

ENCLUSTRA	Copyright	© 2018 by Enclustra GmbH	Sheet Name	6_USB3_PERIPHERALS	Customer No 0000	Revision R5.2	DNE = do not equip	Confidential
	Company	Enclustra FPGA Solutions	Project	Mars PM3	Project No 413	Designed MHEI	Date 29 Oct 2018	Sheet/sheets 6 / 17

FMC LPC Connector

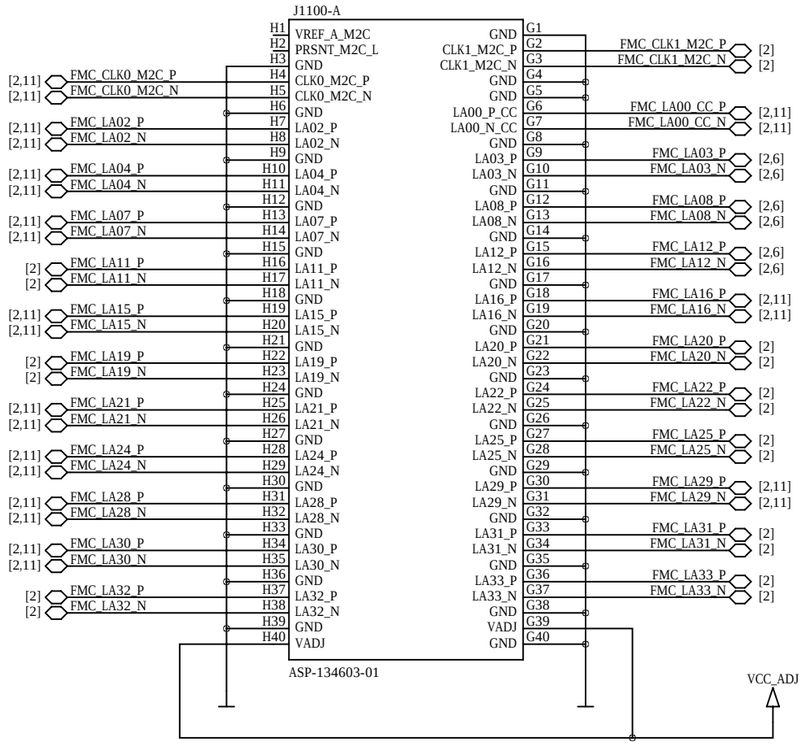

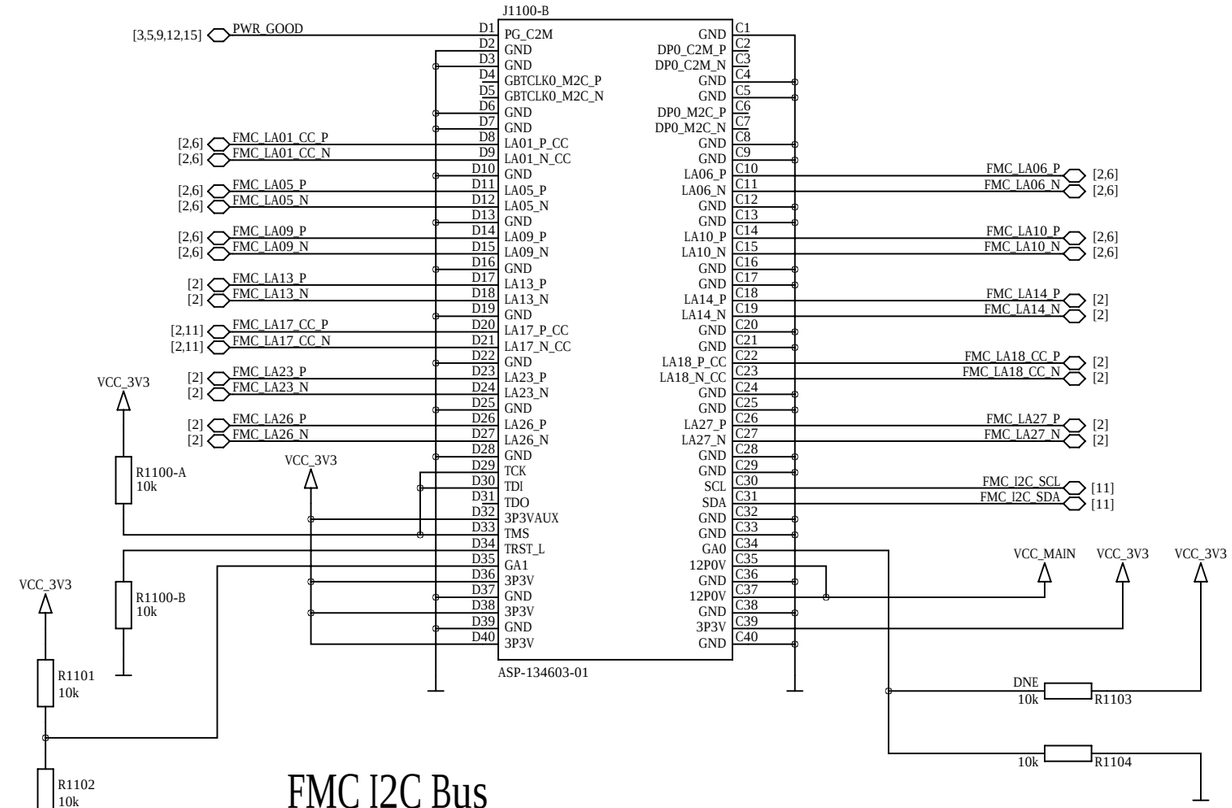

IO Connector

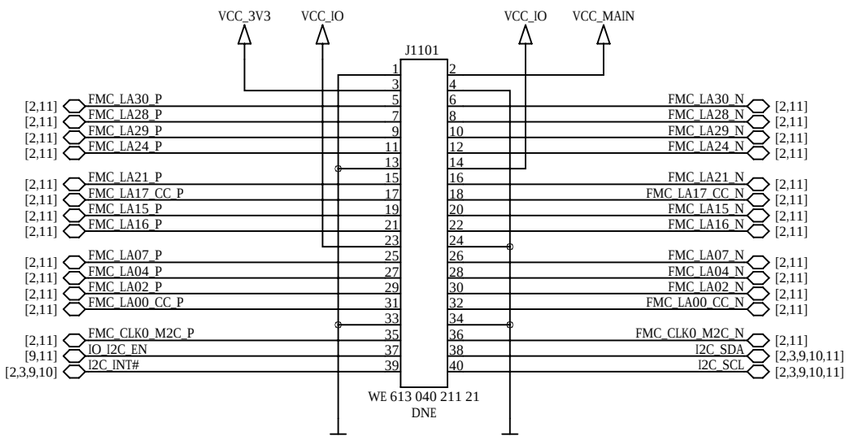

FMC I2C Bus

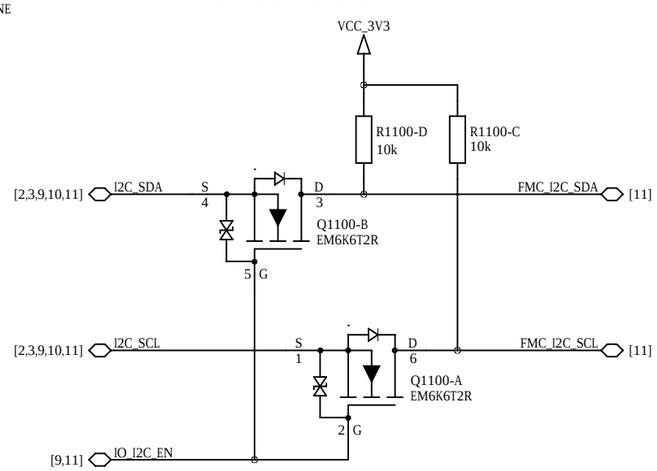

FMC Power

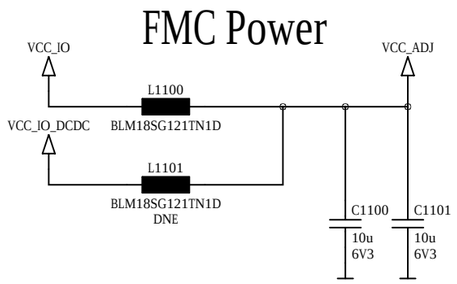

ENCLUSTRA	Copyright © 2018 by Enclustra GmbH	Sheet Name 11_I/O_CONNECTORS	Customer No 0000	Revision R5.2	DNE = do not equip	Confidential
	Company Enclustra FPGA Solutions	Project Mars PM3	Project No 413	Designed MHEI	Date 29 Oct 2018	Sheet/sheets 11 / 17