Enclustra User Schematics

Mars PM3 Revision 5.2

Disclaimer

User schematics do not include proprietary Enclustra design elements, such as power supply circuits.
These circuits use optimized designs which are extremely compact and remain proprietary to Enclustra.
The user manual provides all necessary information to use the module and its interfaces.

User schematics are provided after purchase of Enclustra hardware, and may also be provided in certain cases before purchase, to assist in product evaluation.
No part of the schematics may be copied or modified without written permission from Enclustra.

Full schematics, including a full bill-of-materials, may be available through the purchase of a hardware licence for the product in question.
Please contact Enclustra Sales for more information.

Note: DNE = Do Not Equip (parts not equipped by default)

© Enclustra GmbH

Mars PM3 Base Board

Revision 5.2

Sheet 1: Cover
Sheet 2: Mars Module Connector
Sheet 3: USB 3.0 Device Controller
Sheet 4: USB 3.0 Power / USB 2.0 UART
Sheet 5: USB Connectors
Sheet 6: USB 3.0 Peripherals / Multiplexers
Sheet 7: Ethernet
Sheet 8: JTAG / Micro SD-Card
Sheet 9: System Monitor / EEPROM
Sheet 10: Mini HDMI / PCI Express / LVDS Connector
Sheet 11: FMC LPC / I/O Connector
Sheet 12: User Interface / Board Configuration
Sheet 13: Power Input / Battery / Fan
Sheet 14: Power 5V / 1.2V
Sheet 15: Power 3.3V / IO Voltage
Sheet 16: Mechanics
Sheet 17: Assembly Variants

Mars SO-DIMM Connector

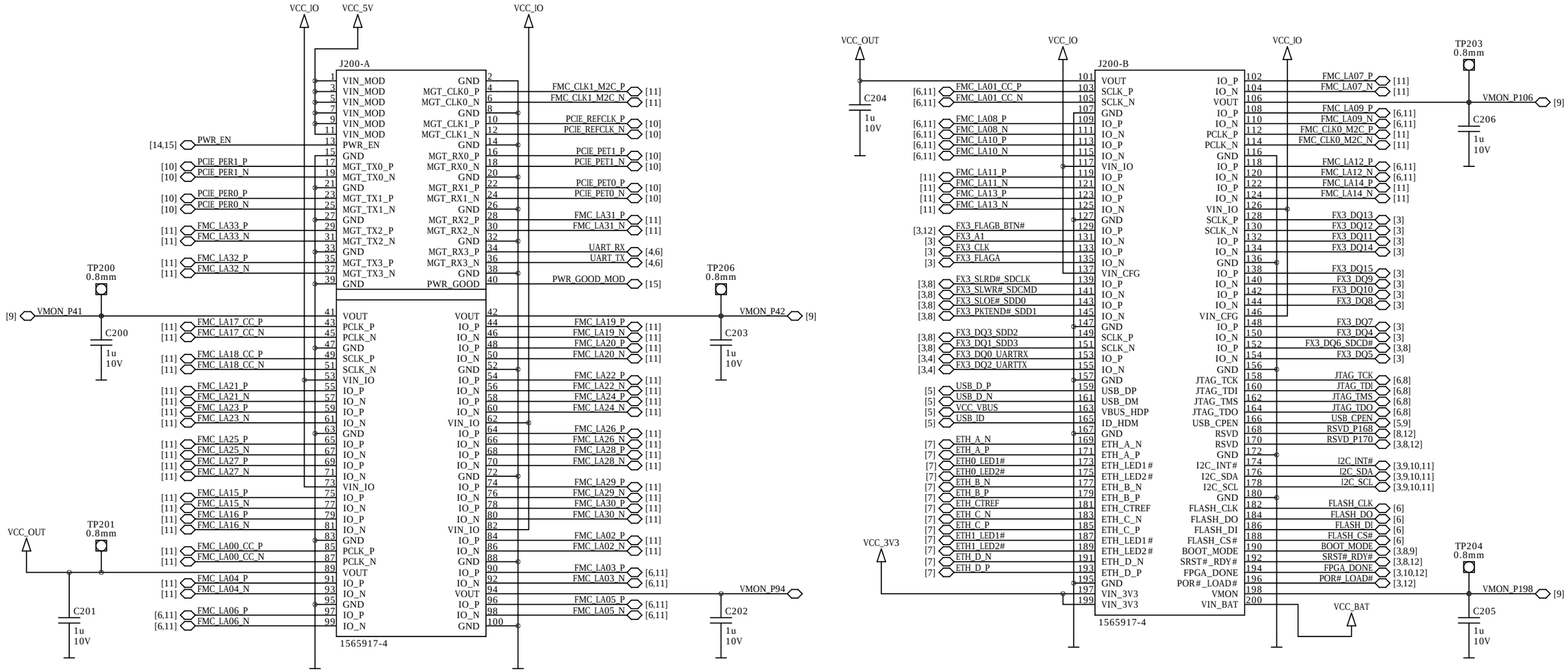

ENCLUSTRA	Copyright © 2021 by Enclustra GmbH	Sheet Name 2_MODULE_CONNECTOR	Customer No 0000	Revision R5.2	DNE = do not equip	Confidential
	Company Enclustra FPGA Solutions	Project Mars PM3	Project No 413	Designed MHEI	Date 13 Apr 2021	Sheet/sheets 2 / 17

USB 3.0 Device Controller (Cypress FX3)

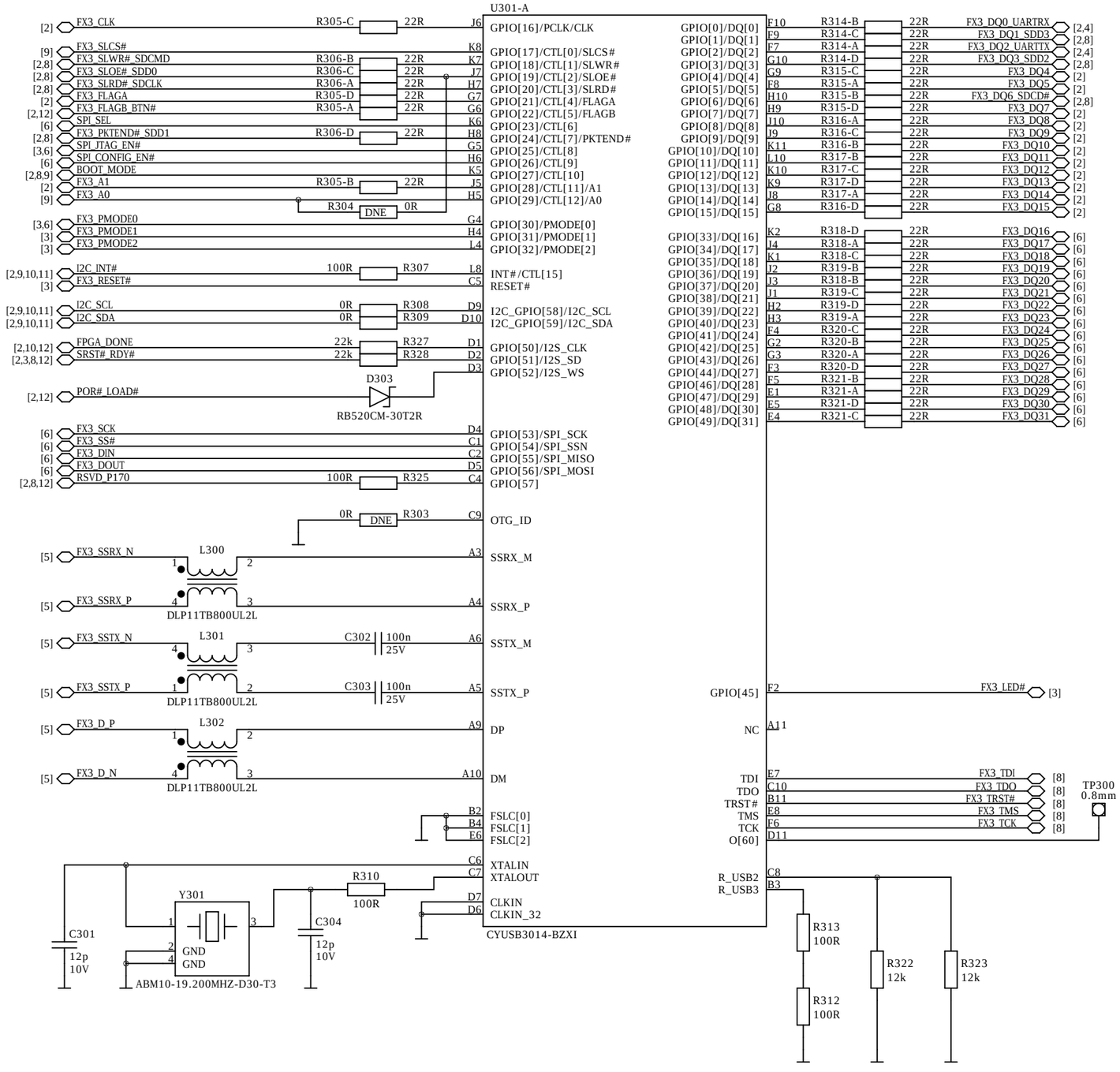

FX3 LED

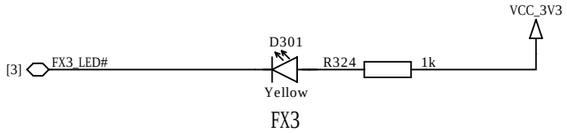

FX3 Boot Mode

SPI boot mode enabled with USB fall back

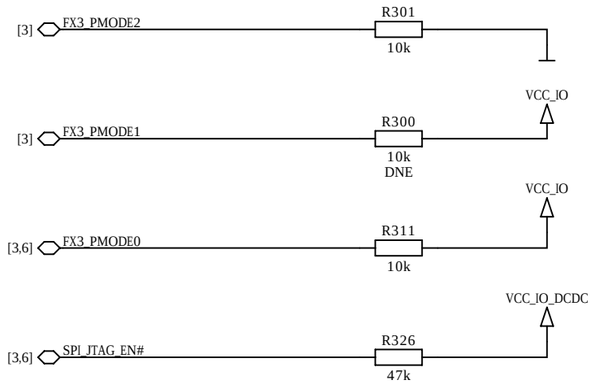

Short circuit R326 to force USB boot.

FX3 SRST Control

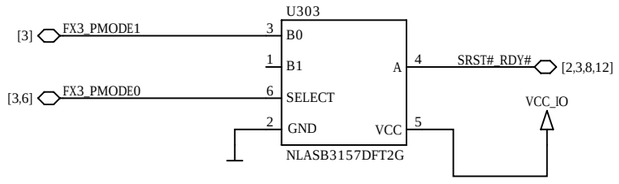

FX3 Reset

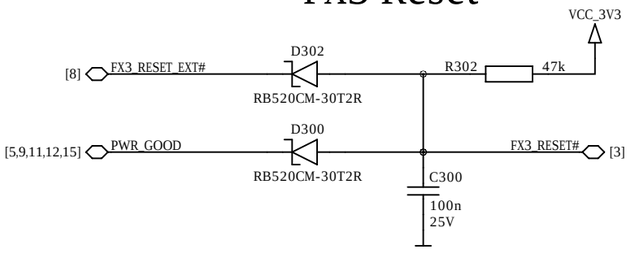

ENCLUSTRA	Copyright	© 2021 by Enclustra GmbH	Sheet Name	3_USB3_CONTROLLER	Customer No	0000	Revision	R5.2	DNE = do not equip	Confidential
	Company	Enclustra FPGA Solutions	Project	Mars PM3	Project No	413	Designed	MHEI	Date 13 Apr 2021	Sheet/sheets 3 / 17

USB 3.0 Device Controller Power

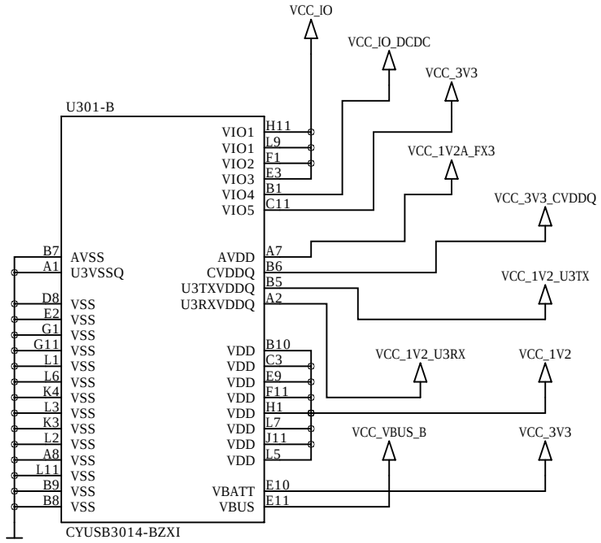

VIO1: GPIO[0..32], INT#
VIO2: GPIO[33..45]
VIO3: GPIO[46..52]
VIO4: GPIO[53..57] (SPI)
VIO5: GPIO[58..59] (I2C), JTAG

FTDI USB UART Device

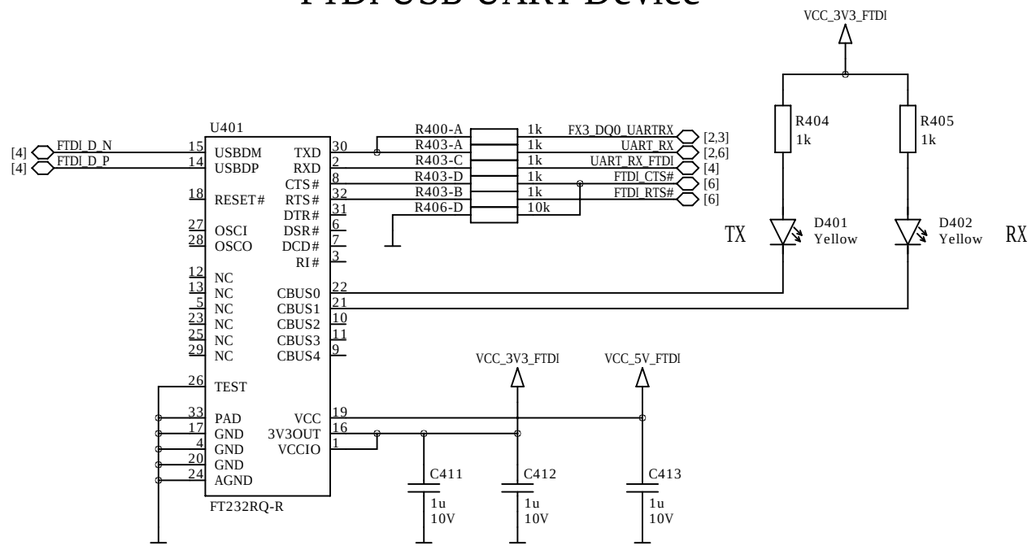

FTDI USB Connector

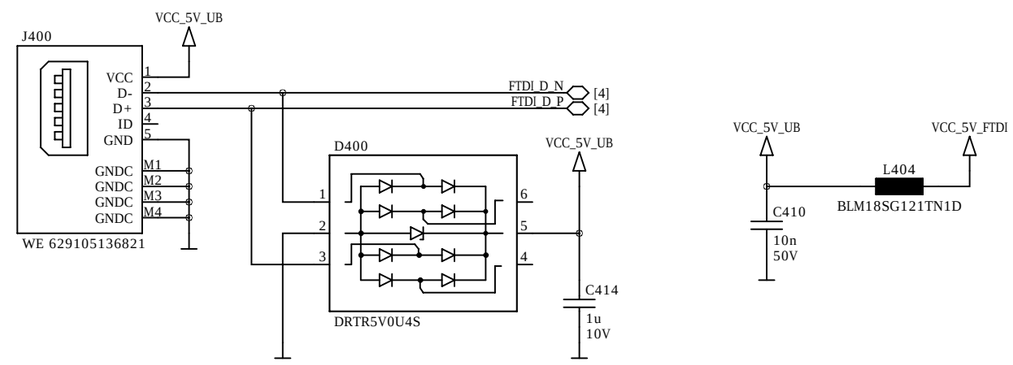

FX3 Power Filters

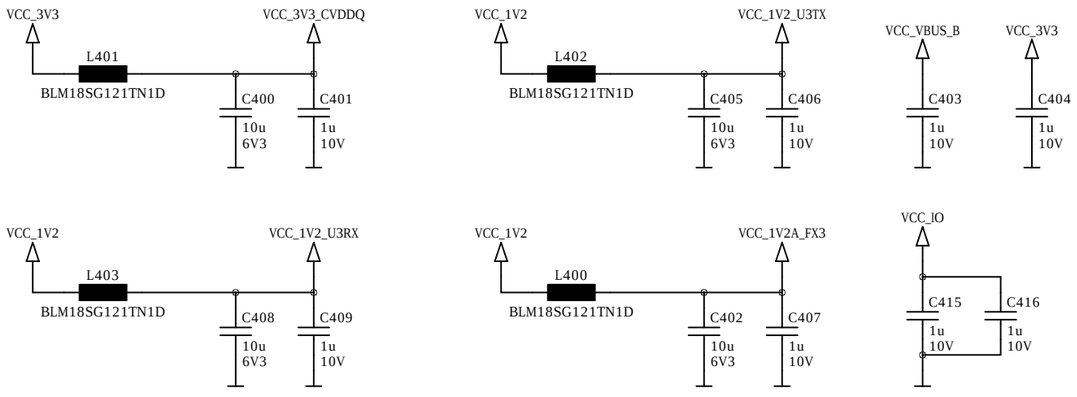

USB UART Multiplexer

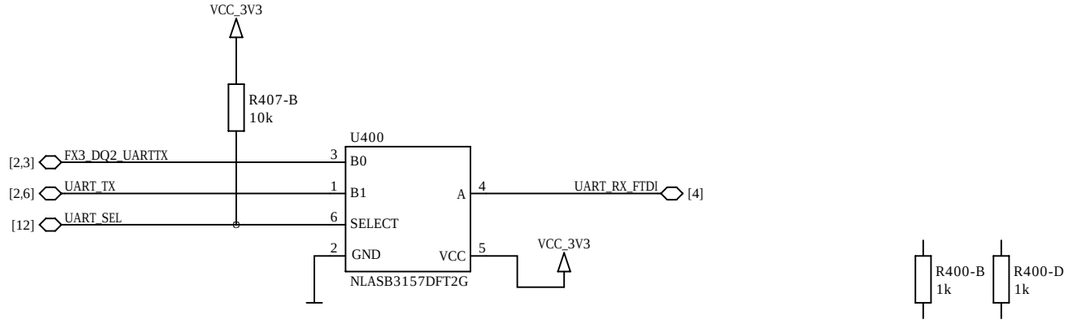

ENCLUSTRA	Copyright © 2021 by Enclustra GmbH	Sheet Name 4_USB3_POWER_USB_UART	Customer No 0000	Revision R5.2	DNE = do not equip	Confidential	
	Company Enclustra FPGA Solutions	Project Mars PM3	Project No 413	Designed MHEI	Date 13 Apr 2021	Sheet/sheets 4 / 17	

USB Multiplexer

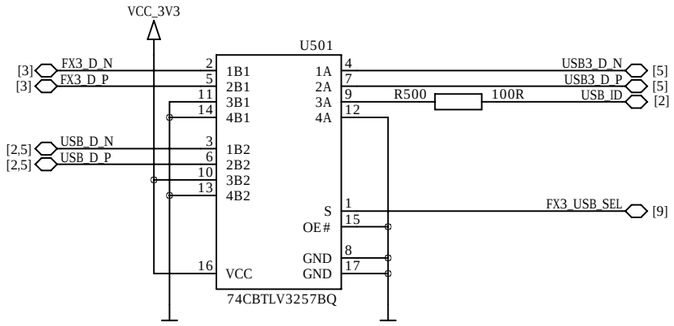

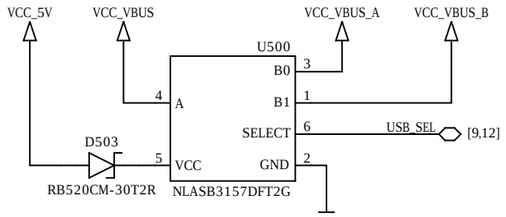

USB / HDMI Load Switch

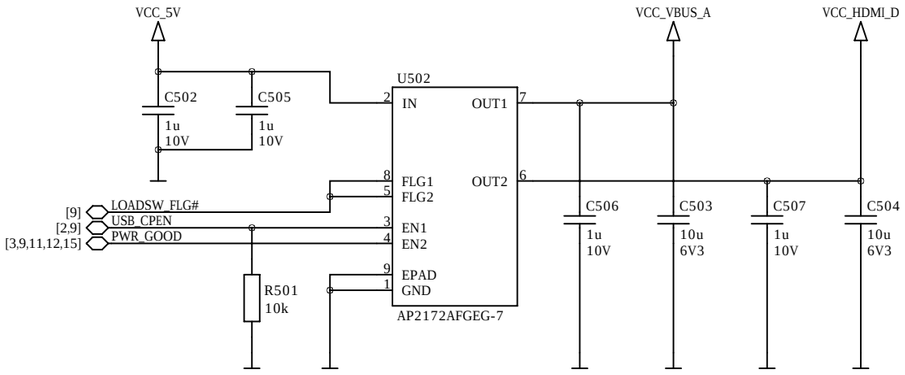

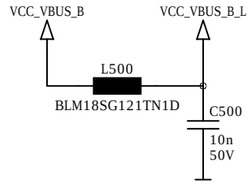

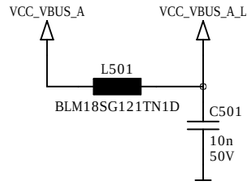

USB 3.0 Device Connector

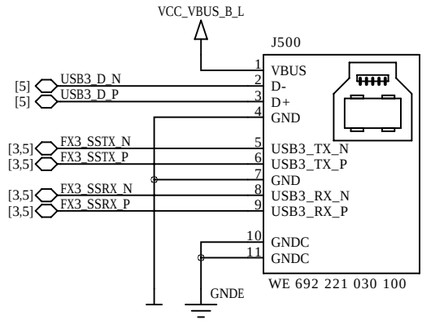

USB 2.0 Host Connector

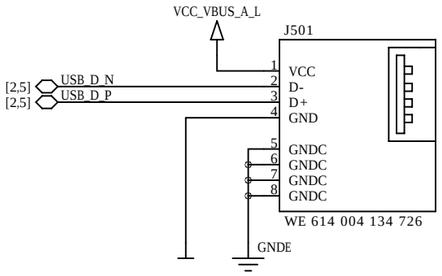

ESD Protection

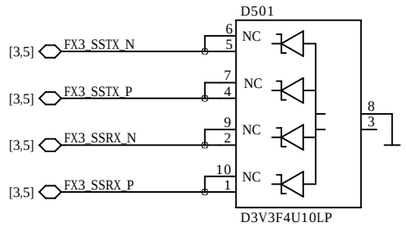

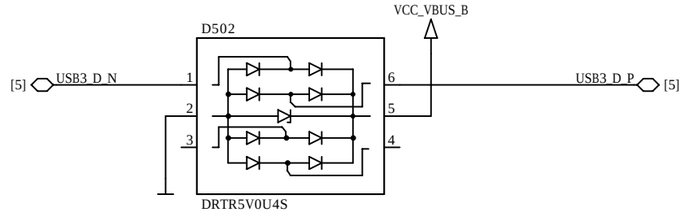

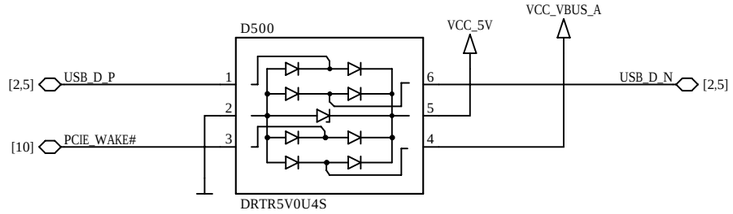

ENCLUSTRA	Copyright	© 2021 by Enclustra GmbH	Sheet Name	5_USB_CONNECTORS	Customer No	0000	Revision	R5.2	DNE = do not equip	Confidential
	Company	Enclustra FPGA Solutions	Project	Mars PM3	Project No	413	Designed	MHEI	Date 13 Apr 2021	Sheet/sheets 5 / 17

FX3 SPI Multiplexers

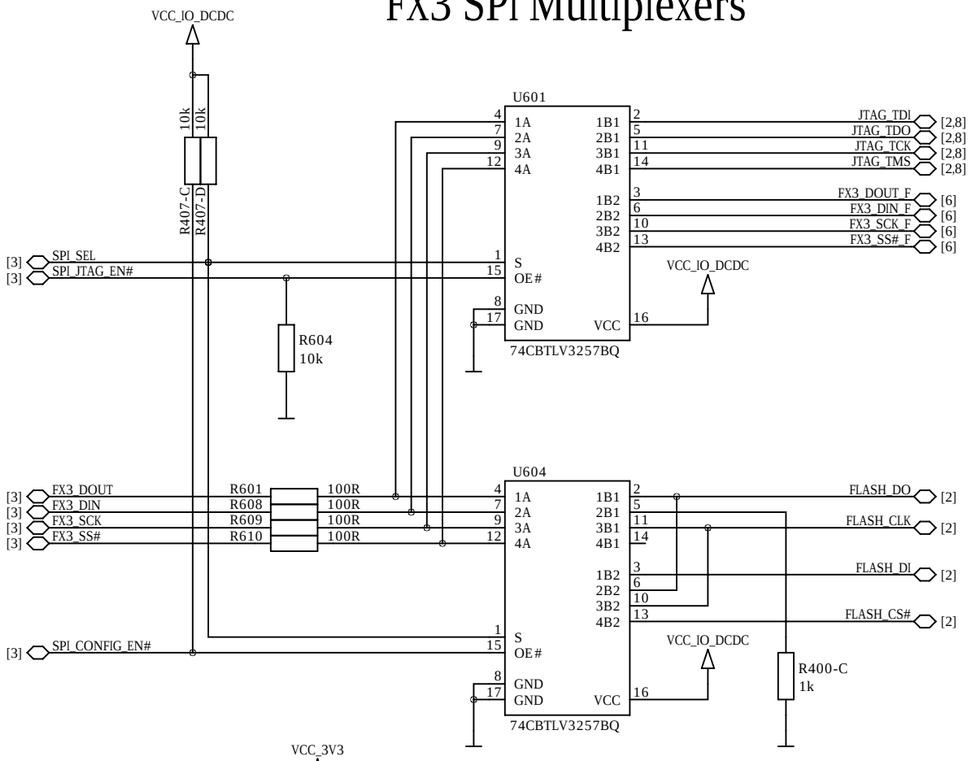

FX3 SPI Flash

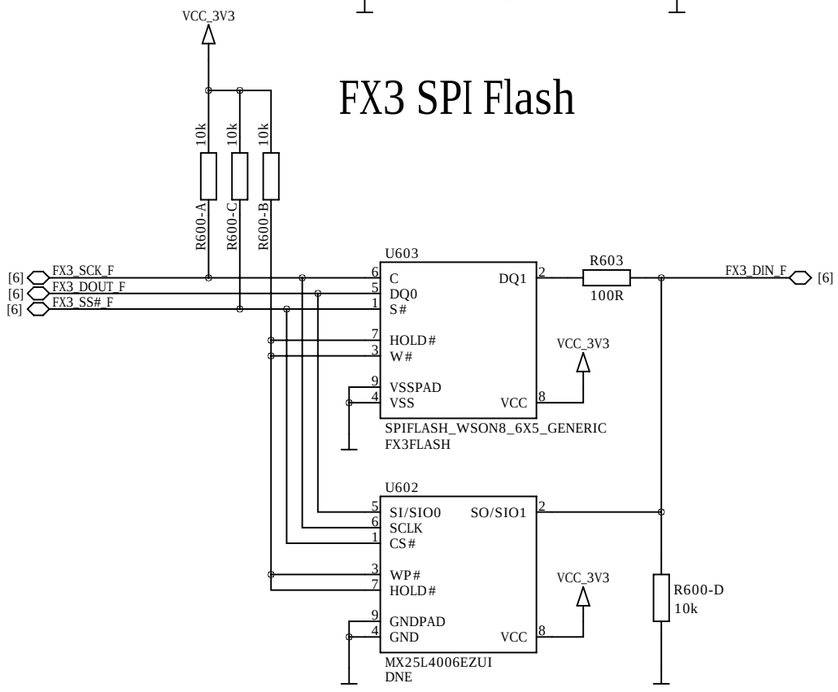

FX3 DQ Multiplexers

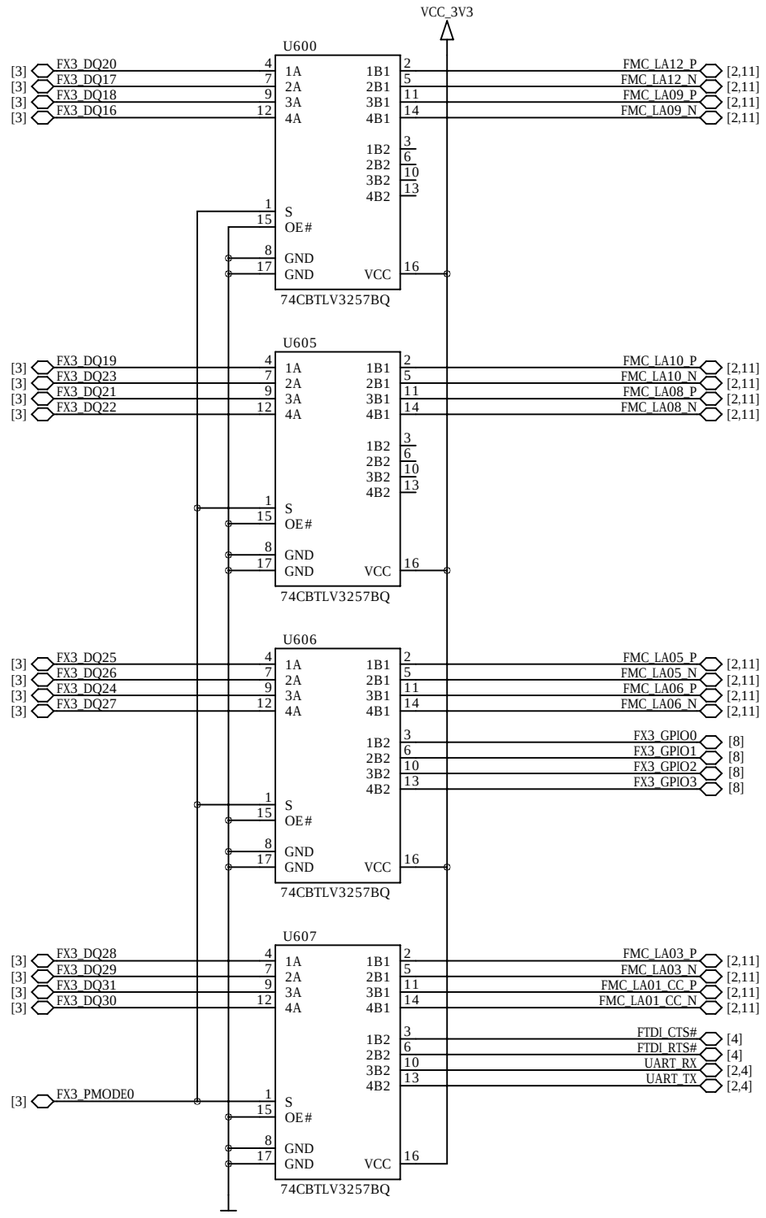

ENCLUSTRA	Copyright © 2021 by Enclustra GmbH	Sheet Name 6_USB3_PERIPHERALS	Customer No 0000	Revision R5.2	DNE = do not equip	Confidential	
	Company Enclustra FPGA Solutions	Project Mars PM3	Project No 413	Designed MHEI	Date 13 Apr 2021	Sheet/sheets 6 / 17	

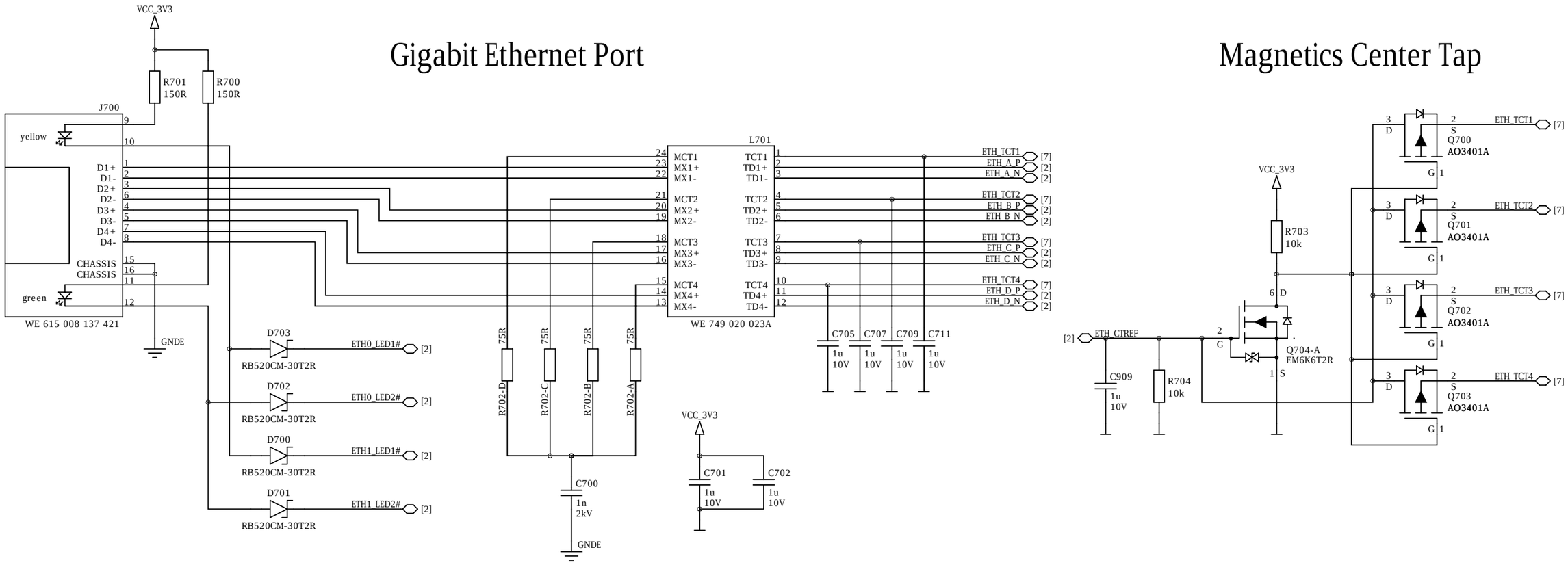

ENCLUSTRA	Copyright © 2021 by Enclustra GmbH	Sheet Name 7_ETH_MAGNETICS	Customer No 0000	Revision R5.2	DNE = do not equip	Confidential	
	Company Enclustra FPGA Solutions	Project Mars PM3	Project No 413	Designed MHEI	Date 13 Apr 2021	Sheet/sheets 7 / 17	

FPGA JTAG Connector

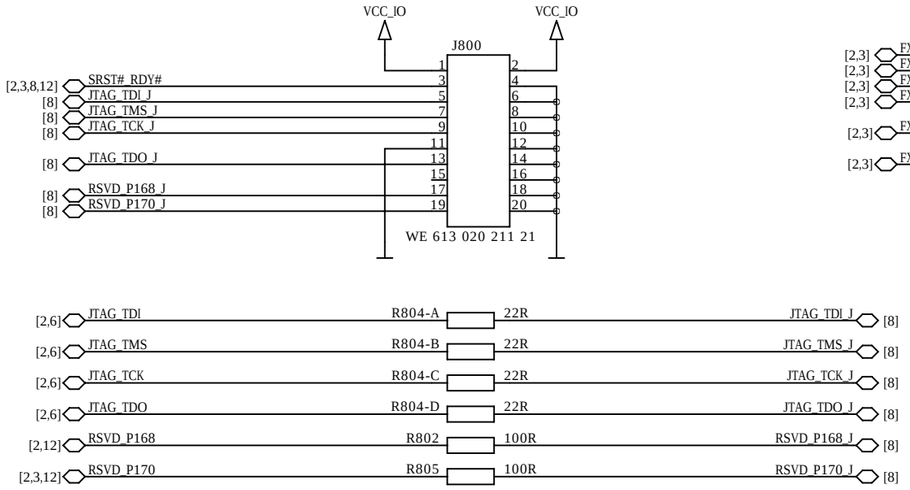

SD-Card Level Shifter

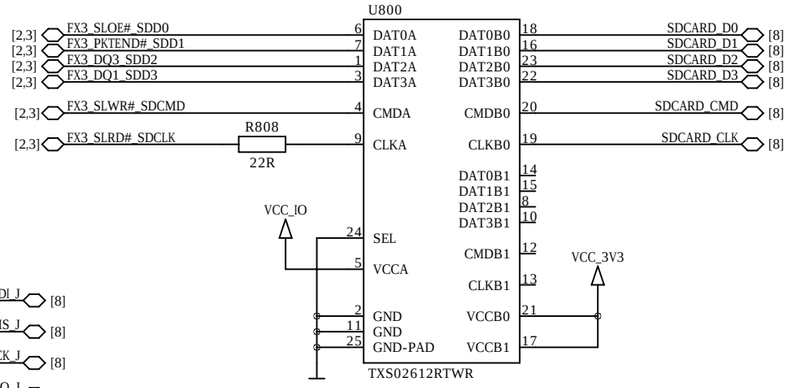

ESD Protection

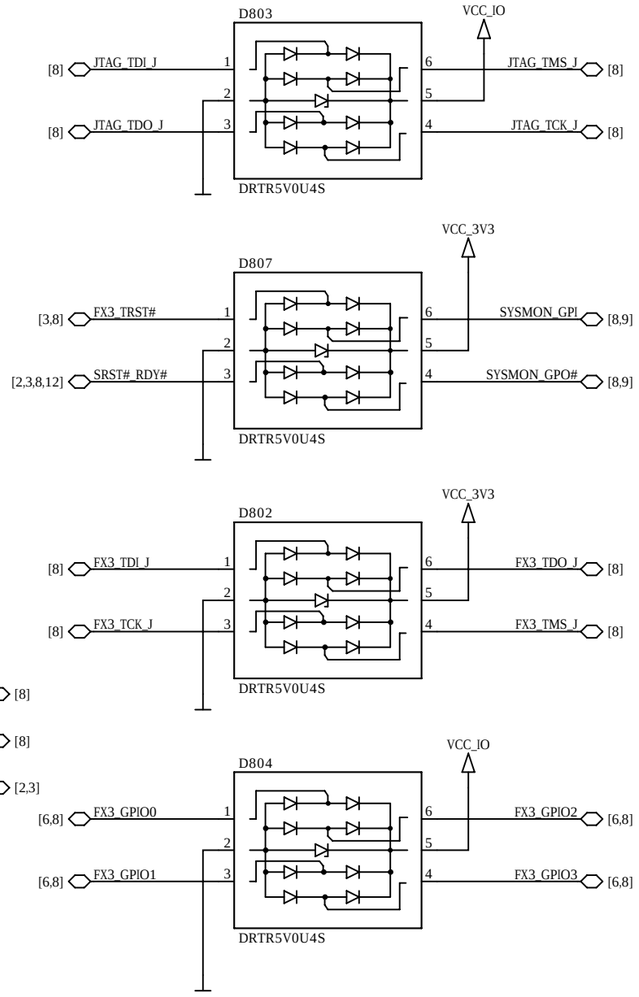

FX3 JTAG Connector

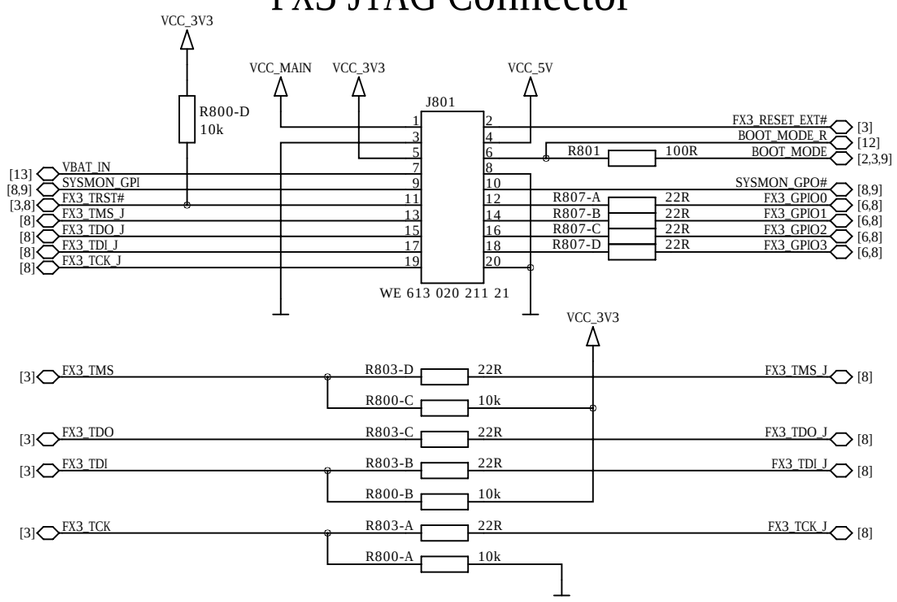

Micro SD-Card Holder

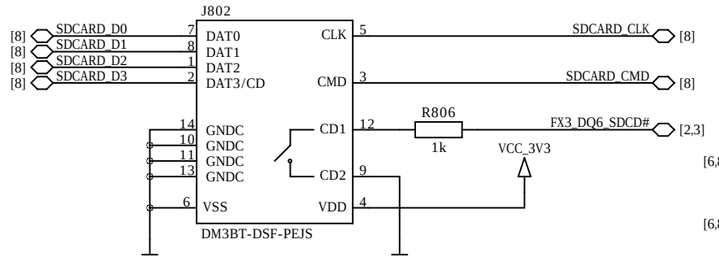

TVS Diode

Diode is assembled between J801 Pin 3&4 (Patch)

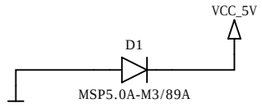

ENCLUSTRA	Copyright © 2021 by Enclustra GmbH	Sheet Name 8_JTAG_SD-CARD	Customer No 0000	Revision R5.2	DNE = do not equip	Confidential	
	Company Enclustra FPGA Solutions	Project Mars PM3	Project No 413	Designed MHEI	Date 13 Apr 2021	Sheet/sheets 8 / 17	

System Monitor

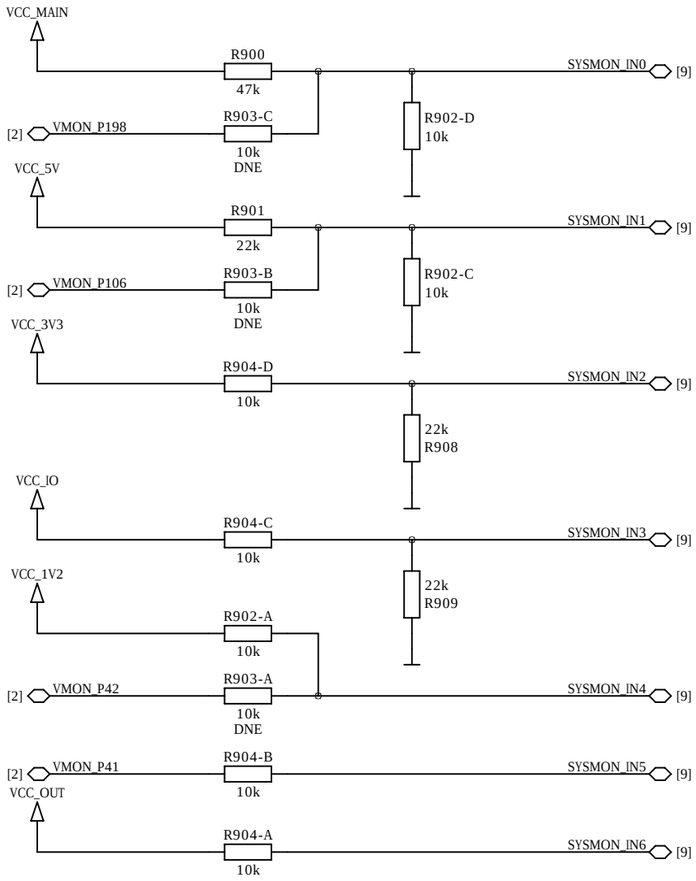

I2C GPIO Expander

I2C Expander is End-of-Life and not equipped.

FX3 cannot be used as an I2C slave anymore due to the pull-down resistors on FX3_SLCS# and FX3_A0.

For information about handling of signals EEPROM_WP, PCIE_I2C_EN and IO_I2C_EN refer to patch specification.

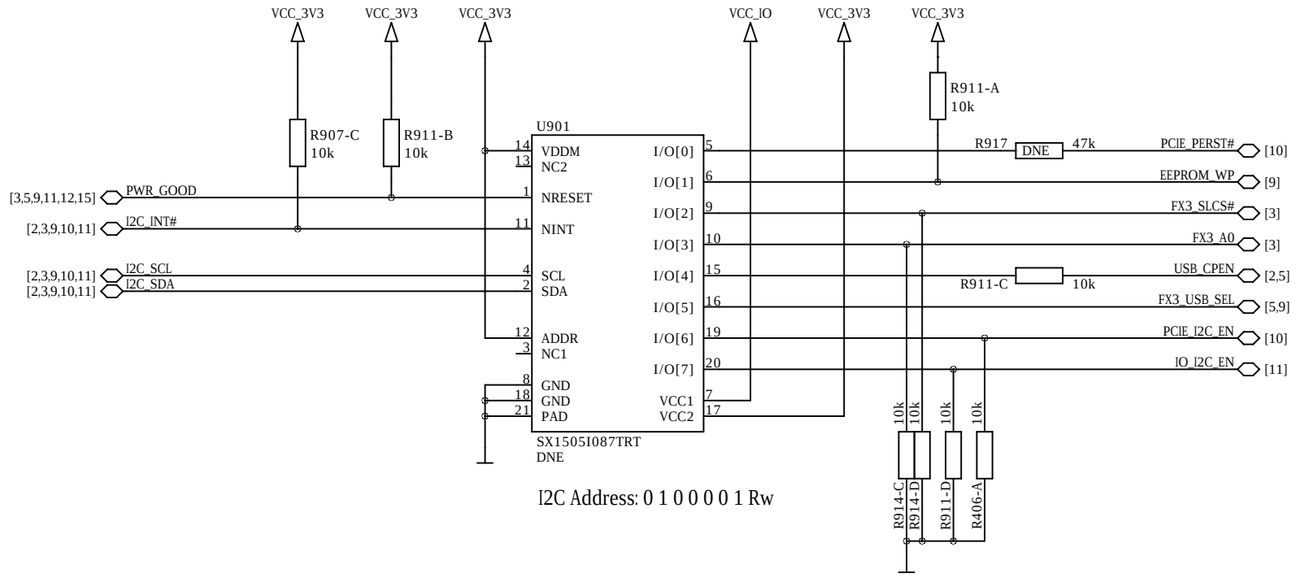

I2C Address: 0 1 0 0 0 0 1 Rw

Reserved Resistors

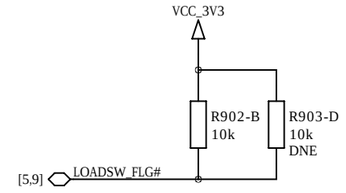

Pull Resistors

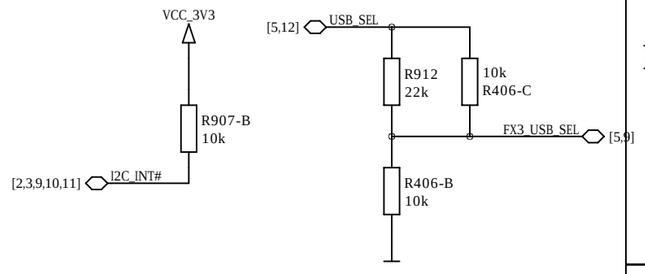

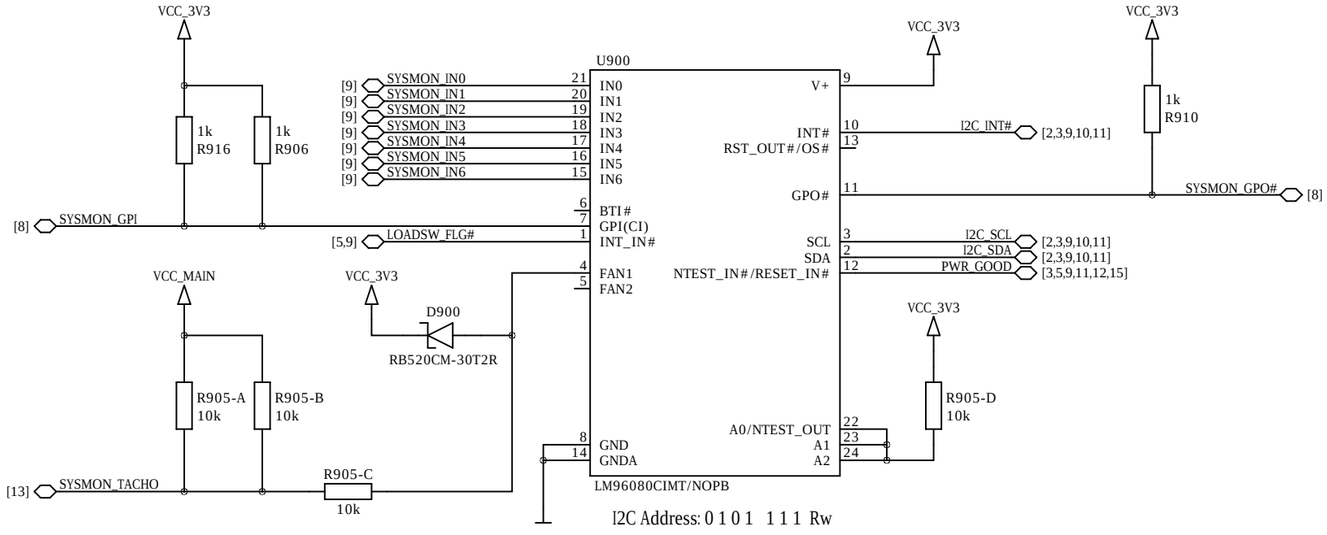

I2C Address: 0 1 0 1 1 1 1 Rw

User EEPROM

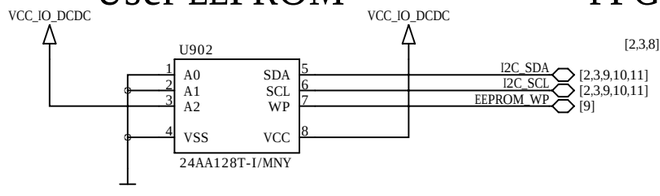

I2C Address: 1 0 1 0 1 0 0 Rw

FPGA Mode Pulldown

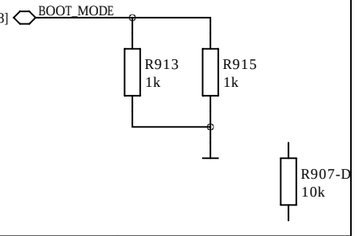

ENCLUSTRA	Copyright	© 2021 by Enclustra GmbH	Sheet Name	9_SYSTEM_MONITOR_I2C	Customer No	0000	Revision	R5.2	DNE = do not equip	Confidential
	Company	Enclustra FPGA Solutions	Project	Mars PM3	Project No	413	Designed	MHEI	Date 13 Apr 2021	Sheet/sheets 9 / 17

Mini HDMI / PCI Express / LVDS Connector

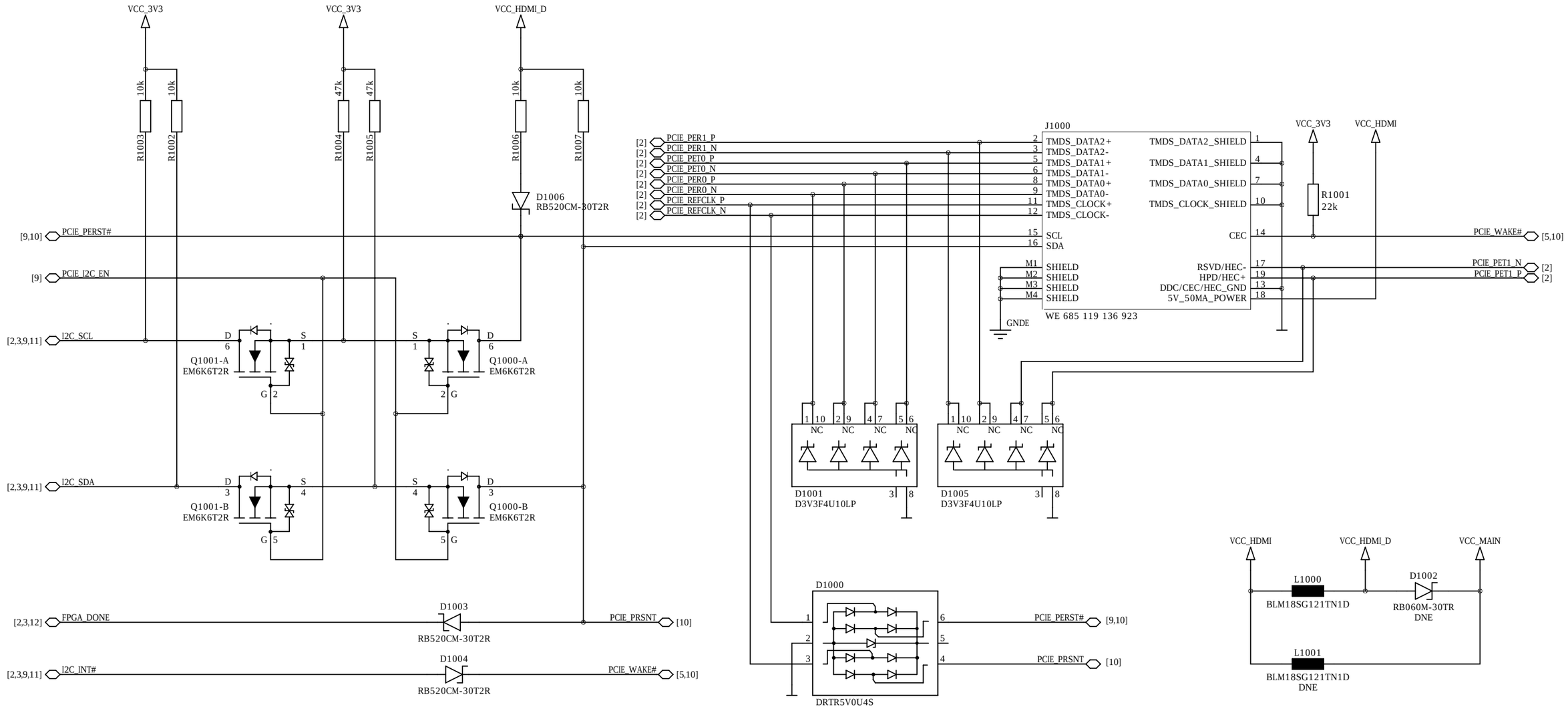

ENCLUSTRA	Copyright	© 2021 by Enclustra GmbH	Sheet Name	10_HDMI_PCI_EXPRESS_LVDS	Customer No	0000	Revision	R5.2	DNE = do not equip	Confidential
	Company	Enclustra FPGA Solutions	Project	Mars PM3	Project No	413	Designed	MHEI	Date 13 Apr 2021	Sheet/sheets 10 / 17

FMC LPC Connector

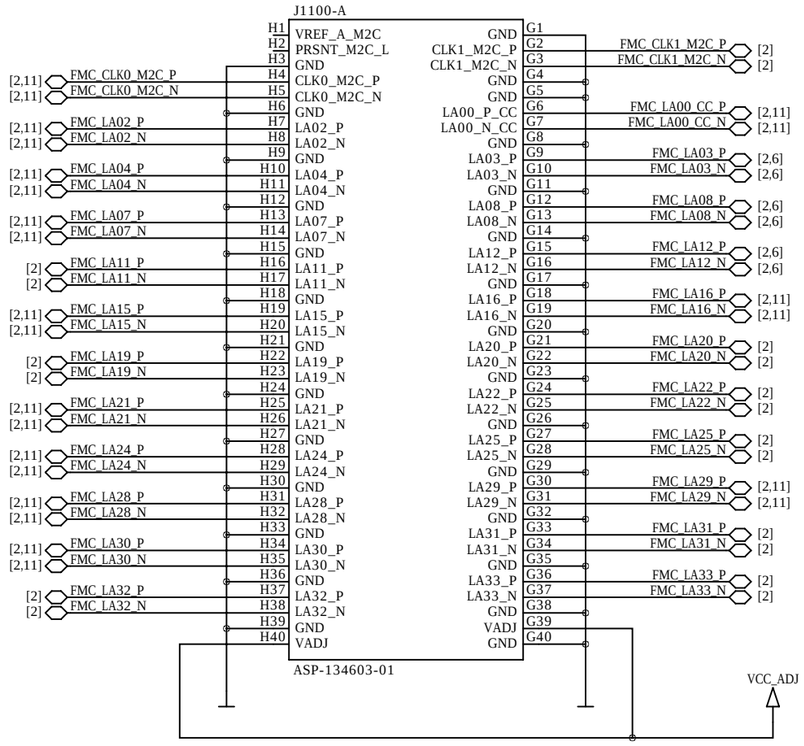

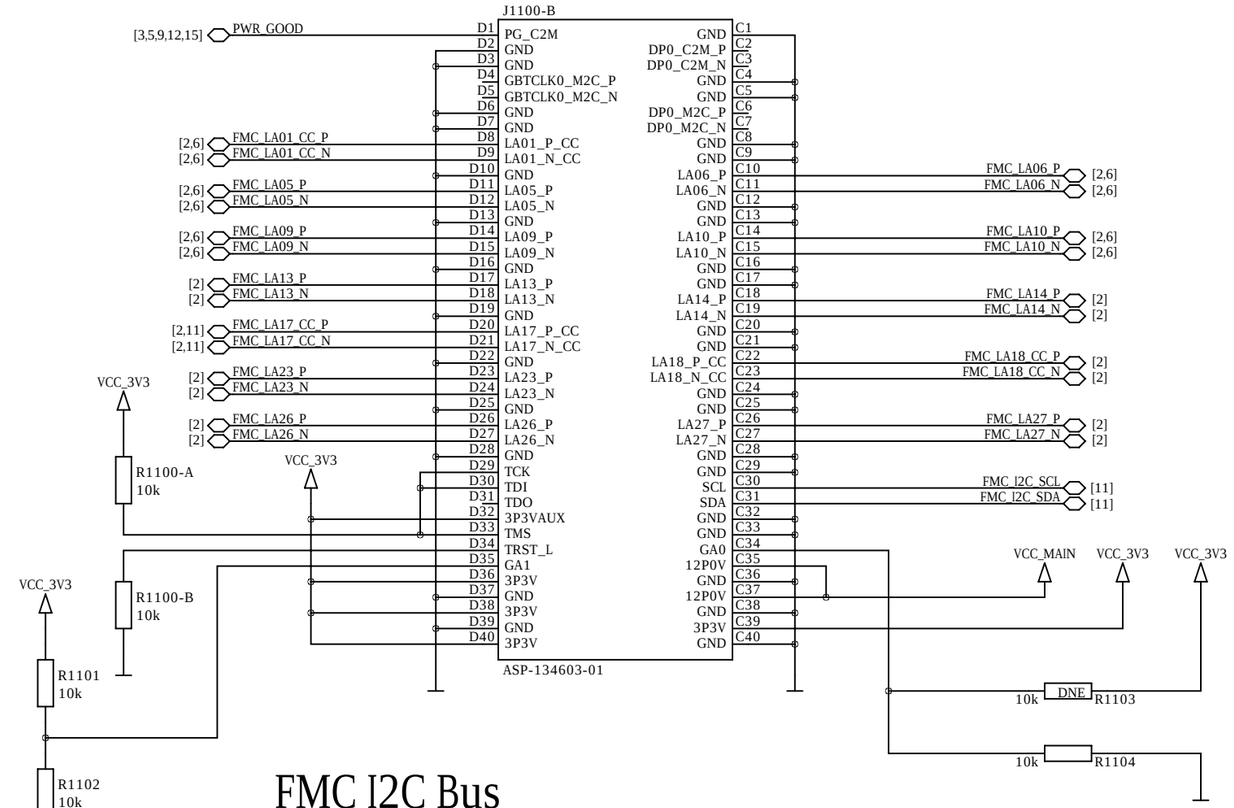

IO Connector

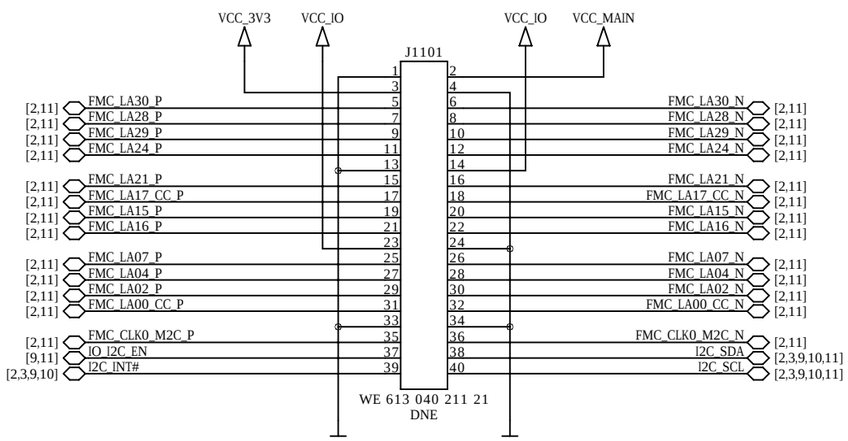

FMC I2C Bus

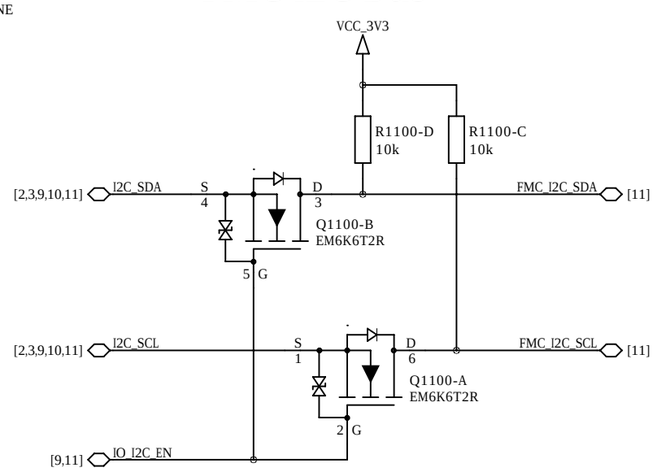

FMC Power

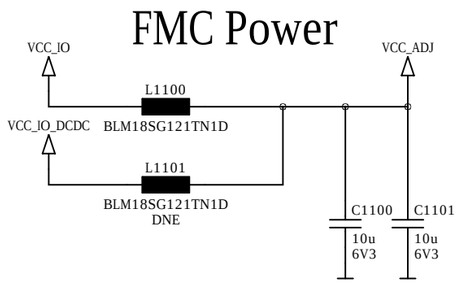

Board Configuration

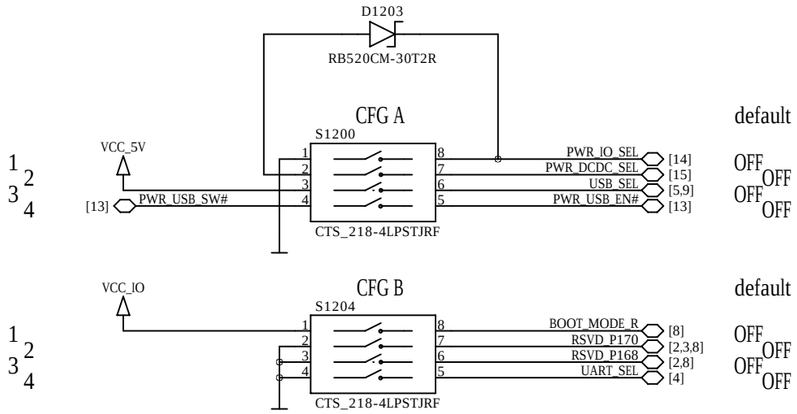

Buttons

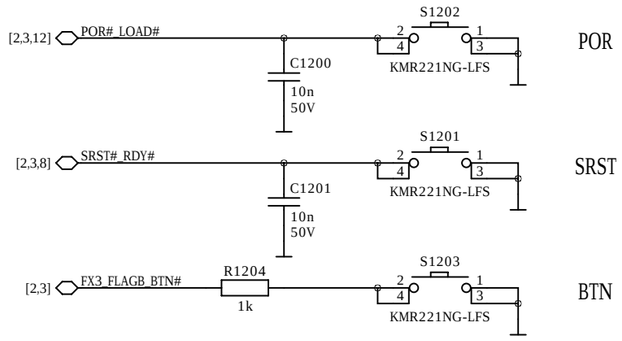

Reset Circuit

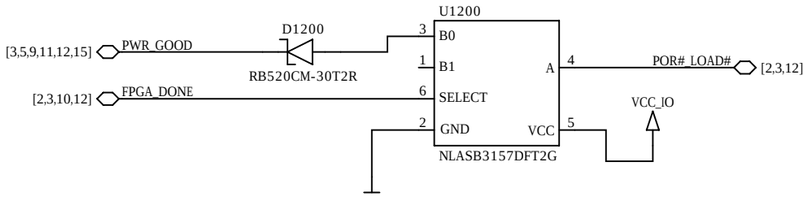

Status LEDs

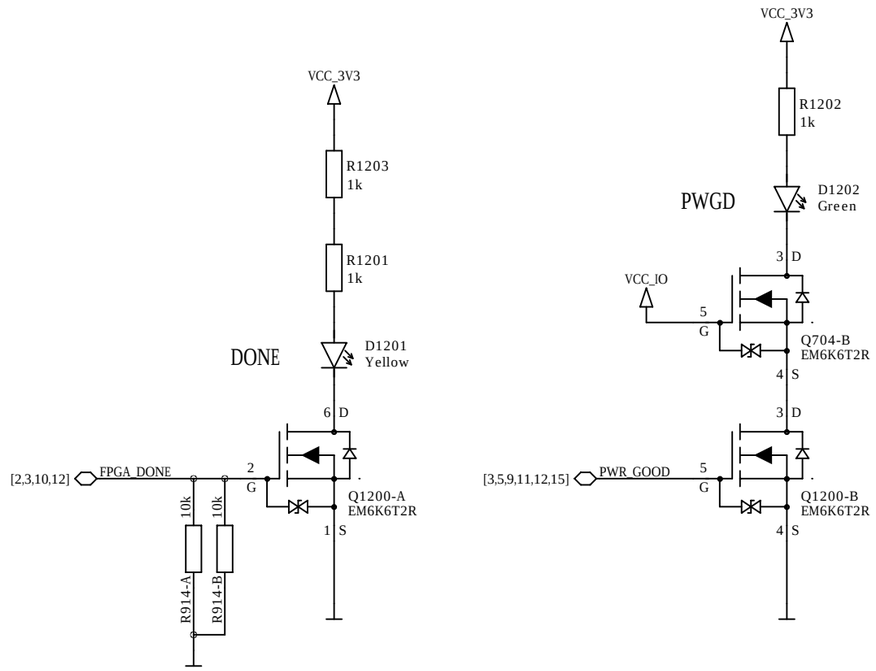

IO Voltage Selection

Check the module documentation for the supported IO voltage range.

Select the correct IO voltage before powering the board.

CFG A1	CFG A2	VCC_IO	VCC_IO_DCDC
OFF default	OFF default	VCC_OUT 1.8V support	2.5V
OFF	ON	VCC_OUT 1.8V support	2.5V
ON	OFF	2.5V	2.5V
ON	ON	3.3V	3.3V

12V DC Power Input

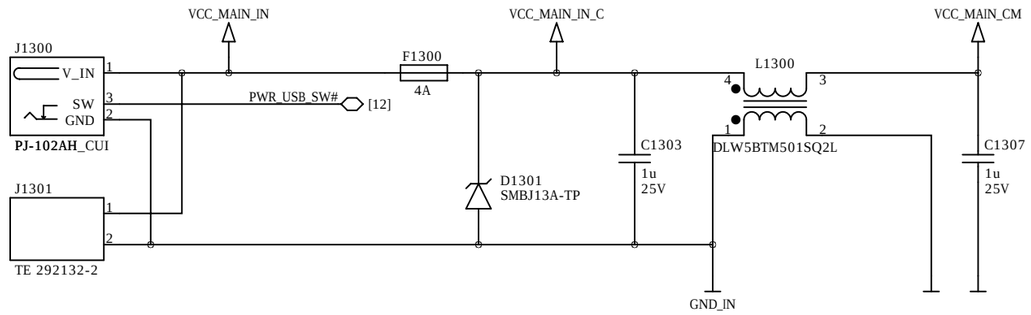

Main Power Soft Start

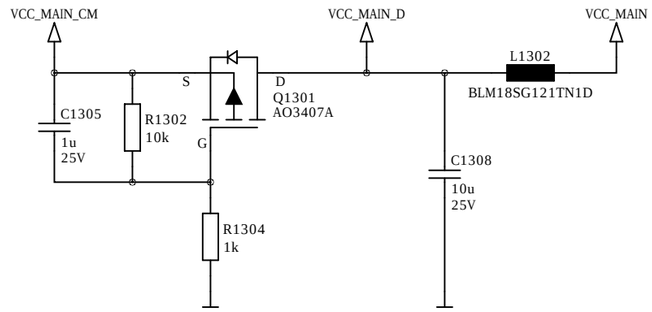

Fan Connector

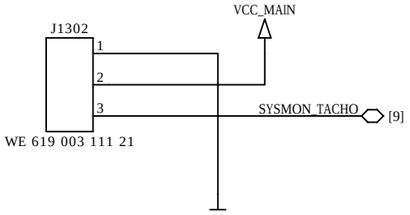

Battery Holder

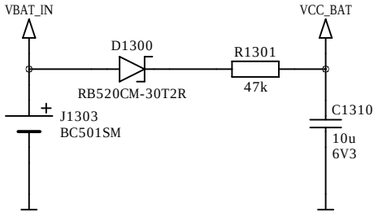

USB Power Soft Start

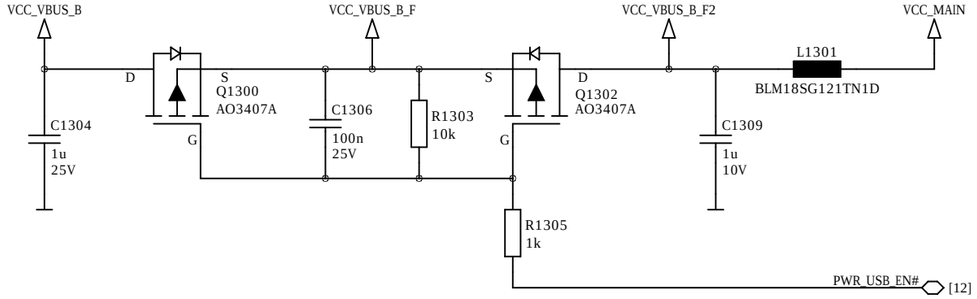

ENCLUSTRA	Copyright © 2021 by Enclustra GmbH	Sheet Name 13_POWER_INPUT	Customer No 0000	Revision R5.2	DNE = do not equip	Confidential	
	Company Enclustra FPGA Solutions	Project Mars PM3	Project No 413	Designed MHEI	Date 13 Apr 2021	Sheet/sheets 13 / 17	

DC/DC Converter 5V 3A 5%

FS = 500kHz Vfb = 0.8V

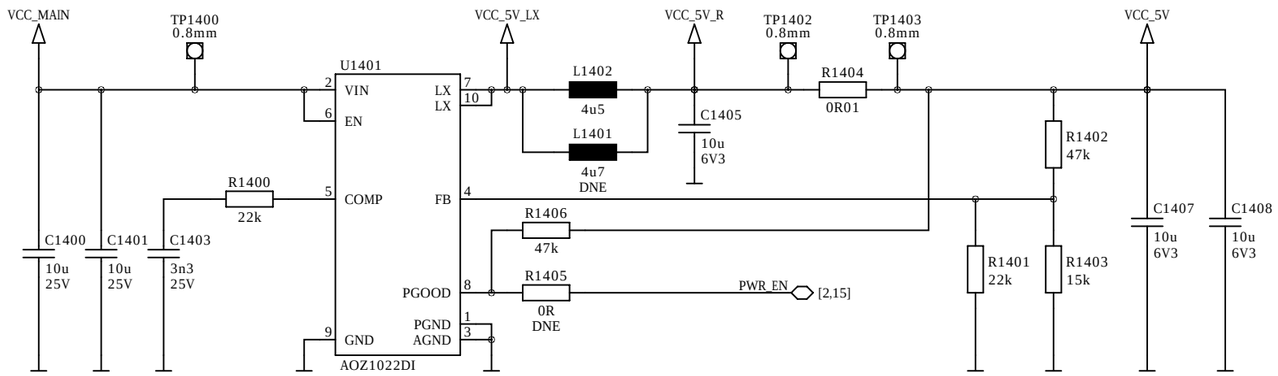

IO Power Mux

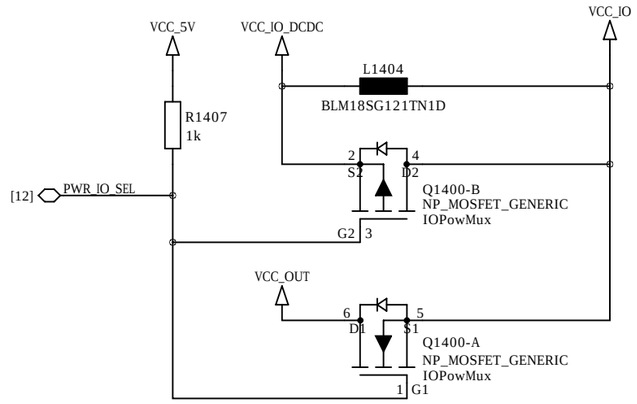

DC/DC Converter 1.2V 0.5A 5%

FS = 3.5MHz

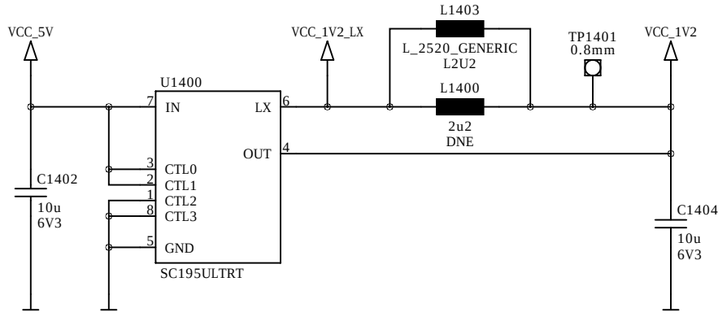

ENCLUSTRA	Copyright	© 2021 by Enclustra GmbH	Sheet Name	14_POWER_5V_1.2V	Customer No	0000	Revision	R5.2	DNE = do not equip	Confidential
	Company	Enclustra FPGA Solutions	Project	Mars PM3	Project No	413	Designed	MHEI	Date 13 Apr 2021	Sheet/sheets 14 / 17

DC/DC Converter 3.3V 3A 5%

FS = 500kHz Vfb = 0.8V

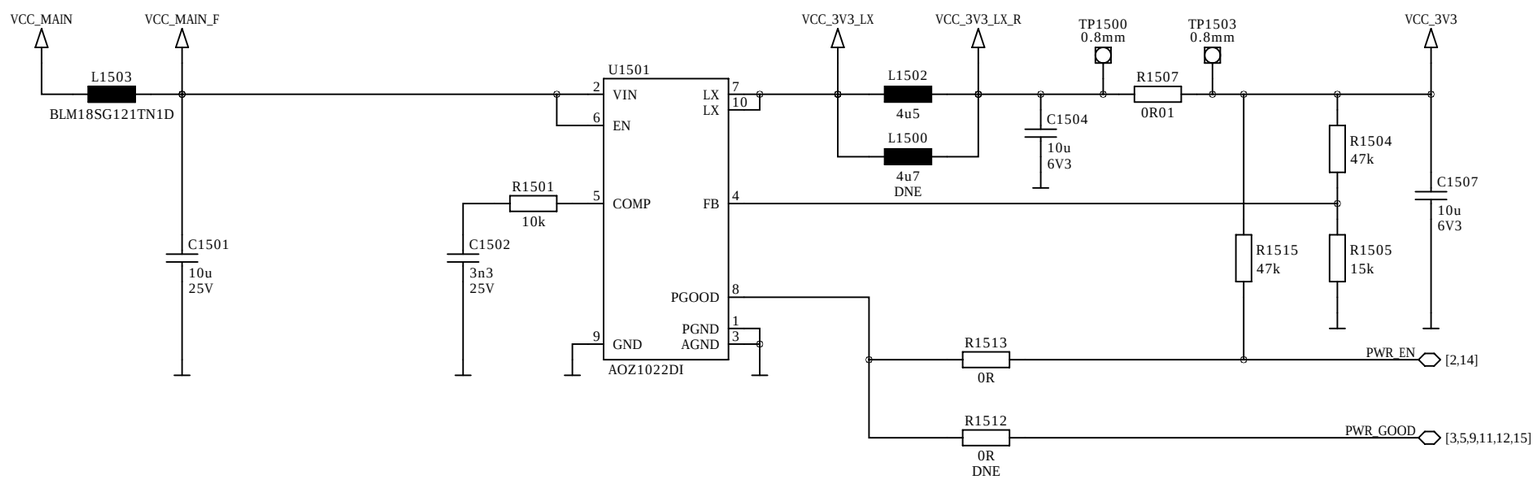

DC/DC Converter 3.3V/2.5V 3A 5%

FS = 500kHz Vfb = 0.8V

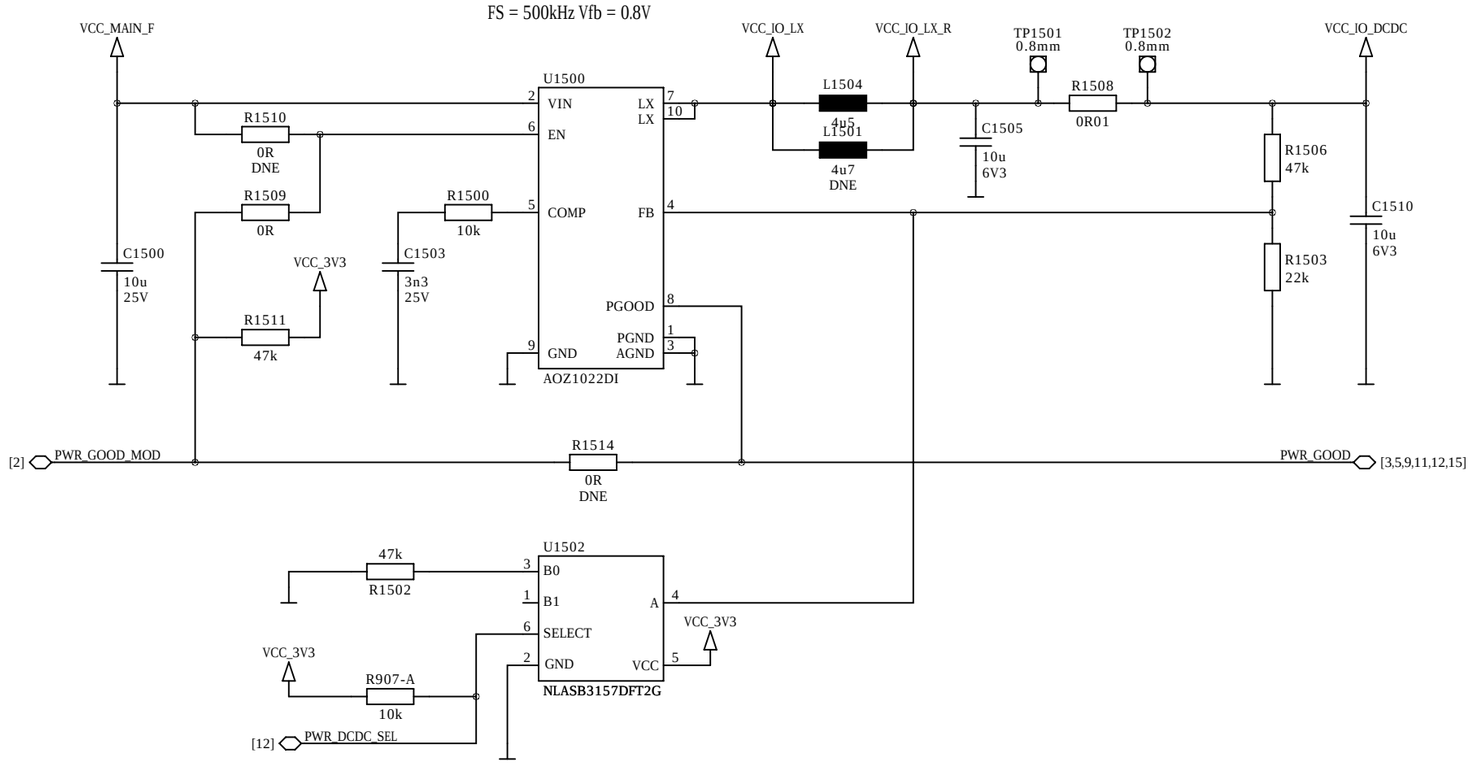

Power Decoupling

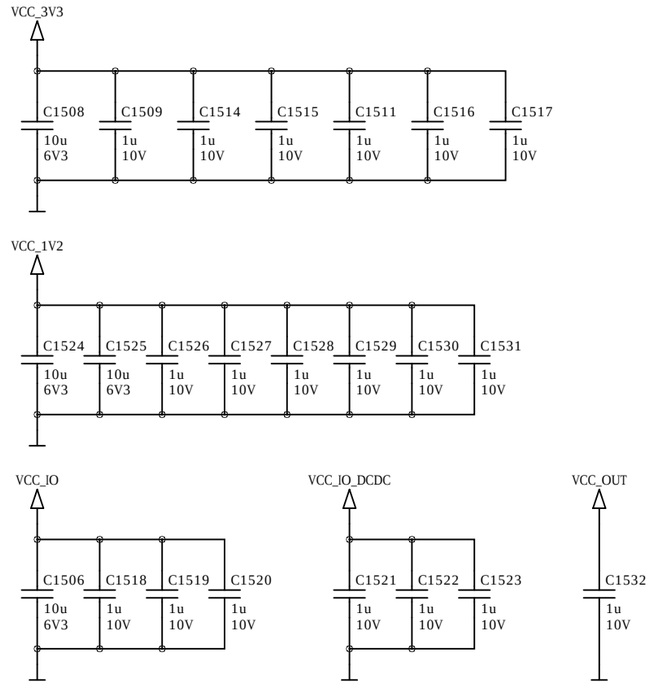

ENCLUSTRA	Copyright © 2021 by Enclustra GmbH	Sheet Name 15_POWER_3.3V_3.3/2.5V	Customer No 0000	Revision R5.2	DNE = do not equip	Confidential	
	Company Enclustra FPGA Solutions	Project Mars PM3	Project No 413	Designed MHEI	Date 13 Apr 2021	Sheet/sheets 15 / 17	

Board Mounting Holes

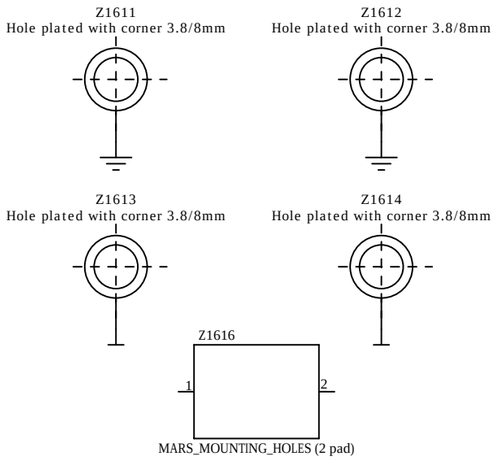

Chassis Ground

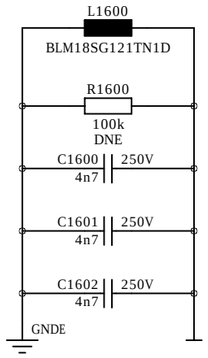

Fiducials

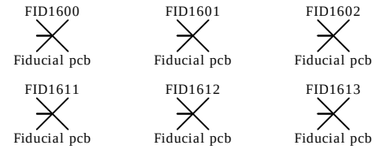

Panel Fiducials

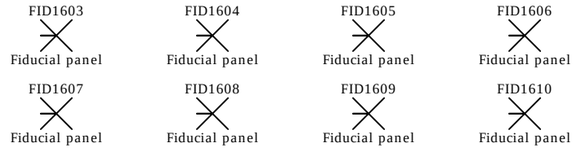

Ground Test Points

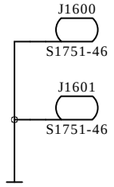

PCB

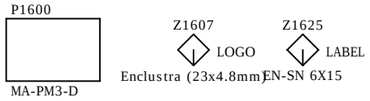

Text

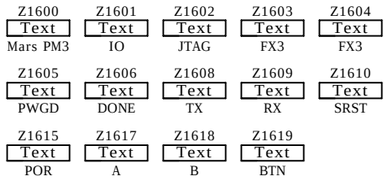

Connector Pin-1 Marking

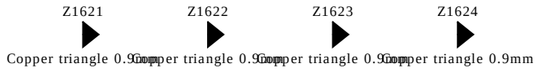

Board Spacers

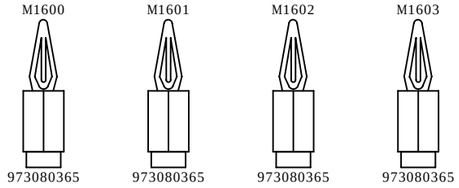

ENCLUSTRA	Copyright	© 2021 by Enclustra GmbH	Sheet Name	16_MECHANICS	Customer No	0000	Revision	R5.2	DNE = do not equip	Confidential
	Company	Enclustra FPGA Solutions	Project	Mars PM3	Project No	413	Designed	MHEI	Date 13 Apr 2021	Sheet/sheets 16 / 17

Component Variants

FX3FLASH	L2U2	IOPowMux
Part U603A MX25V1635FZNI EN101997	Part L1403A 2u2 EN101850	Part Q1400A DMC2038LVT EN100503
Part U603B AT25SF161-MHD-T EN101939	Part L1403B 2u2 EN101849	Part Q1400B DMG6602SVTQ-7 EN102244
Part U603C IS25LP016D-JKLE EN101998		

Assembly Variants

Assembly Variant	FX3FLASH	L2U2	IOPowMux
Variant EN102243:0 MA-PM3-W-R5.2	Option EN102243:1 FX3FLASH EN101997	Option EN102243:2 L2U2 EN101850	Option EN102243:3 IOPowMux DNE