Mars PM3 Base Board

R5.2 Patch Specification

Purpose

The purpose of this document is to describe the patching options for a set of signals affected by the removal of the I2C expander on Mars PM3 base board. This component is now end-of-life, with no compatible replacement part available.

Product Information	Number	Name
Product	MA-PM3	Mars PM3 Base Board

Document Information	Reference	Version	Date	Author
Reference / Version / Date / Author	D-0000-413-002	01	25.10.2018	MMOS

Copyright Reminder

Copyright © 2018 Enclustra GmbH, Switzerland. All rights reserved.

Unauthorized duplication of this document, in whole or in part, by any means, is prohibited without the prior written permission of Enclustra GmbH, Switzerland.

Although Enclustra GmbH believes that the information included in this publication is correct as of the date of publication, Enclustra GmbH reserves the right to make changes at any time without notice.

All information in this document is strictly confidential and may only be published by Enclustra GmbH, Switzerland.

All referenced registered marks and trademarks are the property of their respective owners.

1 I2C Expander Patch/Assembly Options

The resistor array R911 is equipped by default. In the cases where the signal EEPROM_WP (user EEPROM write protect) must be driven low or where the IO_I2C_EN (I2C enable on FMC connector) must be driven high, R911 has to be disassembled and the following patching options should be considered.

1.1 EEPROM_WP

1.1.1 Option 1 – EEPROM write-protected

Pull-up to VCC_3V3. The EEPROM is write-protected.
Assemble 10k 0402 onto R911 footprint (R911.8 to R911.1)

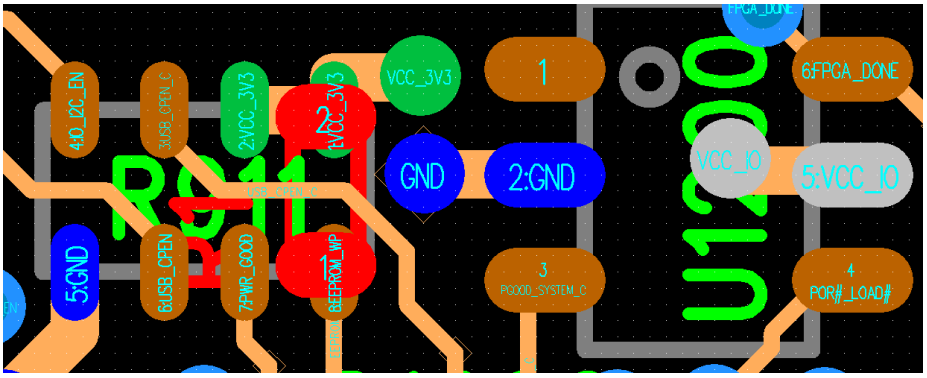

1.1.2 Option 2 – EEPROM not write-protected

Pull-down to GND. The EEPROM is not write-protected.
Assemble 10k 0402 between R911.8 and U1200.2.

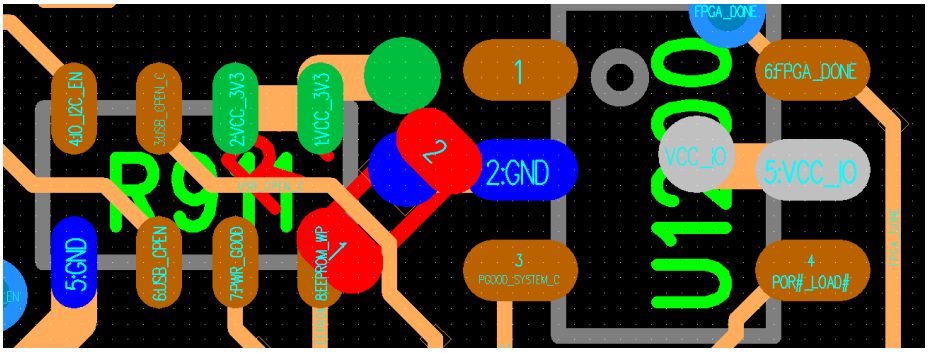

1.2 IO_I2C_EN

1.2.1 Option 1 – I2C on FMC enabled

Pull-up to VCC_3V3. I2C on FMC connector is always enabled.
Assemble 10k pull-up (or solder bridge if 0R wanted) between R911.4 and R911.2. Making a short-circuit to R911.3 doesn't matter, since this pad is connected nowhere.

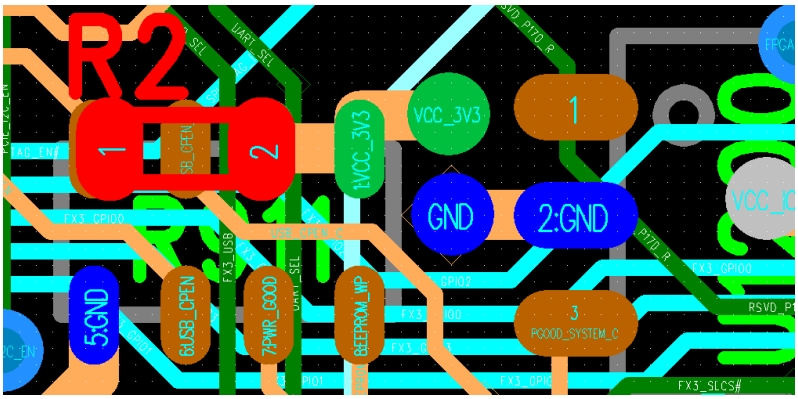

1.2.2 Option 2 – I2C on FMC disabled

Pull-down to GND. I2C on FMC Card is not enabled.
Assemble 10k (0402) pull-down resistor between R911.4 and R911.5.

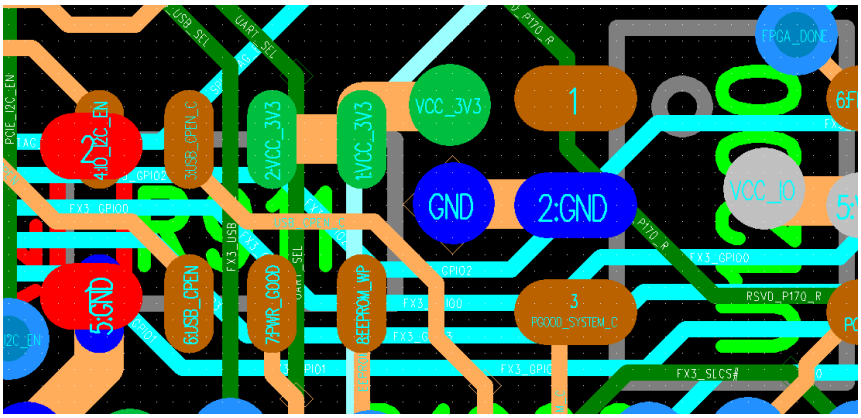

1.3 PCIE_I2C_EN

R406 must remain assembled as other pins of the resistor array are used on module.

1.3.1 Option 1 (default) - PCIe

Pull-down to GND (R406). PCIe can be used.

1.3.2 Option 2 - HDMI
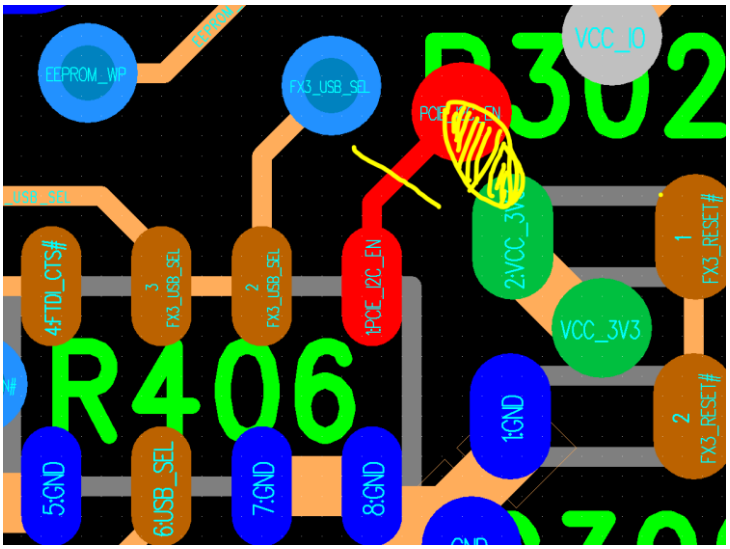
Pull-up to VCC_3V3. HDMI can be used.
Cut signal trace to R406 pin 1.
Scratch via and connect Via to R302 pin 2 with a solder bridge.