Enclustra User Schematics

Mercury PE1 Revision 4.8

Disclaimer

User schematics do not include proprietary Enclustra design elements, such as power supply circuits.
These circuits use optimized designs which are extremely compact and remain proprietary to Enclustra.
The user manual provides all necessary information to use the module and its interfaces.

User schematics are provided after purchase of Enclustra hardware, and may also be provided in certain cases before purchase, to assist in product evaluation.
No part of the schematics may be copied or modified without written permission from Enclustra.

Full schematics, including a full bill-of-materials, may be available through the purchase of a hardware licence for the product in question.
Please contact Enclustra Sales for more information.

Note: DNE = Do Not Equip (parts not equipped by default)

© Enclustra GmbH

Mercury PE1 Base Board

Revision 4.8

Sheet 1: Cover
Sheet 2: Mercury Module Connectors A/B
Sheet 3: Mercury Module Connector C
Sheet 4: System Controller PLD
Sheet 5: USB Controller
Sheet 6: USB Connectors
Sheet 7: USB Hub / Multiplexers
Sheet 8: Dual Gigabit Ethernet Ports
Sheet 9: Micro SD-Card / EEPROM / eMMC Flash
Sheet 10: PCIe/SATA Mini Card / Sensor
Sheet 11: User Interface
Sheet 12: FMC HPC IO Connector
Sheet 13: FMC LPC IO Connector
Sheet 14: Anios IO Connectors
Sheet 15: PMOD IO Connectors
Sheet 16: Oscillator / Clock Generator
Sheet 17: JTAG/Control Connectors / Battery / Flash
Sheet 18: PCIe x4 Connector
Sheet 19: Power Input / Power Control
Sheet 20: Power Converter / Current Sense
Sheet 21: System Monitor
Sheet 22: Mechanics
Sheet 23: Assembly variants

Mercury Module Connector A

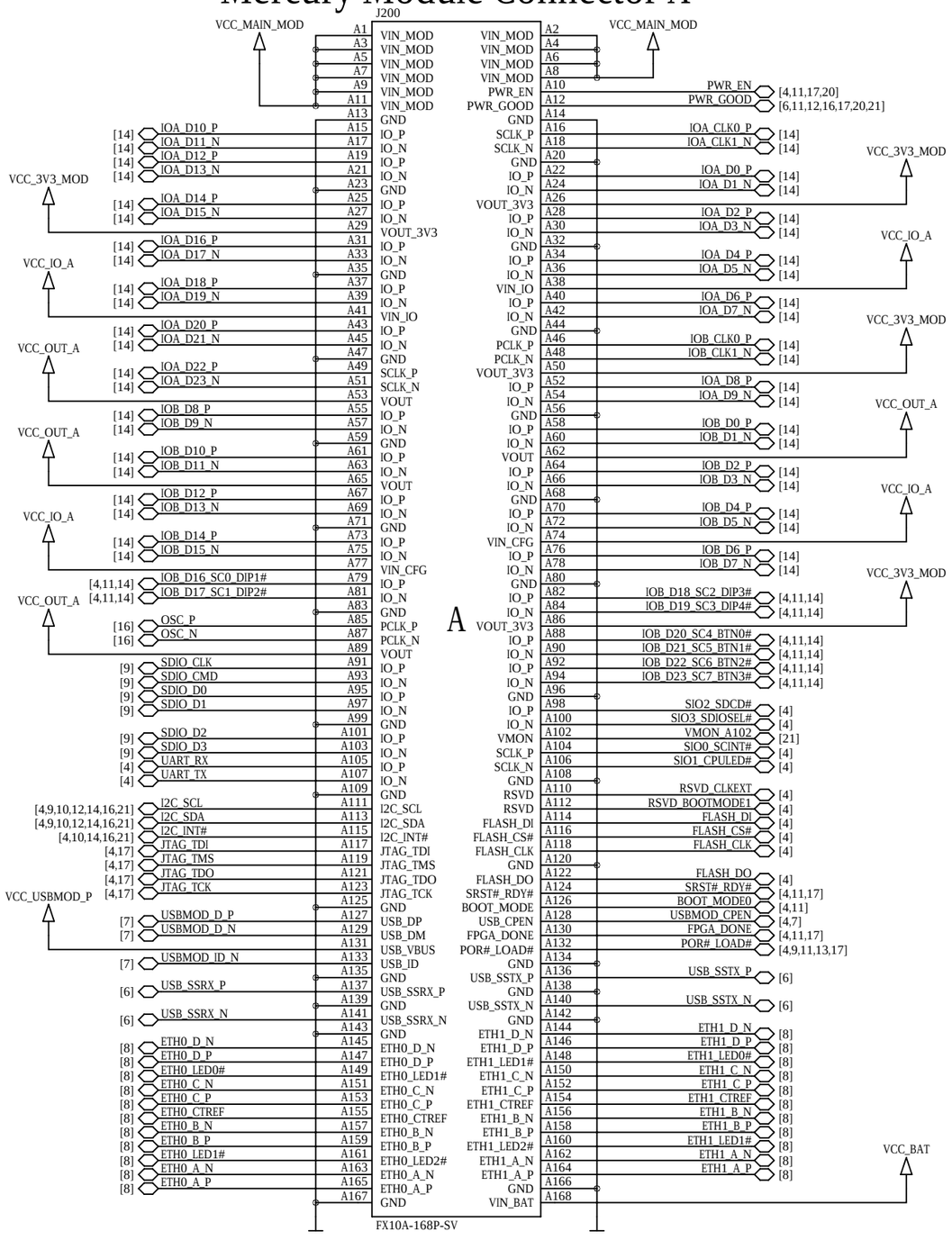

Mercury Module Connector B

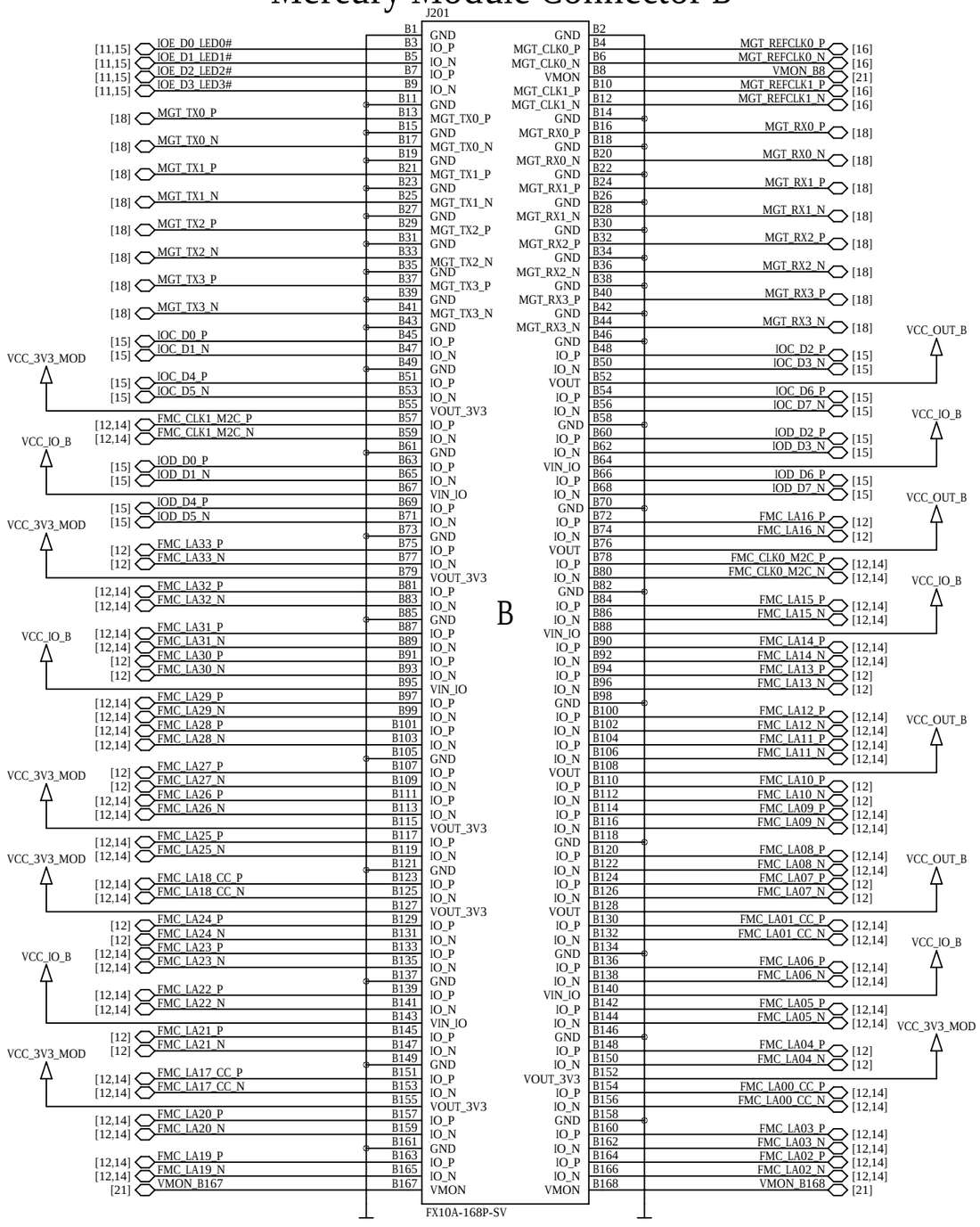

ENCLUSTRA	Copyright © 2023 by Enclustra GmbH	Sheet Name 2_MERCURY_MODULE_CONNECTORS_A/B	Customer No 0000	Revision R4.8	DNE = do not equip	Confidential	
	Company Enclustra FPGA Solution Center	Project Mercury PE1	Project No 423	Designed MHEI	Date 9 Jan 2024	Sheet/sheets 2 / 23	

Mercury Module Connector C

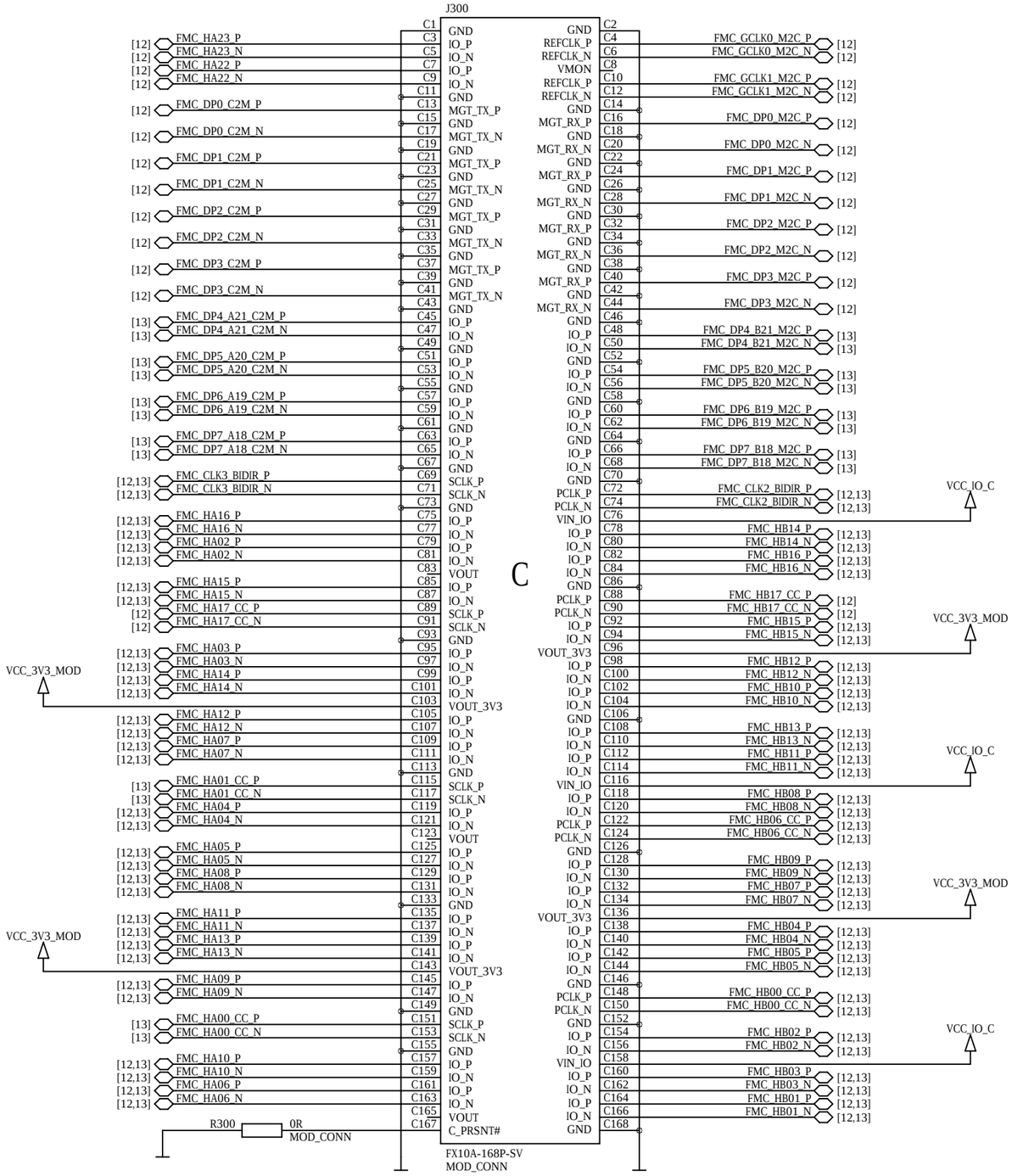

ENCLUSTRA	Copyright	© 2023 by Enclustra GmbH	Sheet Name	3_MERCURY_MODULE_CONNECTOR_C	Customer No 0000	Revision R4.8	DNE = do not equip	Confidential
	Company	Enclustra FPGA Solution Center	Project	Mercury PE1	Project No 423	Designed MHEI	Date 9 Jan 2024	Sheet/sheets 3 / 23

System Controller PLD

The pinout is not included in the user schematics.

Programming the system controller PLD with a user bitstream voids the board warranty.

I2C Address: 0 0 0 1 1 0 1 Rw

SC Bank 0

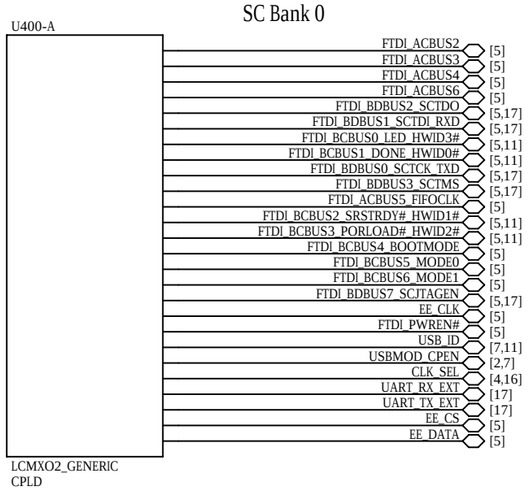

SC Bank 1

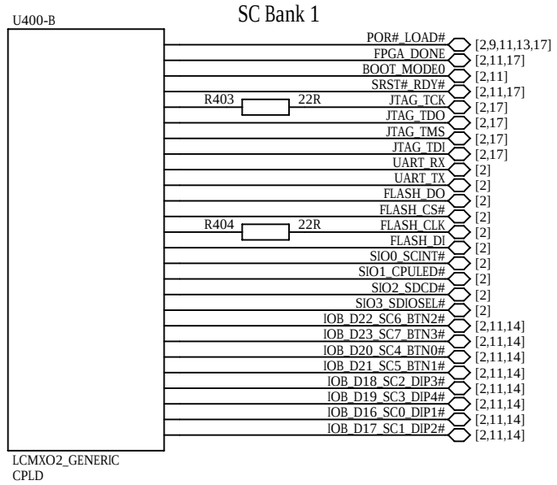

SC Bank 2

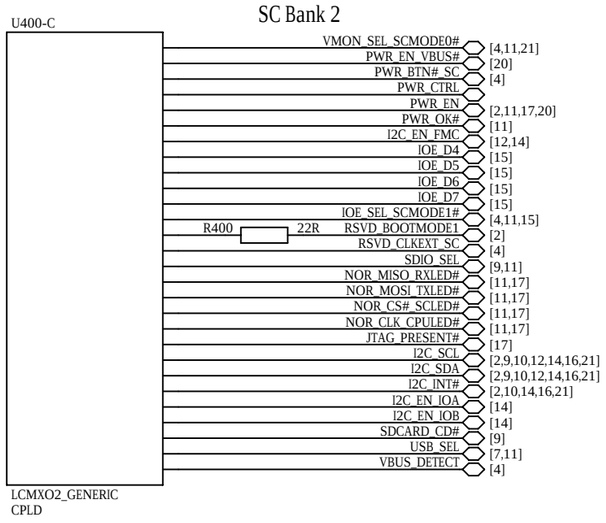

SC Bank 3

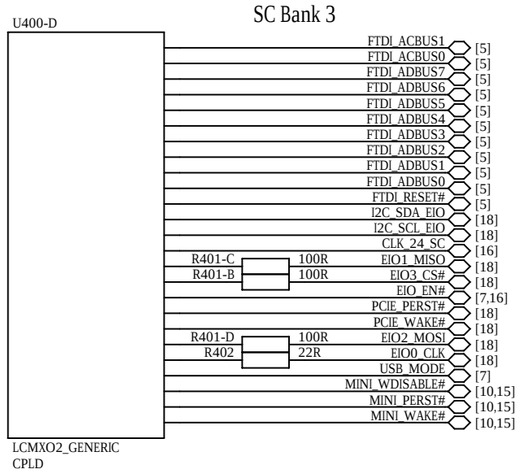

SC Power

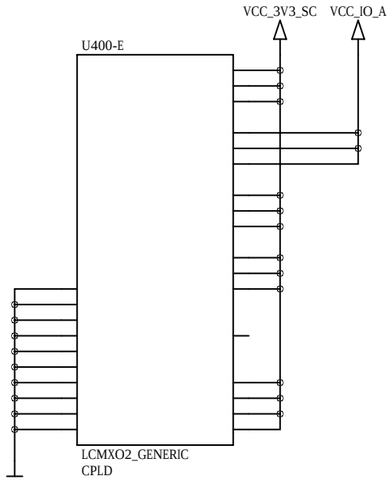

SC Decoupling

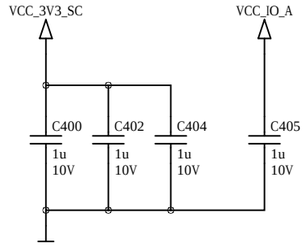

Synchronous Module Clock

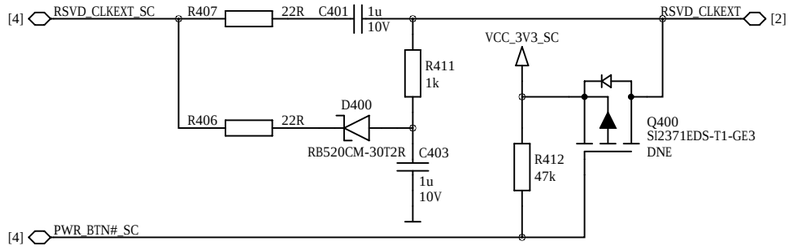

USB VBUS Detection

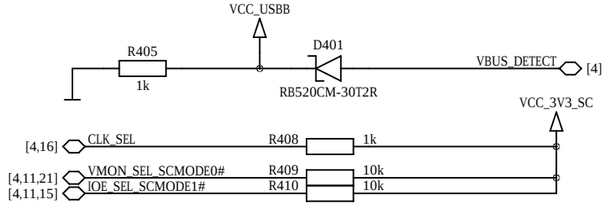

FTDI USB 2.0 Device Controller

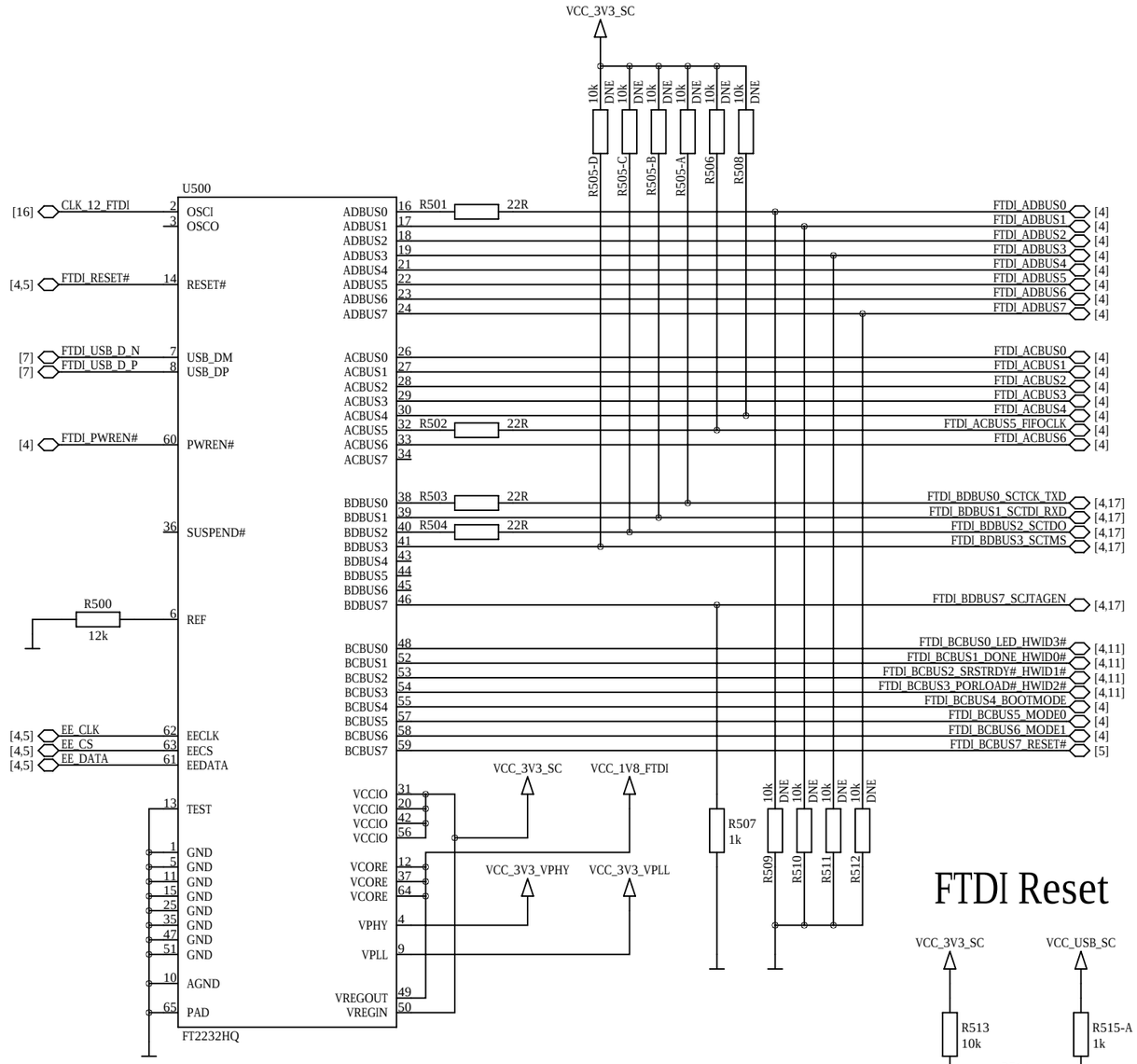

FTDI EEPROM

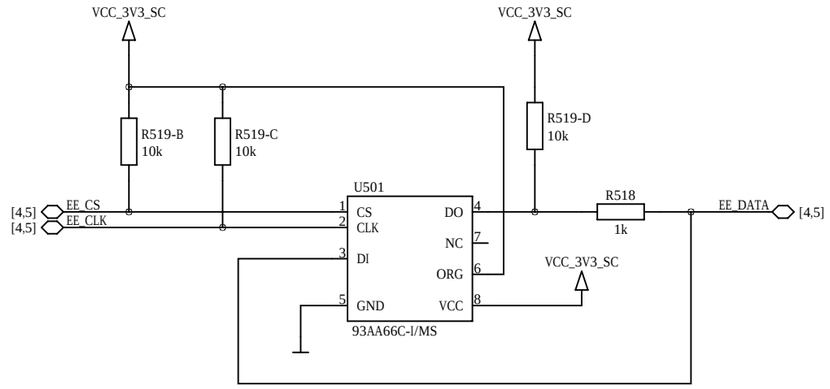

FTDI Decoupling

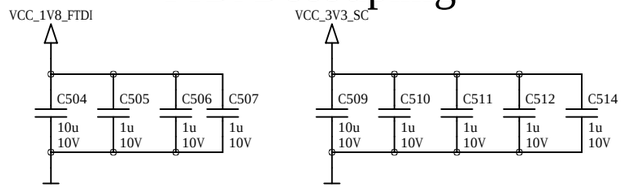

LDO 5V to 3.3V 0.15A

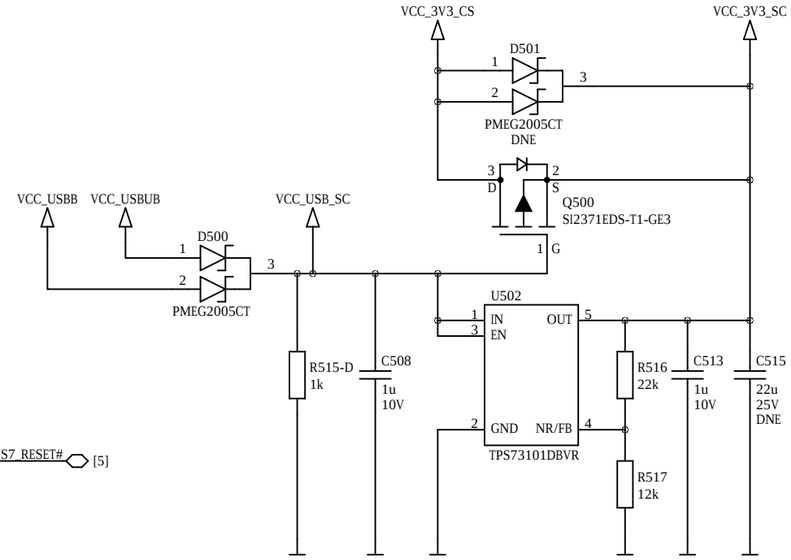

FTDI Reset

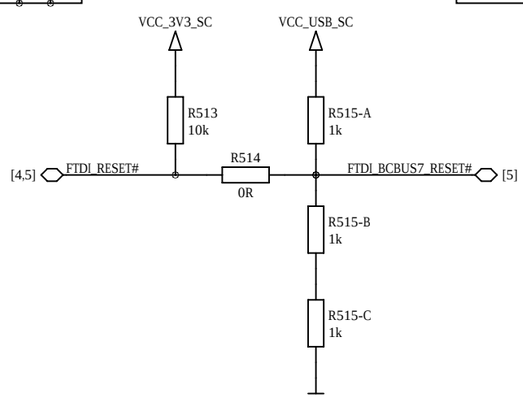

FTDI Power Filters

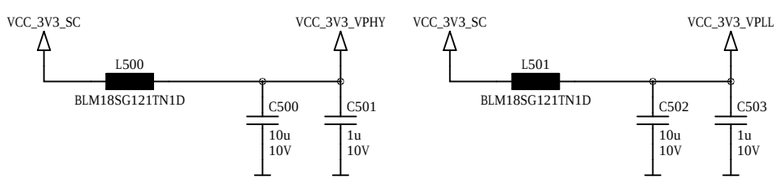

R519-A
10k

ENCLUSTRA	Copyright	© 2023 by Enclustra GmbH	Sheet Name	5_USB_CONTROLLER	Customer No	0000	Revision	R4.8	DNE = do not equip	Confidential
	Company	Enclustra FPGA Solution Center	Project	Mercury PE1	Project No	423	Designed	MHEI	Date 9 Jan 2024	Sheet/sheets 5 / 23

USB 2.0 USB Host

right-angle, single

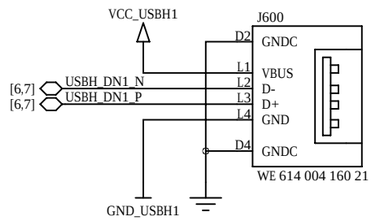

USB 2.0 USB Host

right-angle, dual, optional

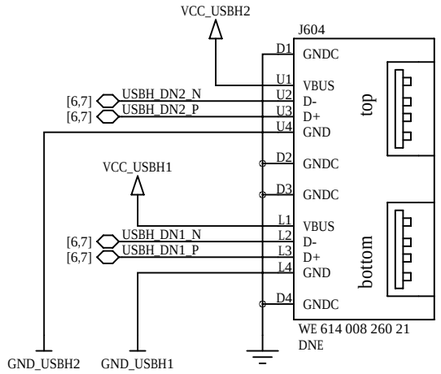

USB 2.0 USB Host

vertical

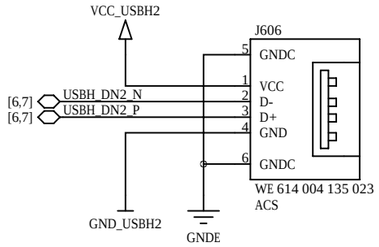

USB 2.0 Host ESD Protection

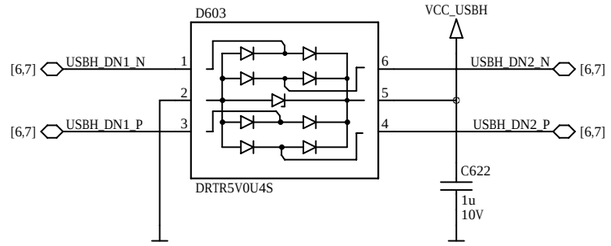

USB 3.0 Device Connector

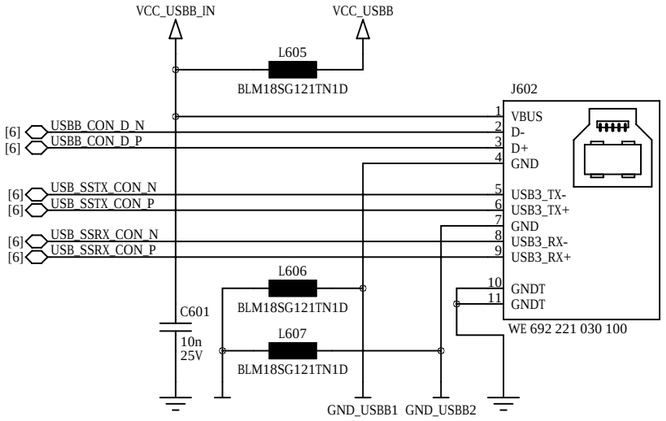

USB 3.0 Redriver

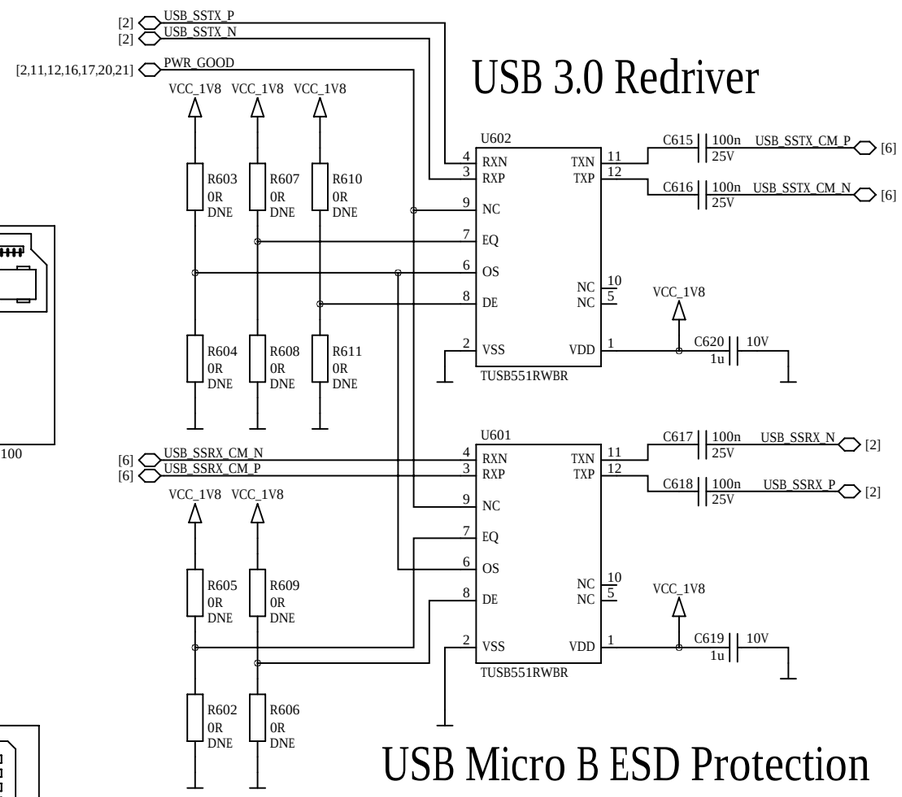

USB 3.0 Device ESD Protection

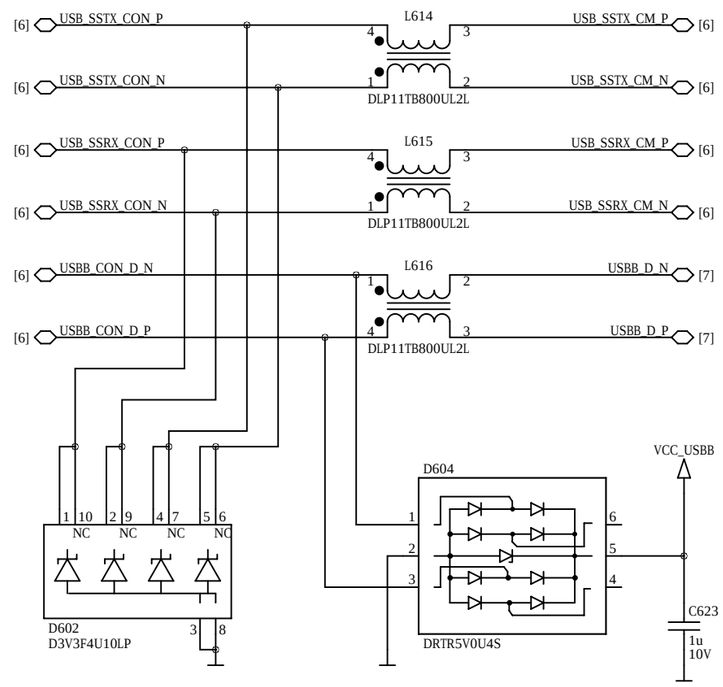

USB Micro B Connector

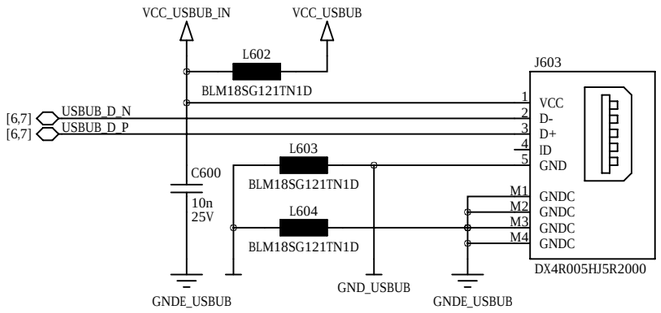

USB Micro B ESD Protection

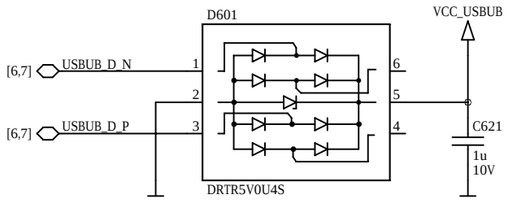

ENCLUSTRA	Copyright	© 2023 by Enclustra GmbH	Sheet Name	6_USB_CONNECTORS	Customer No	0000	Revision	R4.8	DNE = do not equip	Confidential
	Company	Enclustra FPGA Solution Center	Project	Mercury PE1	Project No	423	Designed	MHEI	Date 9 Jan 2024	Sheet/sheets 6 / 23

USB 2.0 Hub

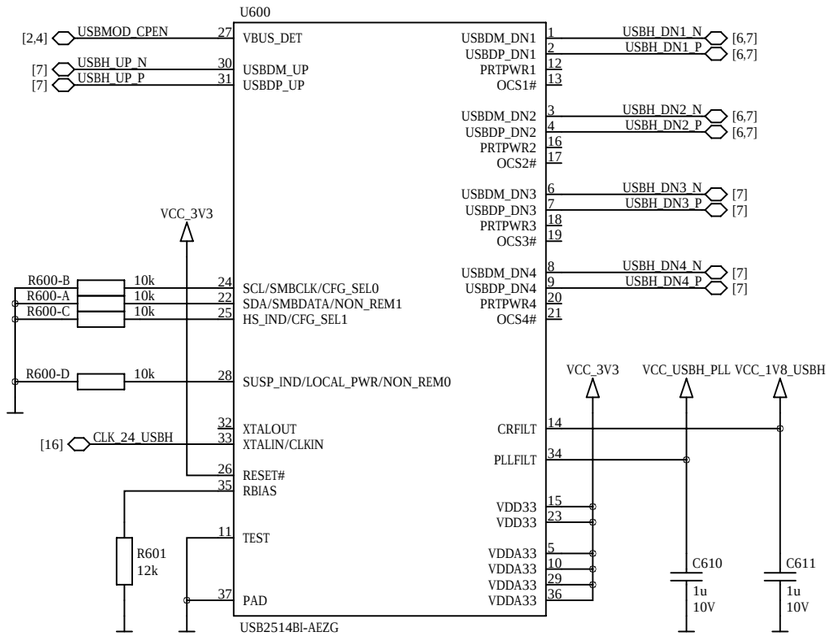

USB Multiplexers

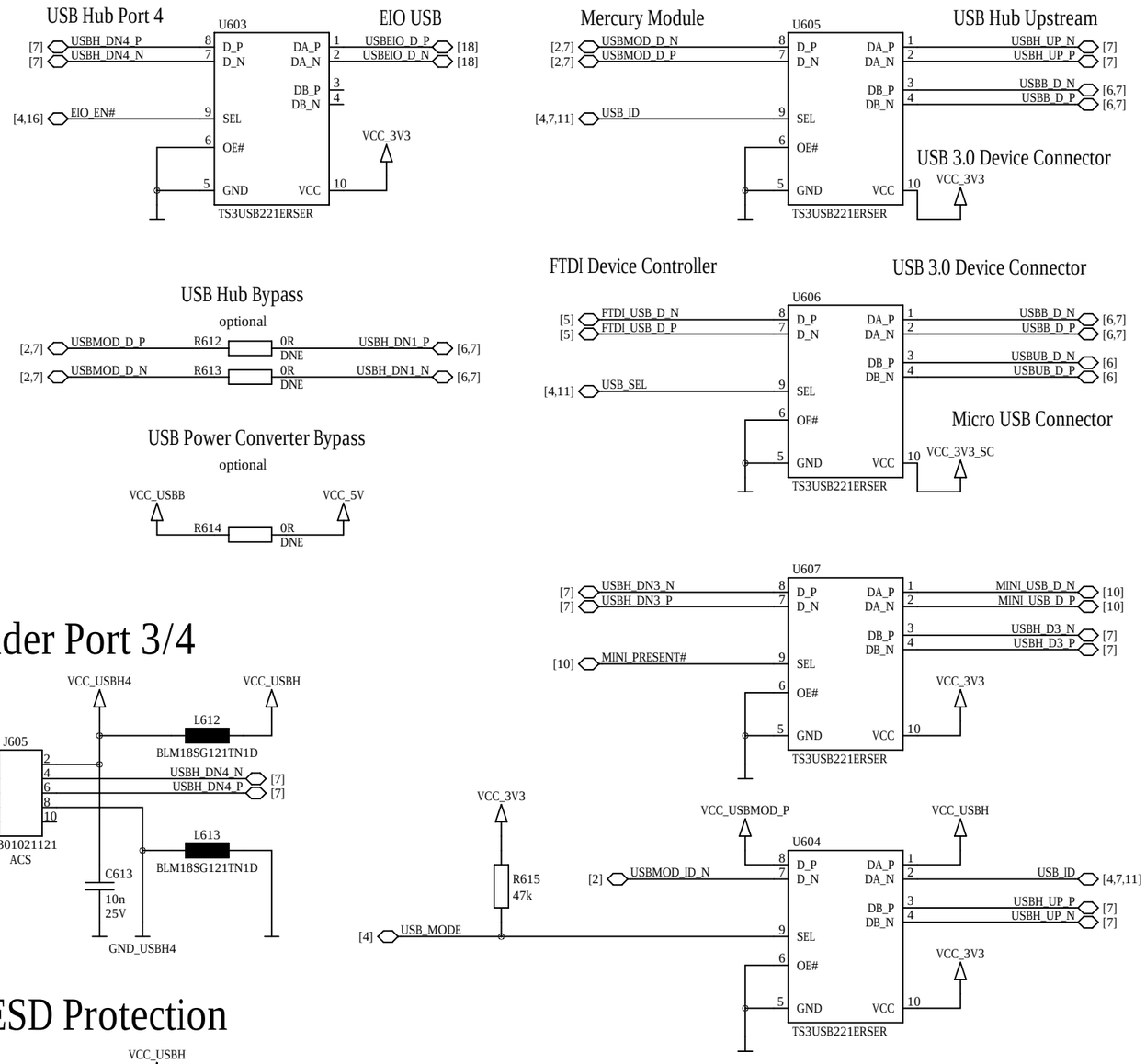

USB Header Port 1/2

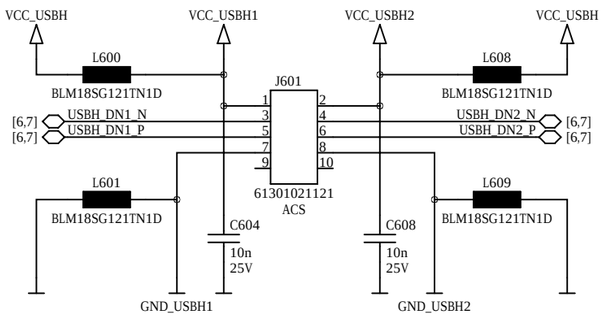

USB Header Port 3/4

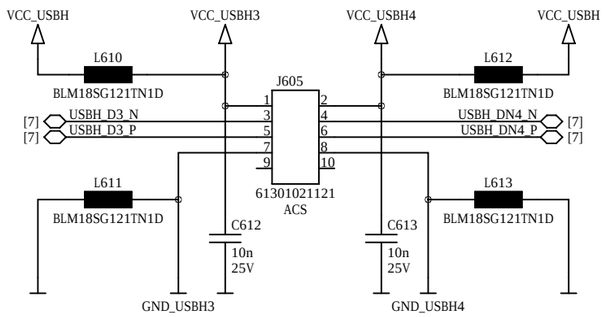

USB 2.0 Hub Decoupling

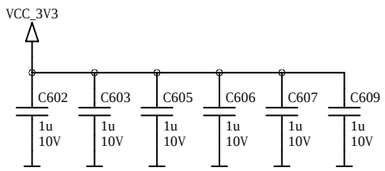

USB Header ESD Protection

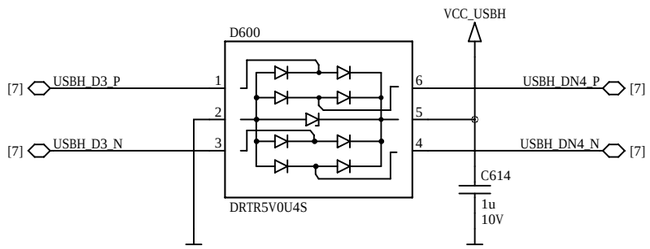

ENCLUSTRA	Copyright	© 2023 by Enclustra GmbH	Sheet Name	7_USB_HUB_MULTIPLEXERS	Customer No	0000	Revision	R4.8	DNE = do not equip	Confidential
	Company	Enclustra FPGA Solution Center	Project	Mercury PE1	Project No	423	Designed	MHEI	Date 9 Jan 2024	Sheet/sheets 7 / 23

Gigabit Ethernet Port 0

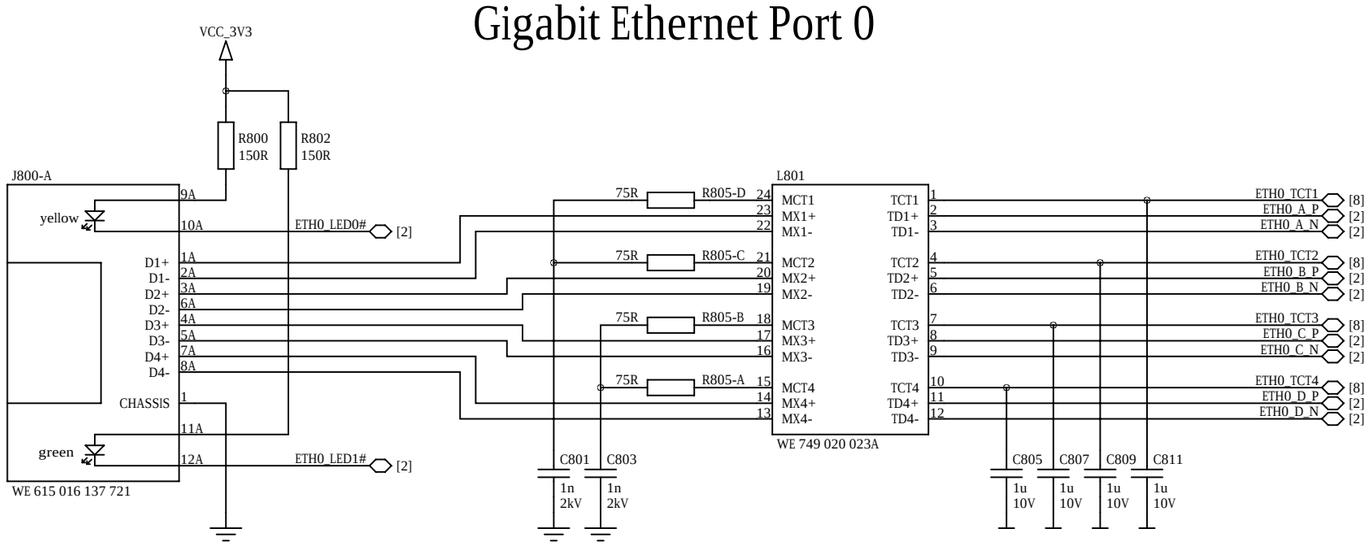

Magnetics Center Tap Port 0

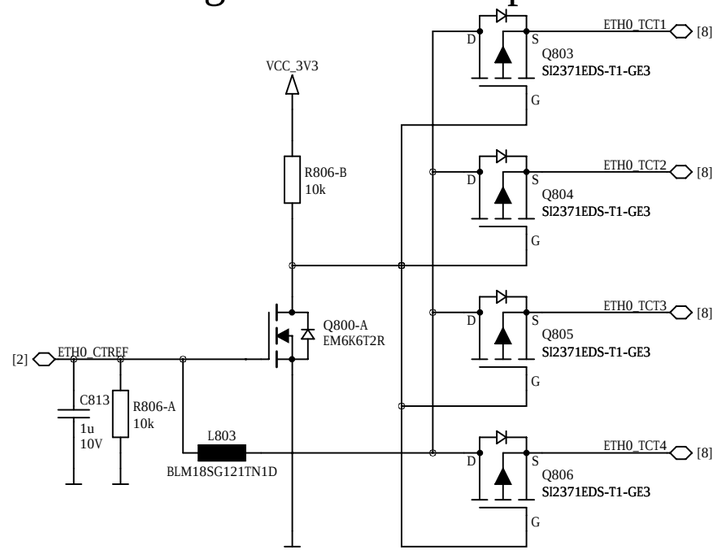

Gigabit Ethernet Port 1

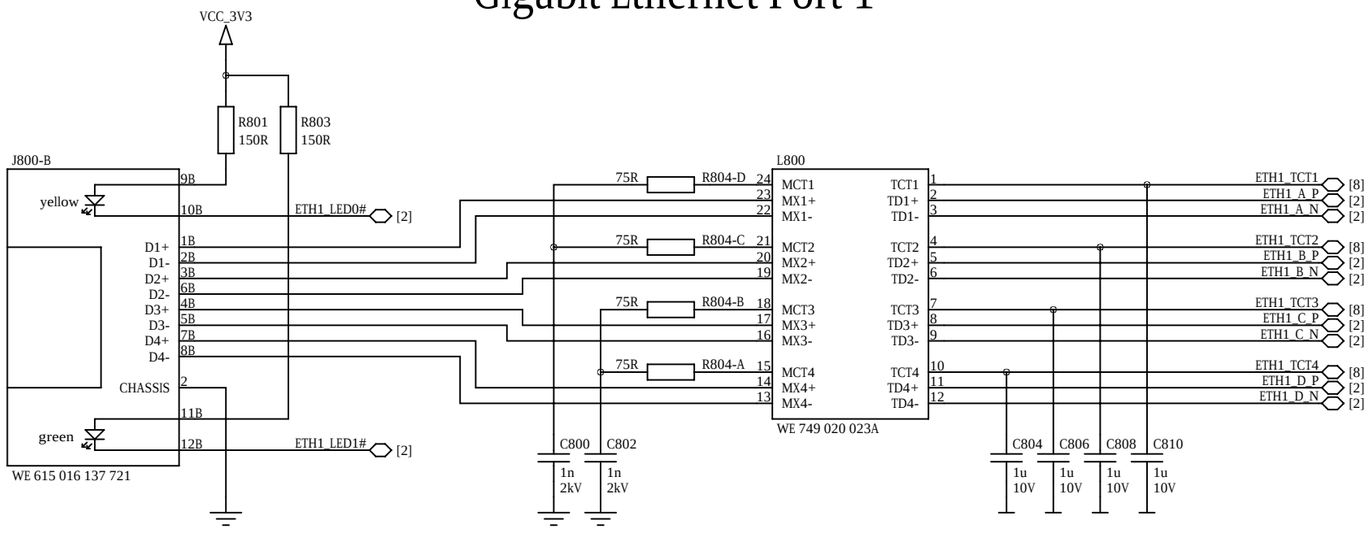

Magnetics Center Tap Port 1

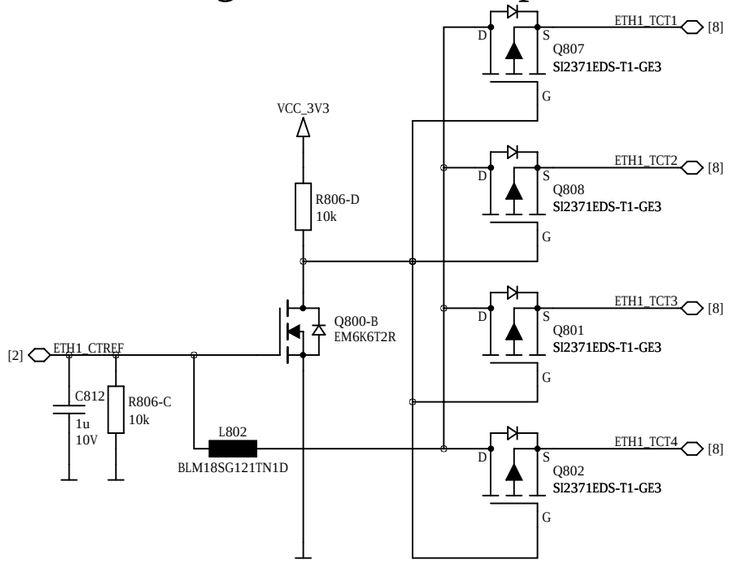

ENCLUSTRA	Copyright © 2023 by Enclustra GmbH	Sheet Name 8_DUAL_GIGABIT_ETHERNET	Customer No 0000	Revision R4.8	DNE = do not equip	Confidential	
	Company Enclustra FPGA Solution Center	Project Mercury PE1	Project No 423	Designed MHEI	Date 9 Jan 2024	Sheet/sheets 8 / 23	

SDIO Level Shifter

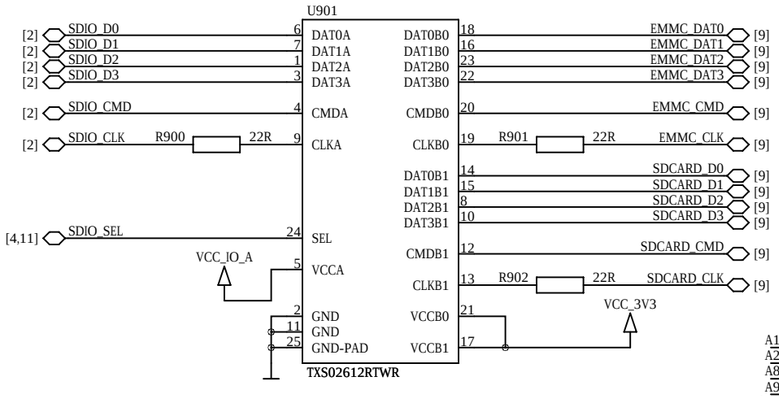

Micro SD-Card Slot

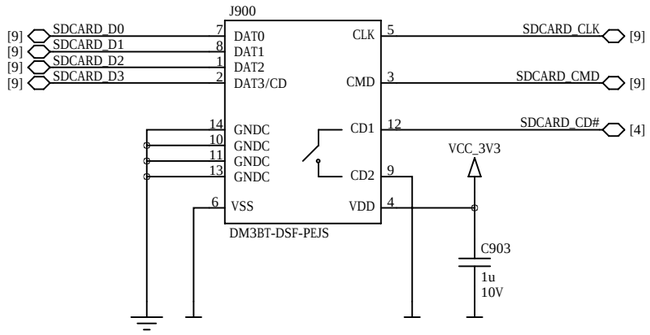

eMMC Managed NAND Flash

optional in some configurations

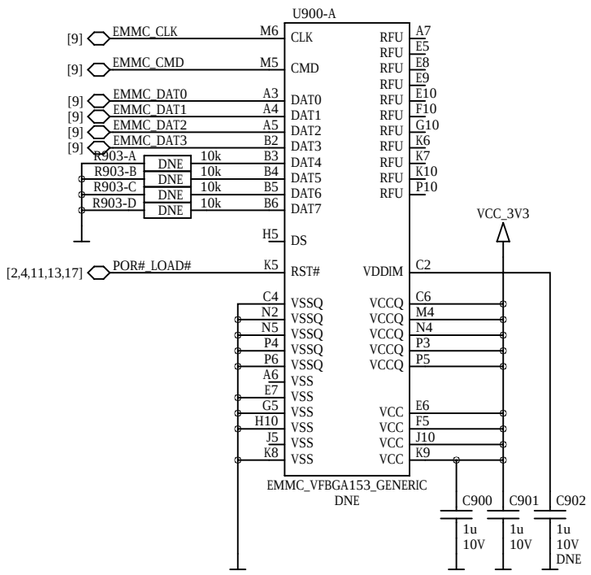

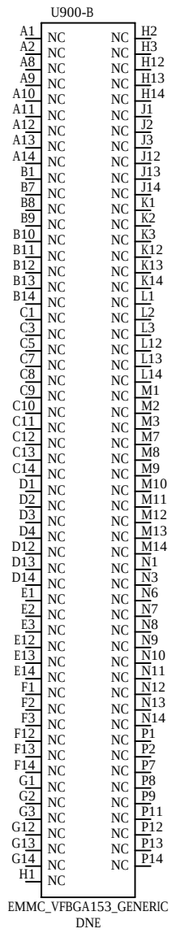

User EEPROM

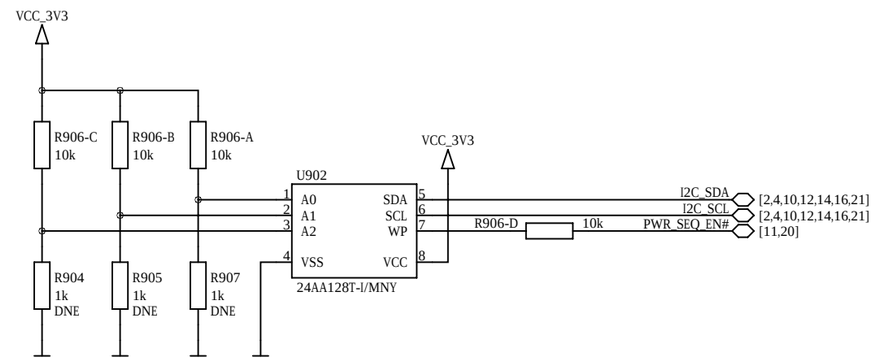

I2C Address: 1 0 1 0 1 1 1 Rw

ENCLUSTRA	Copyright	© 2023 by Enclustra GmbH	Sheet Name	9_SDCARD_EEPROM_EMMC	Customer No	0000	Revision	R4.8	DNE = do not equip	Confidential
	Company	Enclustra FPGA Solution Center	Project	Mercury PE1	Project No	423	Designed	MHEI	Date 9 Jan 2024	Sheet/sheets 9 / 23

PCIe Mini / Mini SATA Card Holder

optional in some configurations

By default USB only. PCIe and SATA optional.

1.5V is not supported.

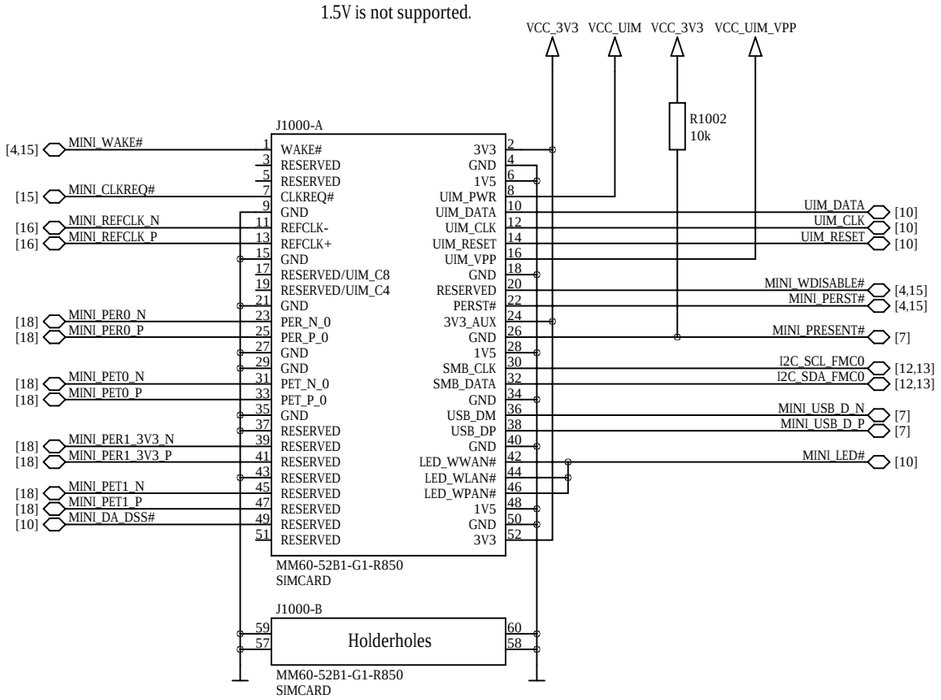

Mini Card Activity LED

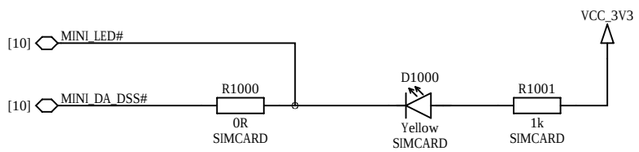

SIM Smart Card Slot

optional

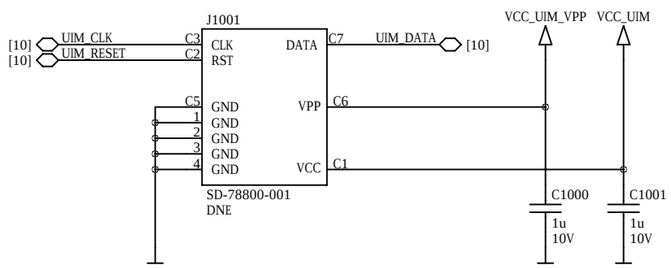

Accelerometer / Magnetometer / Temperature Sensor

optional in some configurations

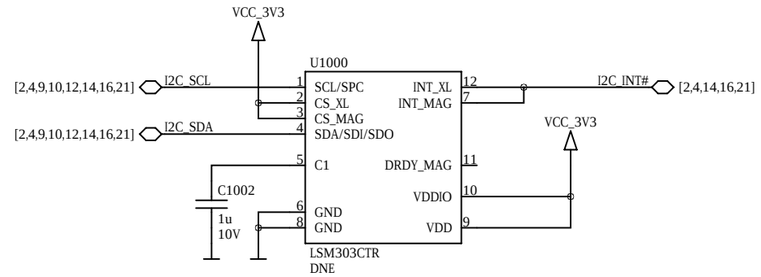

I2C Addresses

Accelerometer: 0 0 1 1 1 0 1 Rw

Magnetometer: 0 0 1 1 1 1 0 Rw

Secure EEPROMs

optional

for Enclustra use only

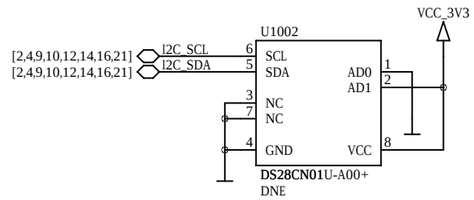

I2C Address: 1 0 1 0 1 0 0 Rw

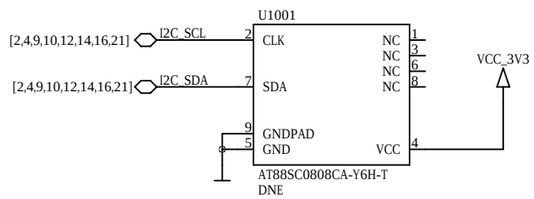

I2C Address: 0 0 0 1 X 1 1 Rw

ENCLUSTRA	Copyright	© 2023 by Enclustra GmbH	Sheet Name	10_MINI_CARD_SENSOR	Customer No	0000	Revision	R4.8	DNE = do not equip	Confidential
	Company	Enclustra FPGA Solution Center	Project	Mercury PE1	Project No	423	Designed	MHEI	Date 9 Jan 2024	Sheet/sheets 10 / 23

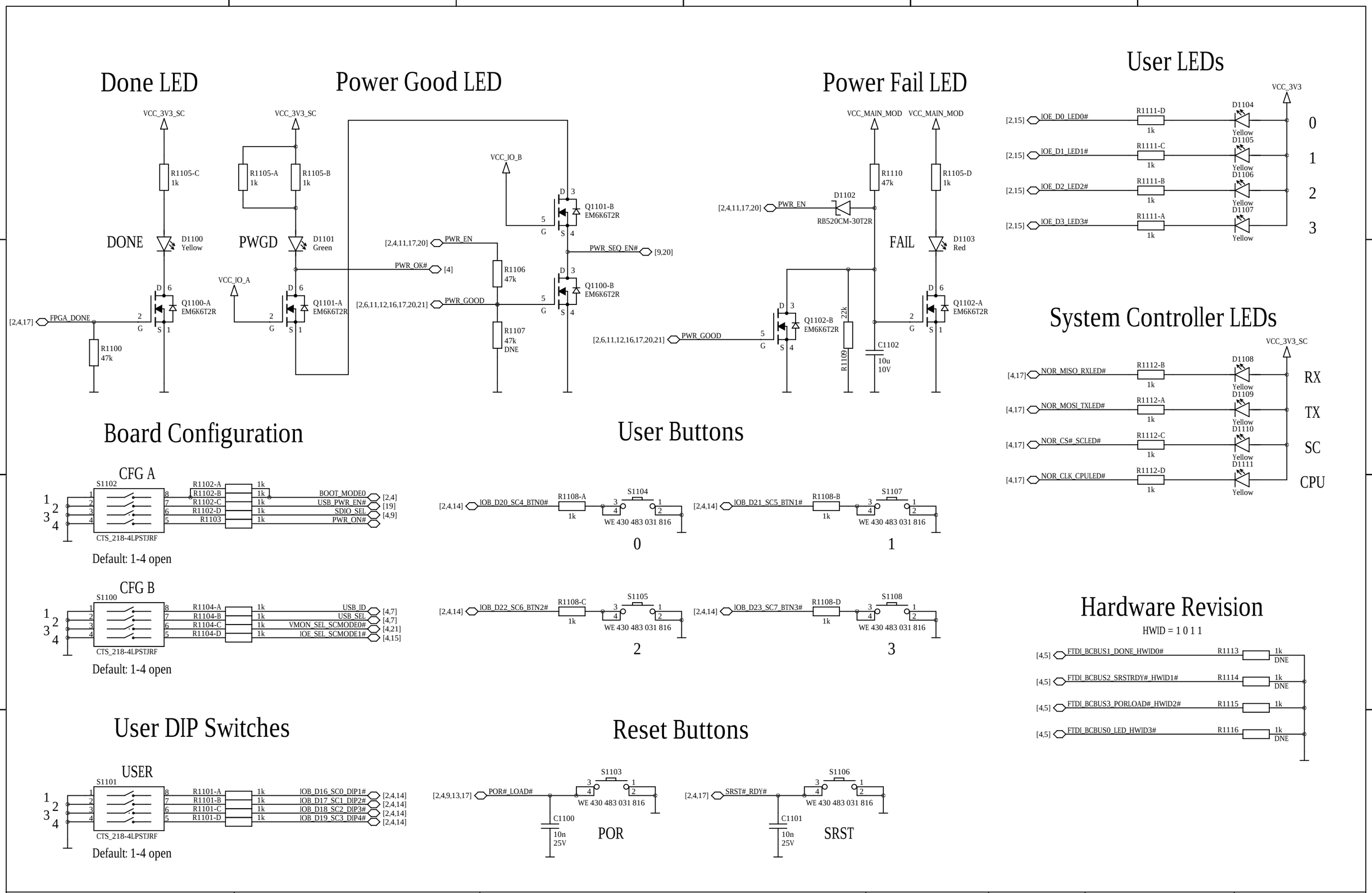

ENCLUSTRA	Copyright © 2023 by Enclustra GmbH	Sheet Name 11_USER_INTERFACE	Customer No 0000	Revision R4.8	DNE = do not equip	Confidential
	Company Enclustra FPGA Solution Center	Project Mercury PE1	Project No 423	Designed MHEI	Date 9 Jan 2024	Sheet/sheets 11 / 23

FMC HPC/LPC Connector 0

optional in some configurations

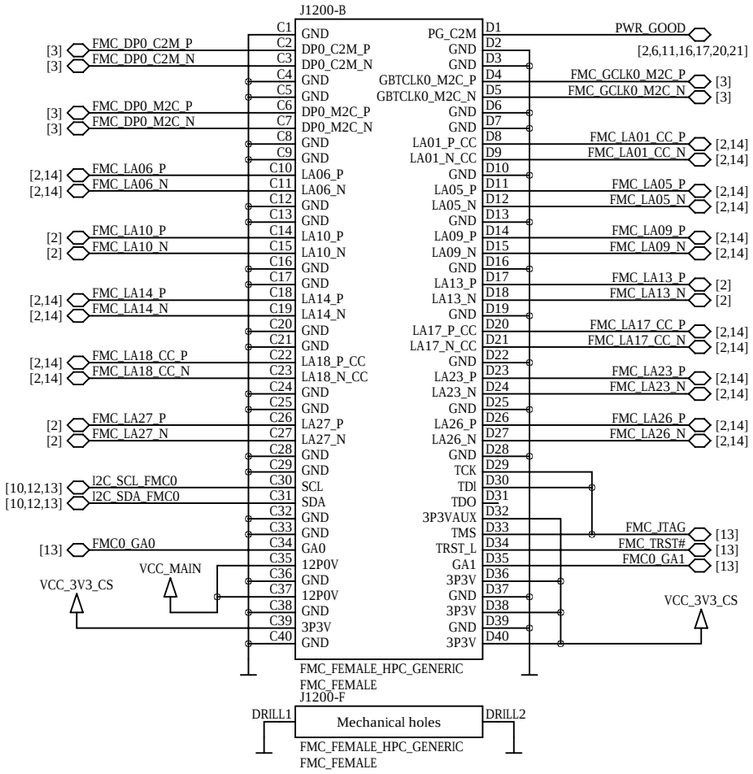

FMC I2C Bus

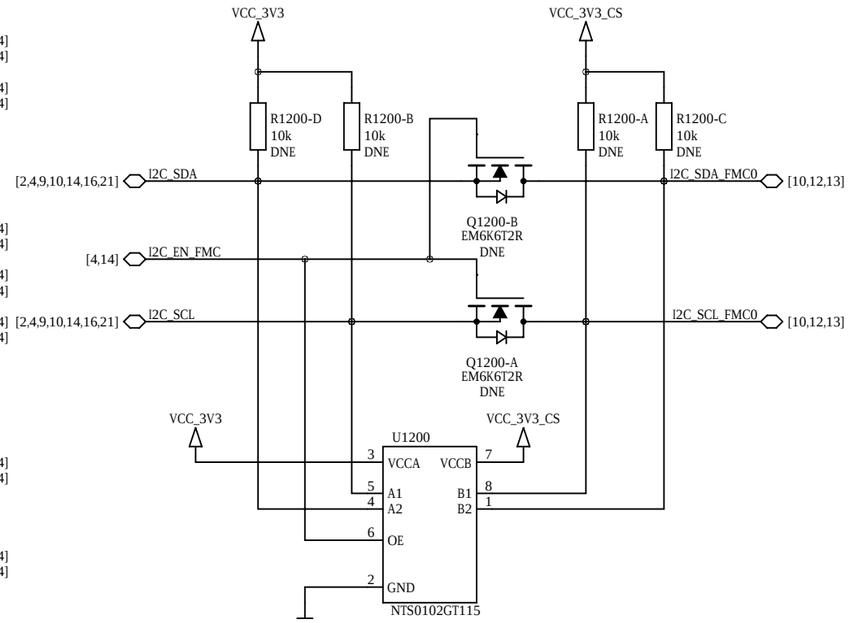

FMC HPC Connector 0

optional in some configurations

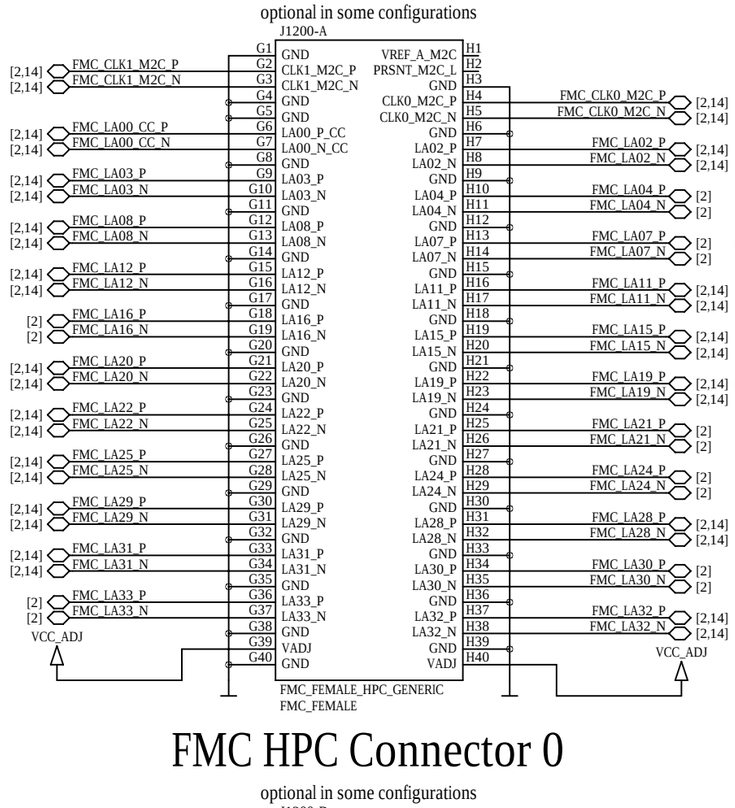

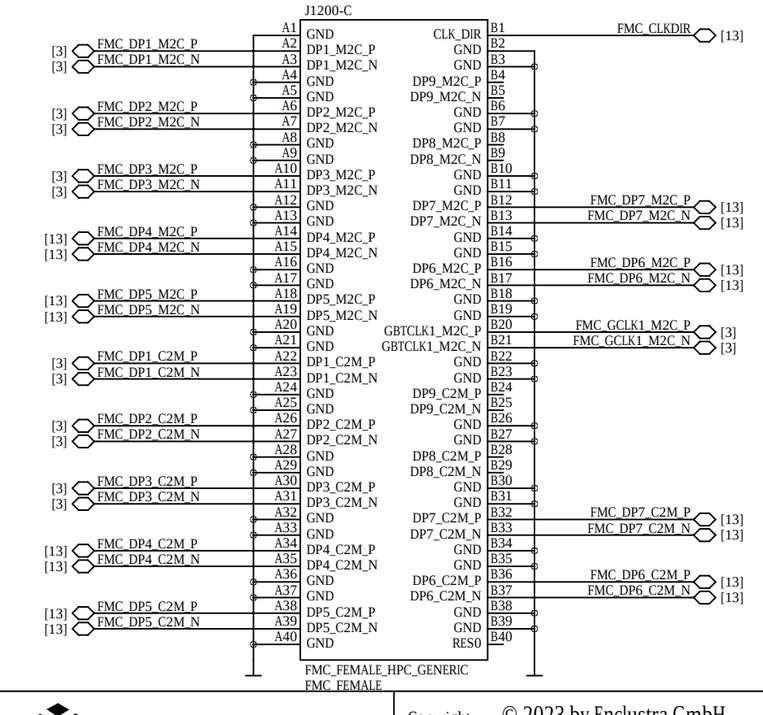

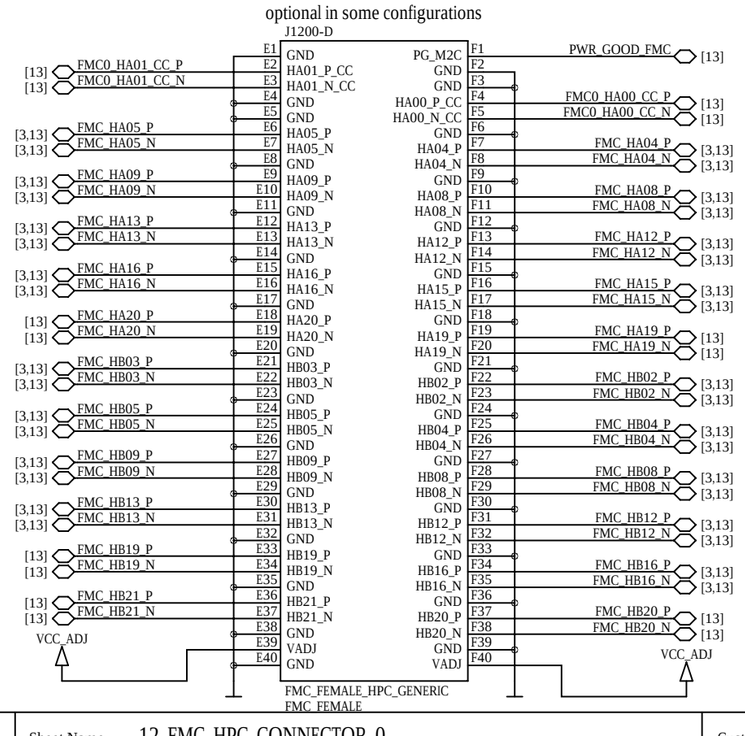

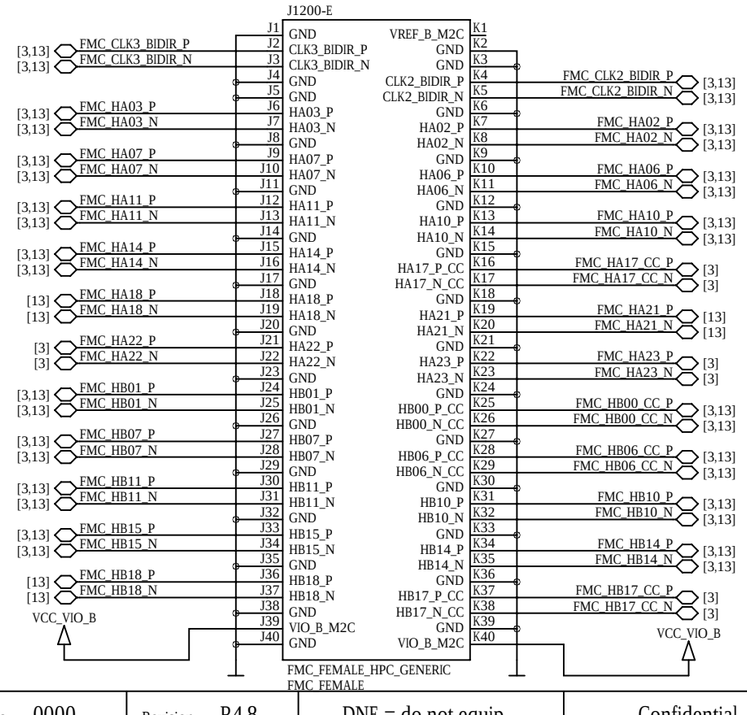

ENCLUSTRA	Copyright	© 2023 by Enclustra GmbH	Sheet Name	12_FMC_HPC_CONNECTOR_0	Customer No 0000	Revision R4.8	DNE = do not equip	Confidential
	Company	Enclustra FPGA Solution Center	Project	Mercury PE1	Project No 423	Designed MHEI	Date 9 Jan 2024	Sheet/sheets 12 / 23

FMC LPC Connector 1

optional in some configurations

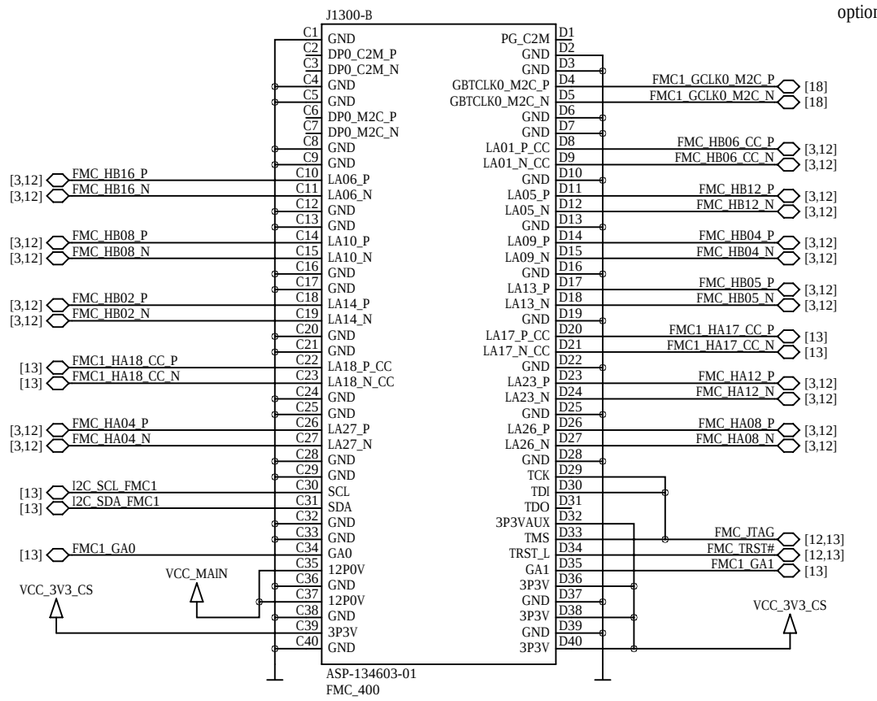

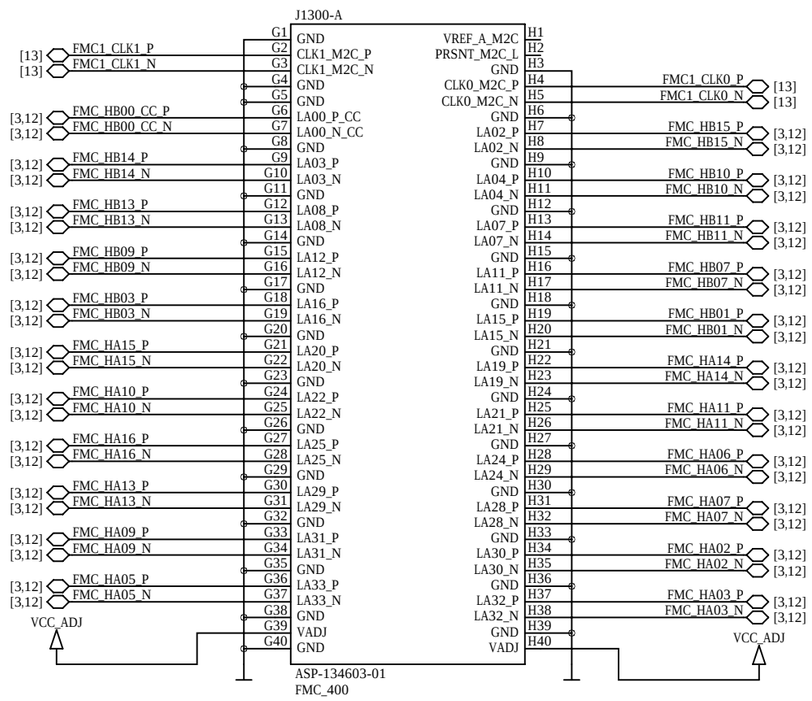

Signal Reordering

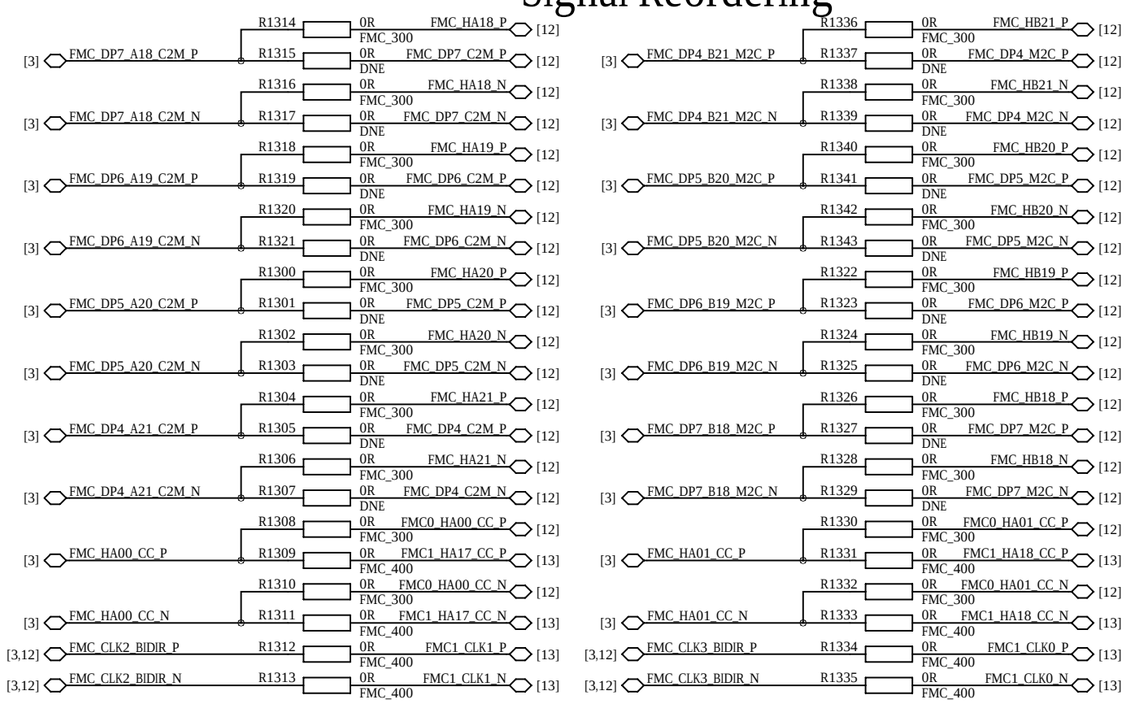

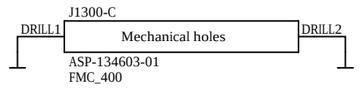

FMC Power

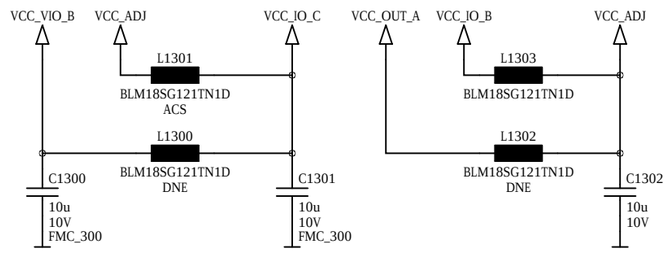

FMC Infos

suggested connector for FMC HPC modules: ASP-134488-01

suggested connector for FMC LPC modules: ASP-134604-01

FMC Miscellaneous

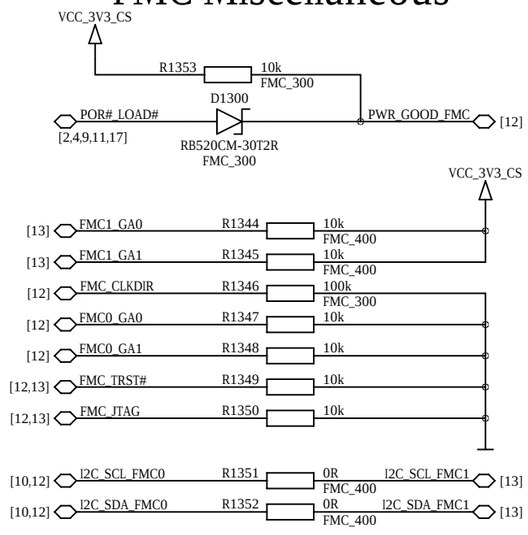

Anios IO Connector A

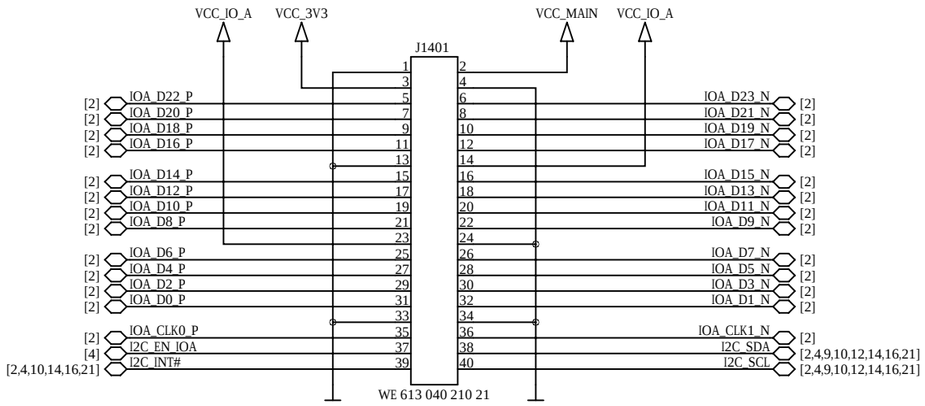

Anios IO Connector B

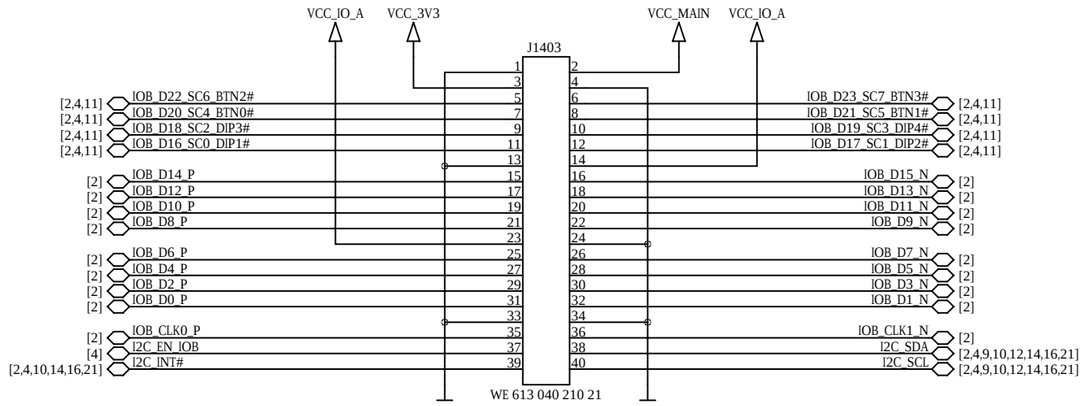

Anios IO Connector F

optional, shared with FMC connector

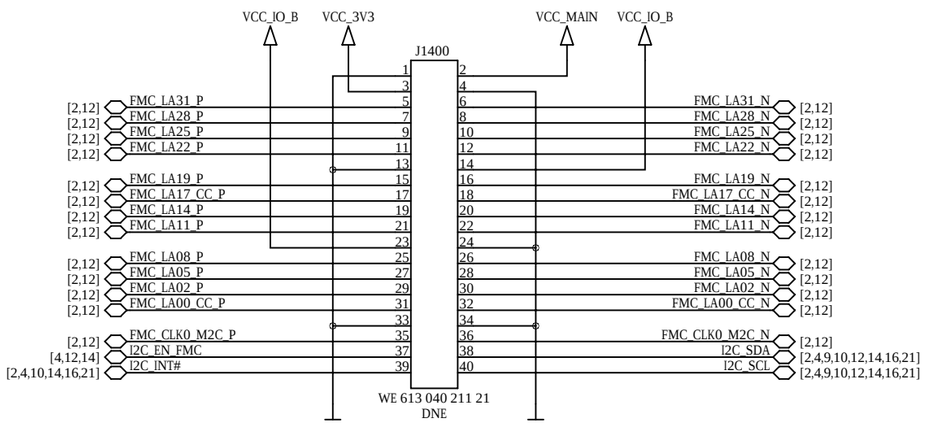

Anios IO Connector G

optional, shared with FMC connector

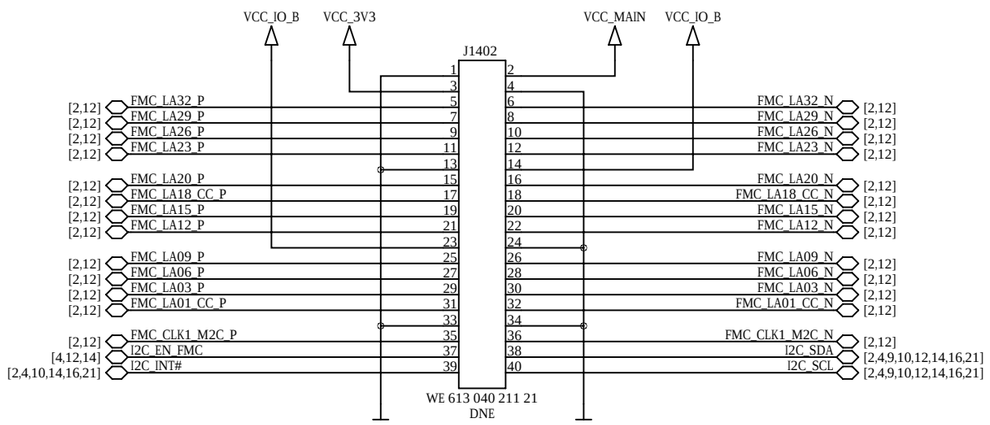

PMOD IO Connector C

This connector is Digilent Pmod™ Compatible when VCC_IO_B is 3.3V

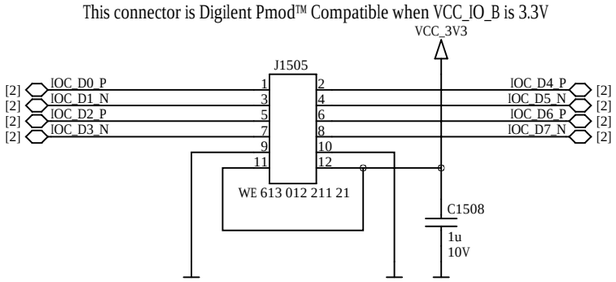

PMOD IO Connector D

This connector is Digilent Pmod™ Compatible when VCC_IO_B is 3.3V

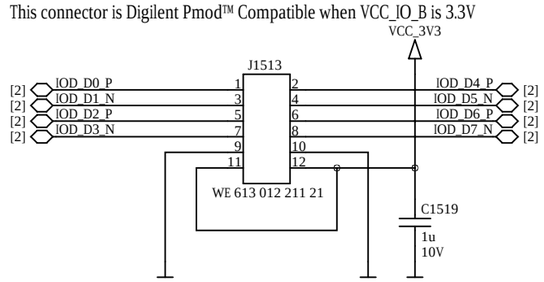

Level Shifter IO E

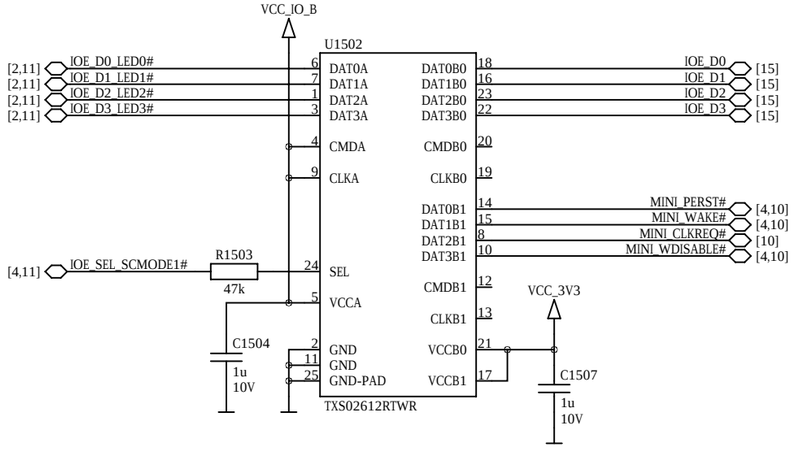

PMOD IO Connector E

This connector is Digilent Pmod™ Compatible

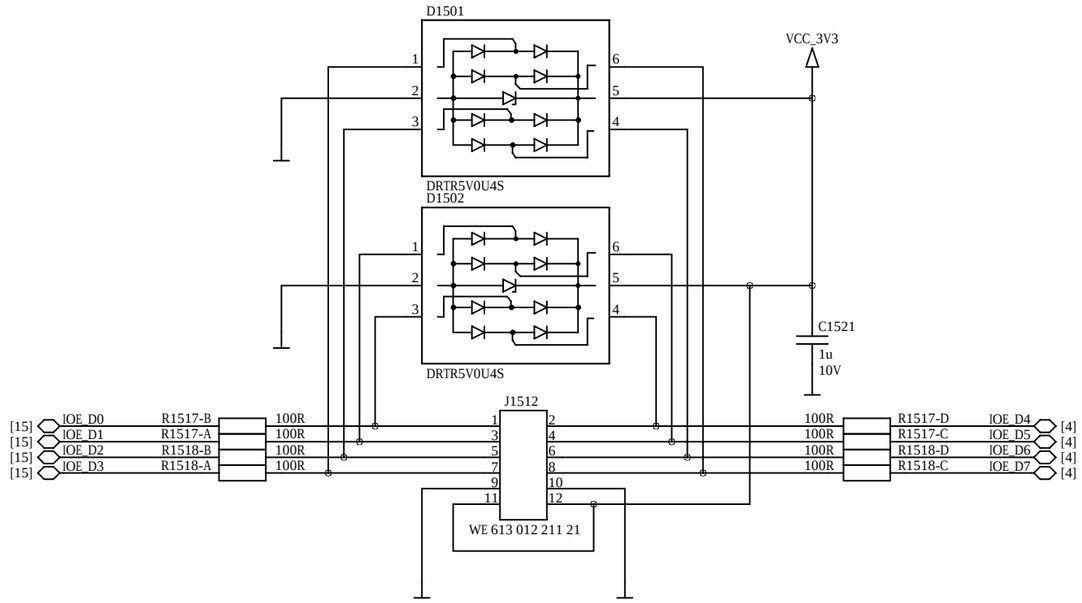

ENCLUSTRA	Copyright	© 2023 by Enclustra GmbH	Sheet Name	15_PMOD_IO_CONNECTORS	Customer No	0000	Revision	R4.8	DNE = do not equip	Confidential
	Company	Enclustra FPGA Solution Center	Project	Mercury PE1	Project No	423	Designed	MHEI	Date 9 Jan 2024	Sheet/sheets 15 / 23

Clock Generator

Configuration must be implemented over I2C at startup.

Generates up to four LVDS/HCSL/LVCMOS clocks of up to 350 MHz.

NVM OTP configuration memory can only be written once and doing so voids the board warranty.

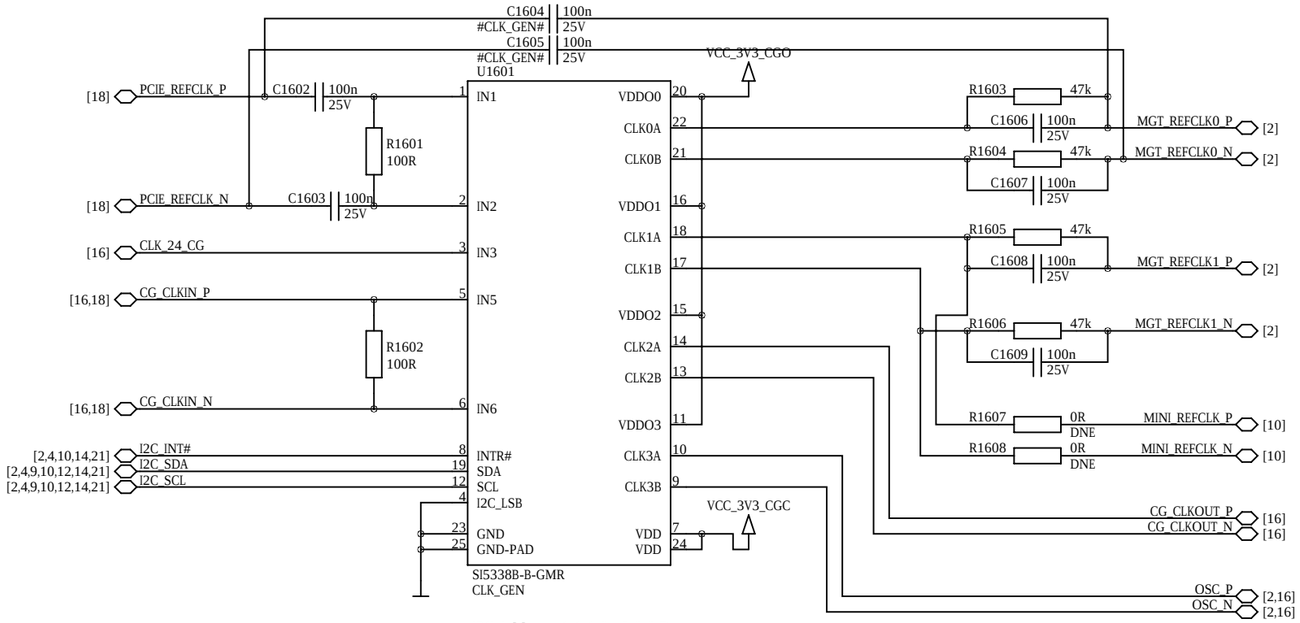

I2C Address: 1 1 1 0 0 0 0 Rw

Clock Multiplexers

optional in some configurations

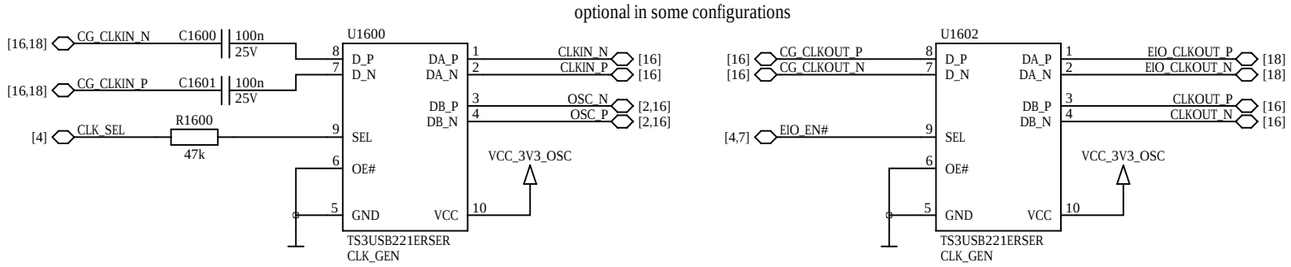

Clock SMA Connectors

optional

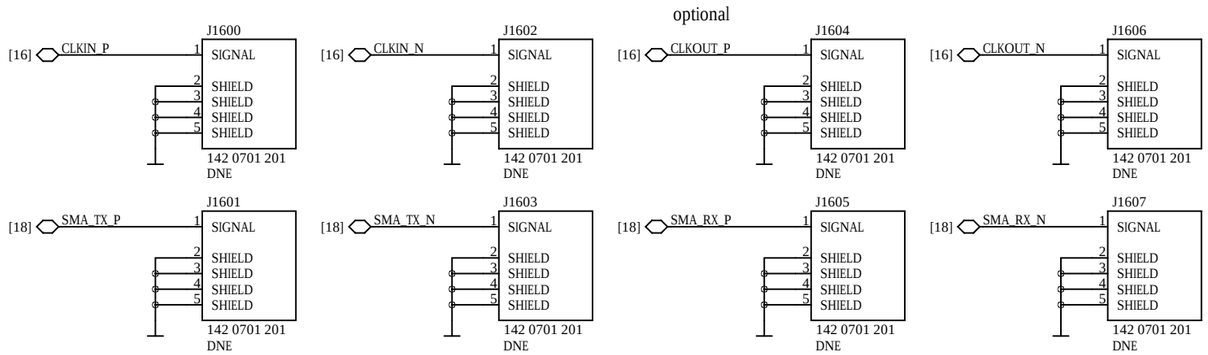

Oscillator

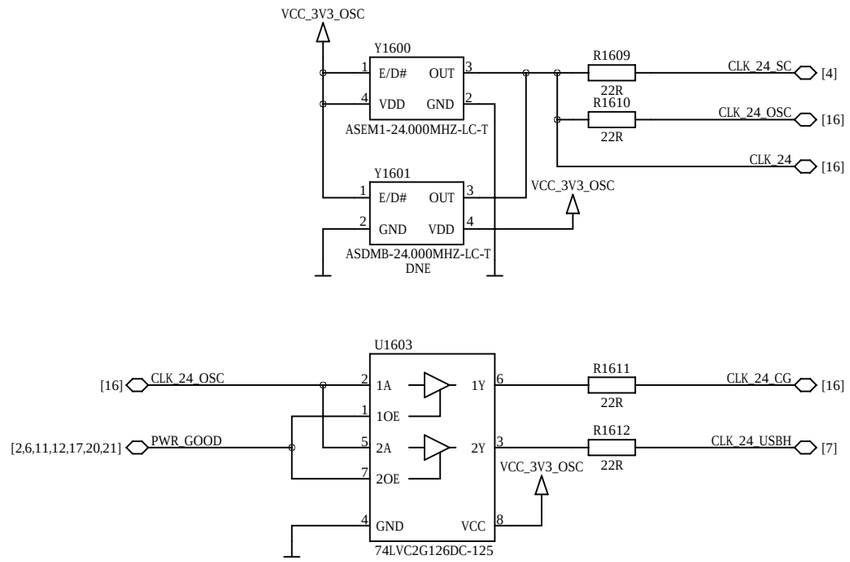

Clock Divider

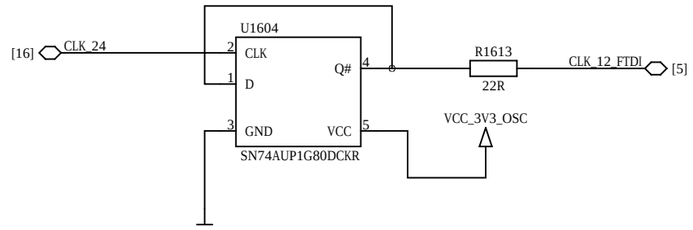

Clock Generator Power Filters

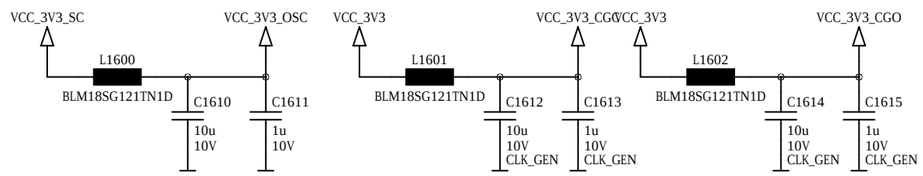

ENCLUSTRA	Copyright	© 2023 by Enclustra GmbH	Sheet Name	16_OSCILLATOR_CLOCK_GENERATOR	Customer No	0000	Revision	R4.8	DNE = do not equip	Confidential
	Company	Enclustra FPGA Solution Center	Project	Mercury PE1	Project No	423	Designed	MHEI	Date 9 Jan 2024	Sheet/sheets 16 / 23

Xilinx JTAG Connector

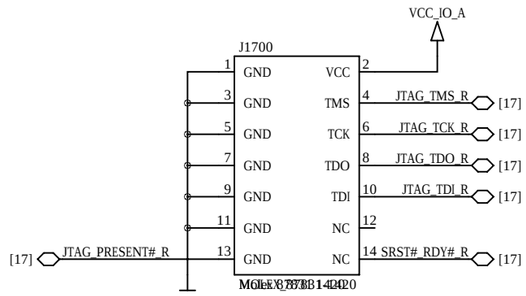

Altera JTAG Connector

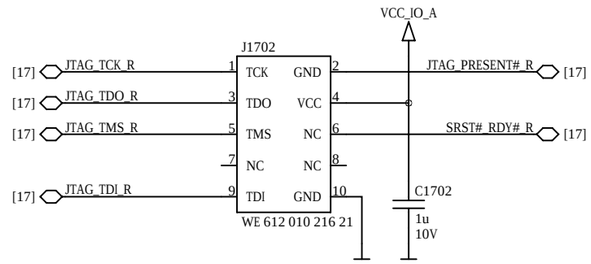

JTAG ESD Protection

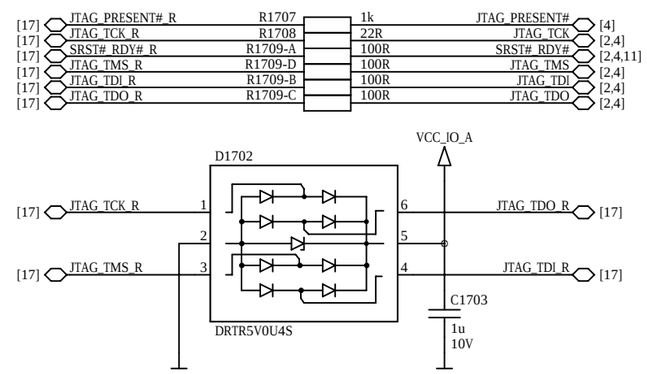

Control Connector

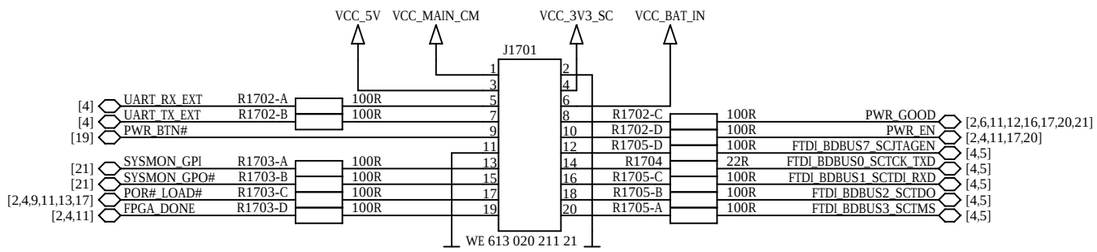

Battery Holder

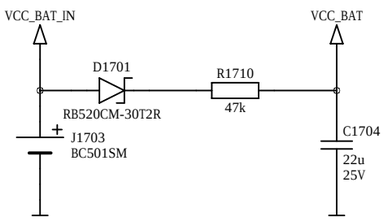

SPI NOR Flash

optional

pin compatible with Altera EPCS/EPCQ and Micron N25Q series

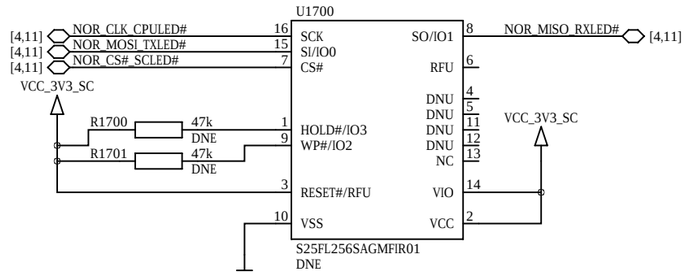

Reset Circuit

D1700, C1701 only needed when not using System Controller

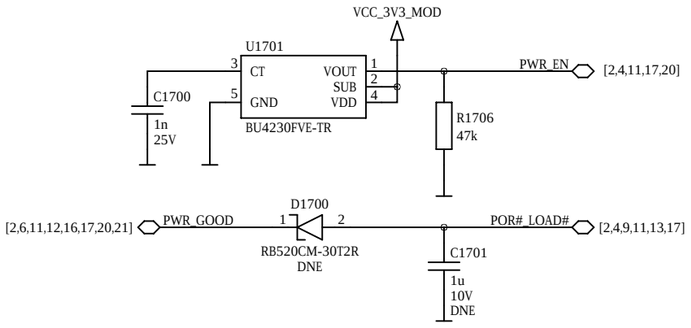

Battery

optional

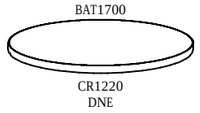

ENCLUSTRA	Copyright	© 2023 by Enclustra GmbH	Sheet Name	17_JTAG_BATTERY_CTRL_NOR_RESET	Customer No	0000	Revision	R4.8	DNE = do not equip	Confidential
	Company	Enclustra FPGA Solution Center	Project	Mercury PE1	Project No	423	Designed	MHEI	Date 9 Jan 2024	Sheet/sheets 17 / 23

PCIe x4 Edge Connector

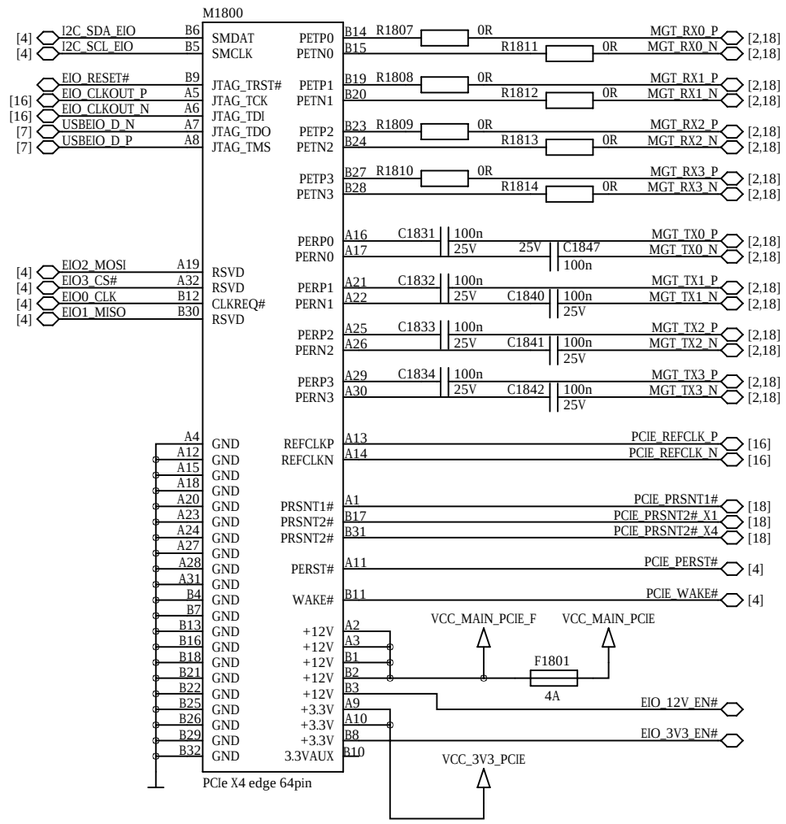

Edge IO Power

not included in user schematics

This part is intentionally left blank.

PCIe Present

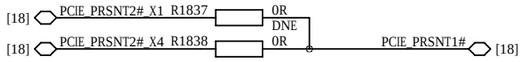

FMC MGT Signals

optional

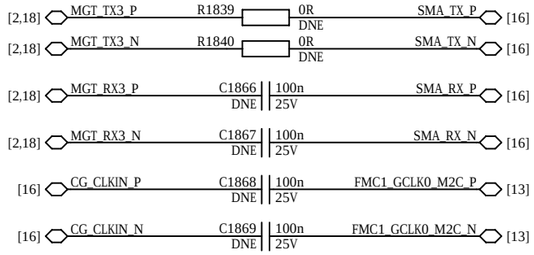

Mini PCIe / Mini SATA Card Signals

optional

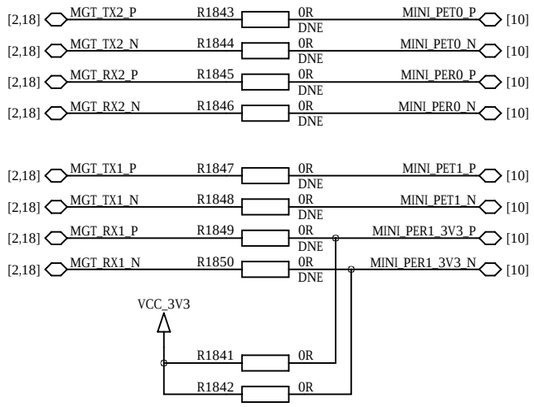

MGT Loopback

optional

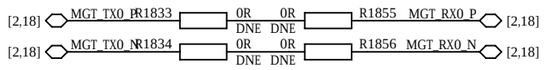

ENCLUSTRA	Copyright © 2023 by Enclustra GmbH	Sheet Name 18_PCIE_CONNECTOR	Customer No 0000	Revision R4.8	DNE = do not equip	Confidential
	Company Enclustra FPGA Solution Center	Project Mercury PE1	Project No 423	Designed MHEI	Date 9 Jan 2024	Sheet/sheets 18 / 23

External Power Input

12V 2.5A

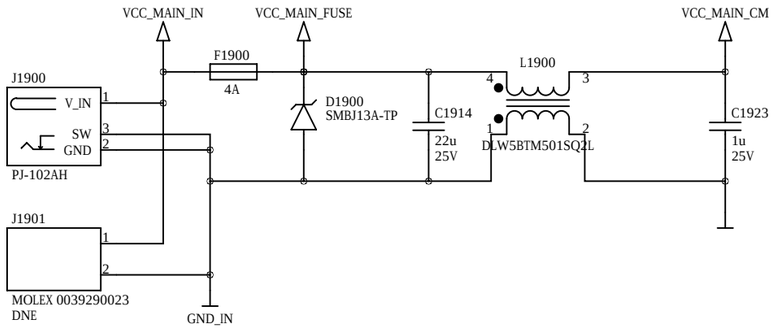

Power Slide Switch

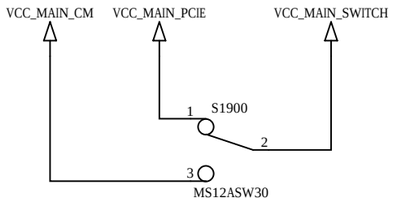

Default: 1-2

Power Input Control

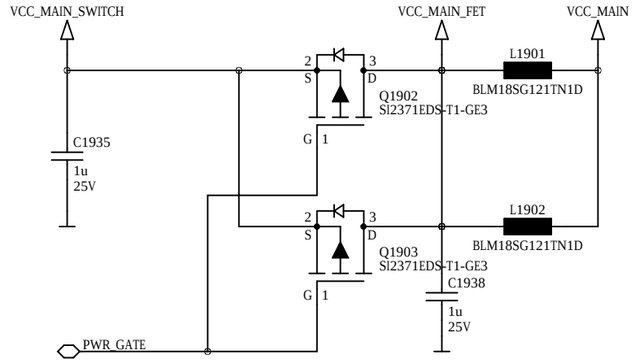

Internal Power Input

12V 4A

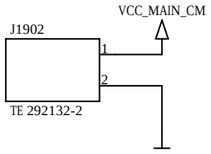

USB Power Input Control

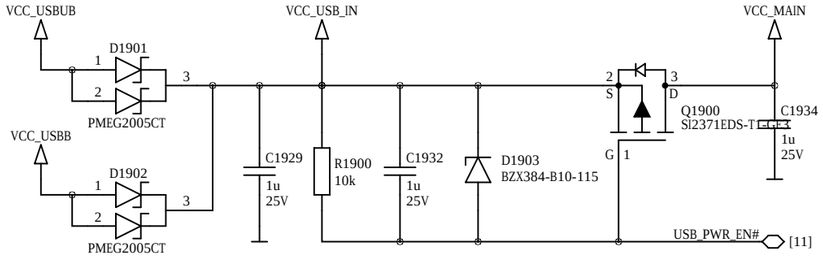

Power Switch Control

not included in user schematics

This part is intentionally left blank.

Power Decoupling

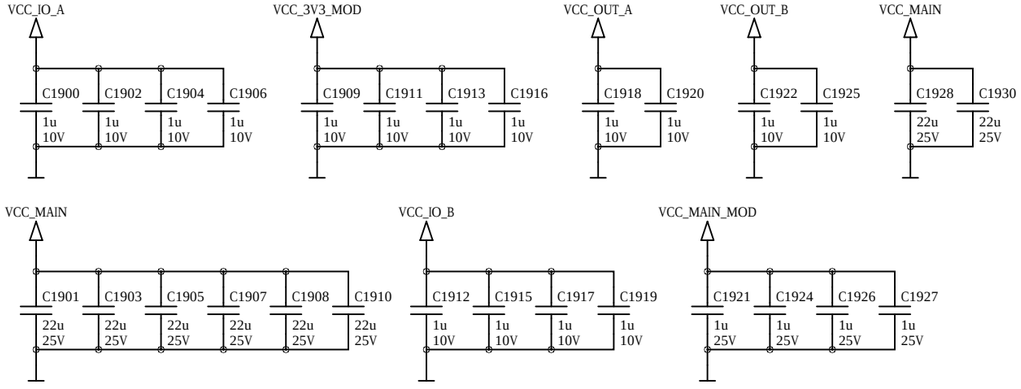

LDO 3V3 to 1V8 0.15A

Vfb = 1V2

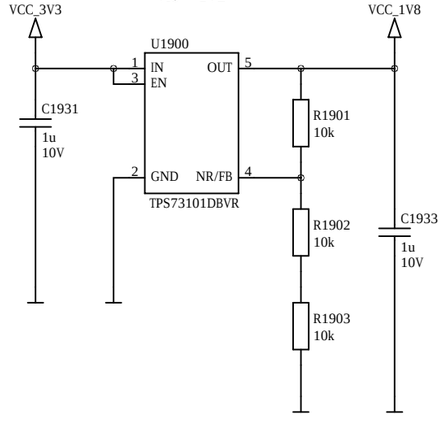

Power Button

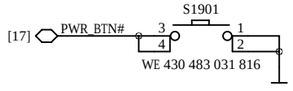

ENCLUSTRA	Copyright	© 2023 by Enclustra GmbH	Sheet Name	19_POWER_INPUT_CONTROL	Customer No	0000	Revision	R4.8	DNE = do not equip	Confidential
	Company	Enclustra FPGA Solution Center	Project	Mercury PE1	Project No	423	Designed	MHEI	Date 9 Jan 2024	Sheet/sheets 19 / 23

Step-Down Converter 12V to 5V 3A

Vfb = 0.8V fs = 500kHz

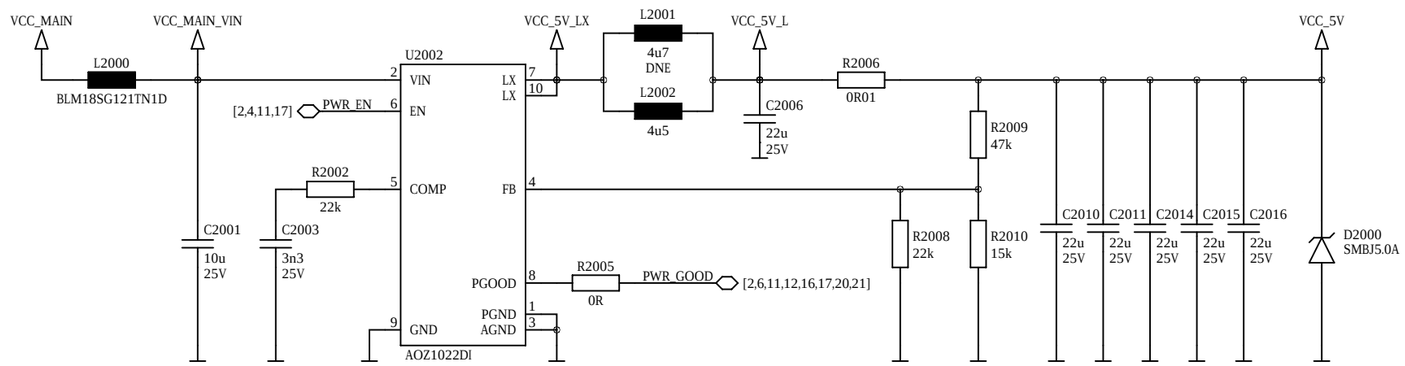

Do not touch feedback and compensation network during operation!

When using power over USB, remove R2005

IO Voltage Select

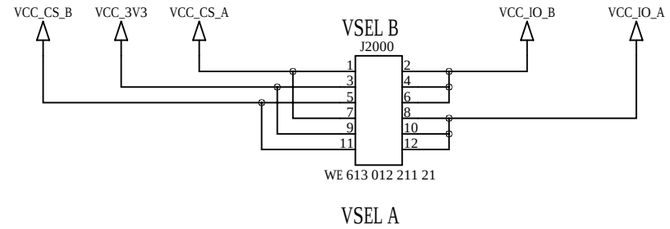

Default Jumpers: 2-4, 8-10

The jumpers need to be set correctly for the users application respecting the modules supported IO voltage ranges.

Analog Current Sensors

Gain 100V/V

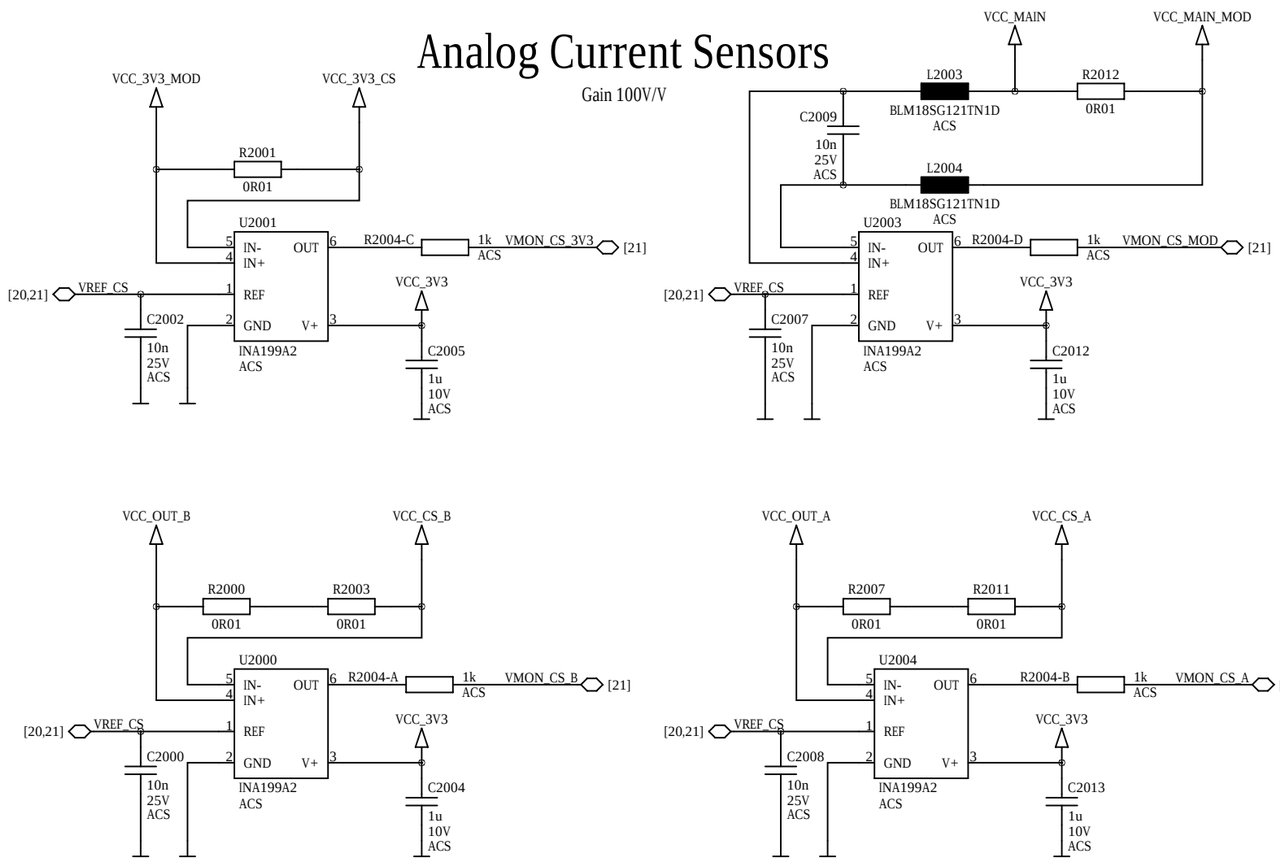

Power Sequencing

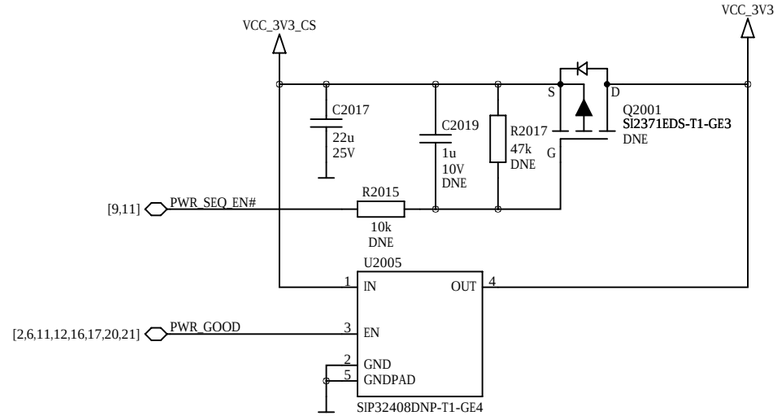

Current Sense Reference

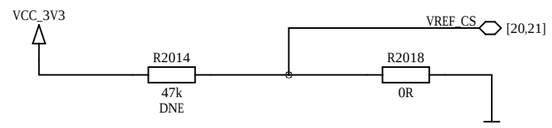

USB VBUS Control

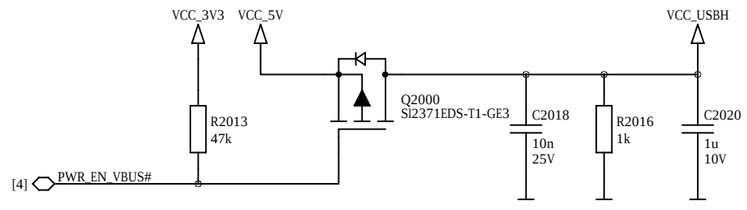

System Monitor Voltage Sense

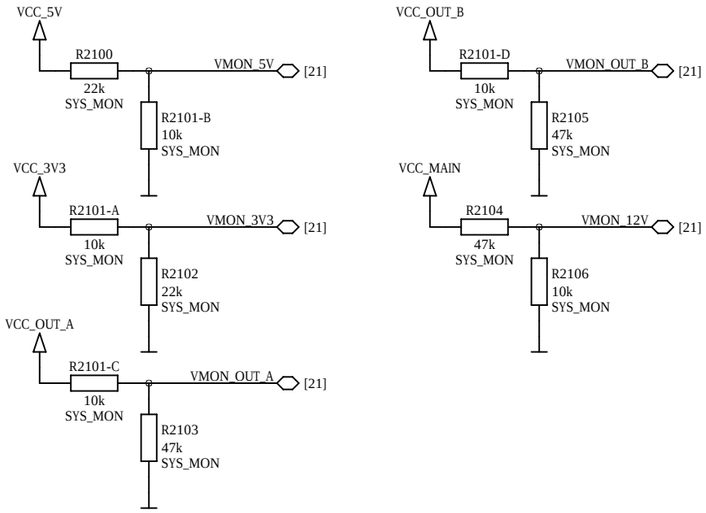

System Monitor

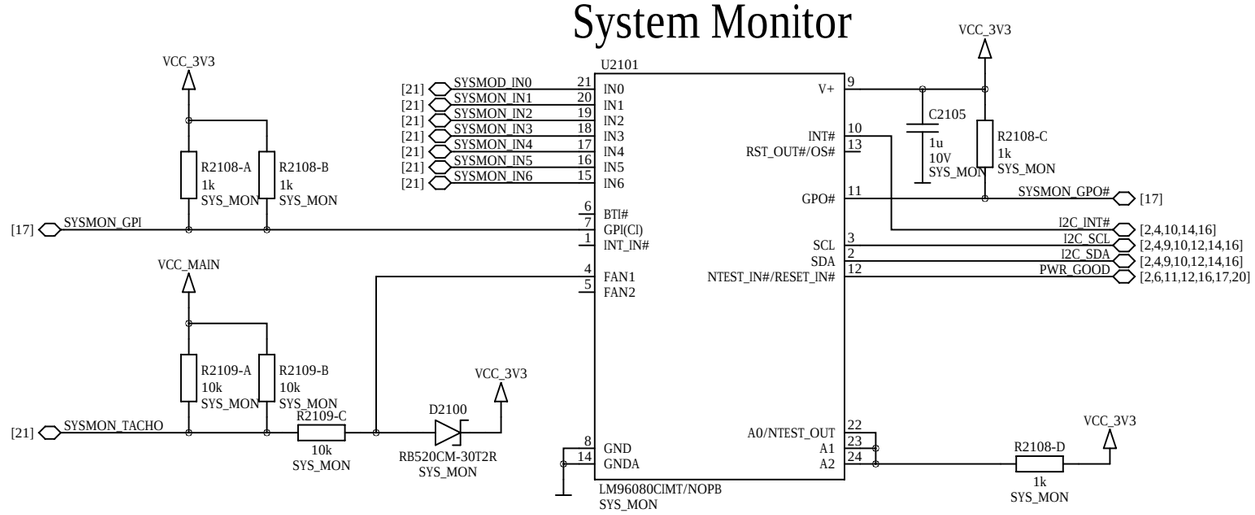

I2C Address: 0 1 0 1 1 1 1 Rw

Fan Connector

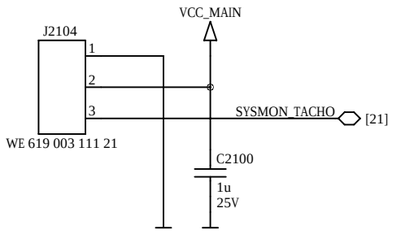

System Monitor Analog Multiplexers

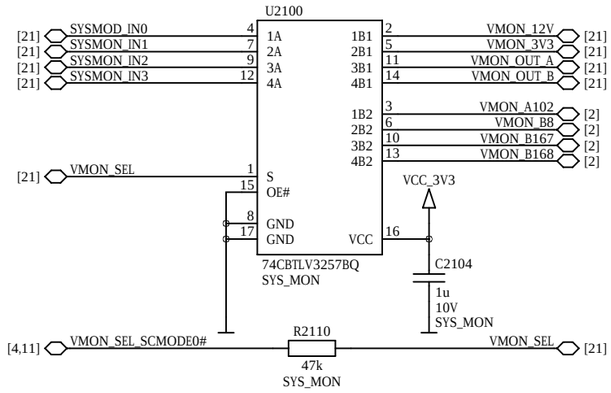

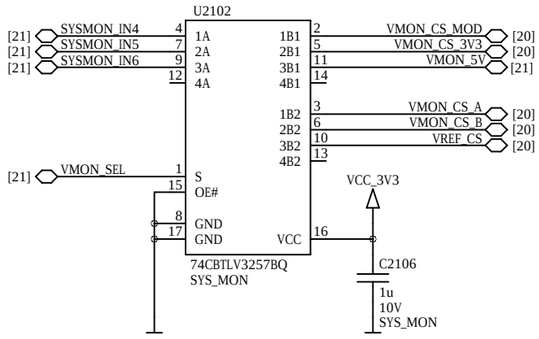

ENCLUSTRA	Copyright	© 2023 by Enclustra GmbH	Sheet Name	21_SYSTEM_MONITOR	Customer No	0000	Revision	R4.8	DNE = do not equip	Confidential
	Company	Enclustra FPGA Solution Center	Project	Mercury PE1	Project No	423	Designed	MHEI	Date 9 Jan 2024	Sheet/sheets 21 / 23

Ground Test Points

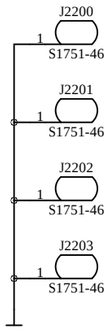

Chassis Ground

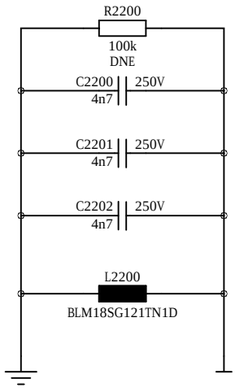

Board Mounting Holes M3

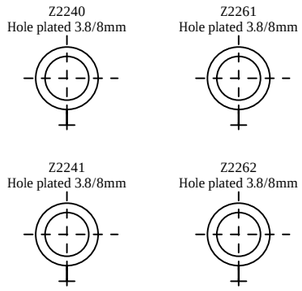

Board Spacers

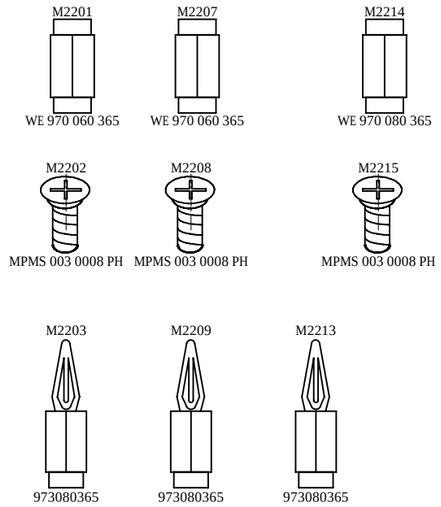

Fiducials

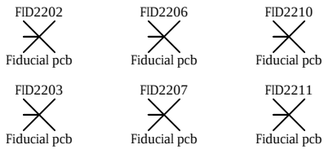

PCB

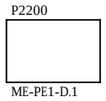

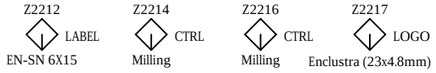

PCIe Bracket

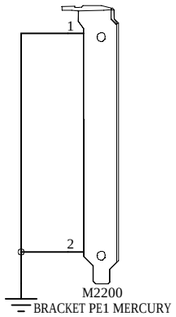

Mini Card Mounting

optional

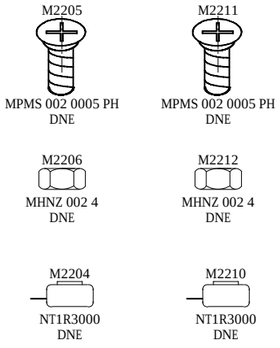

Panel Fiducials

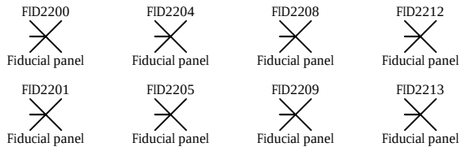

Module Pin-1 Marking

Connector Pin-1 Marking

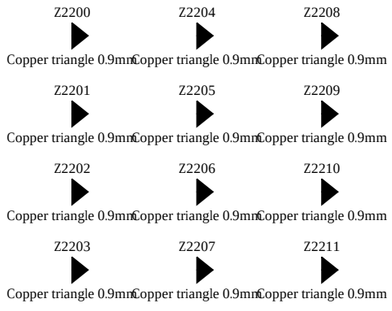

Module Mounting Holes M3

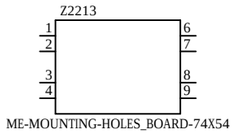

Text

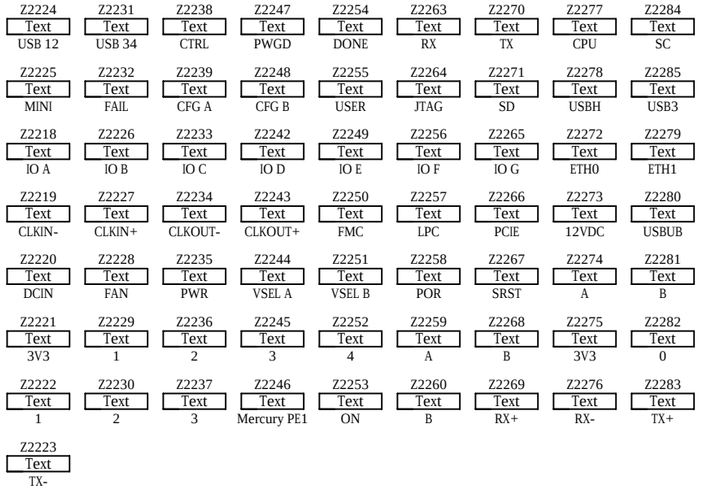

ENCLUSTRA	Copyright © 2023 by Enclustra GmbH	Sheet Name 22_MECHANICS	Customer No 0000	Revision R4.8	DNE = do not equip	Confidential
	Company Enclustra FPGA Solution Center	Project Mercury PE1	Project No 423	Designed MHEI	Date 9 Jan 2024	Sheet/sheets 22 / 23

Component Variants

CPLD	SYS_MON	FMC	SIMCARD	MOD_CONN	ACS	CLK_GEN	FMC_300	FMC_400
Part U400A LCMXO2-4000HC-6MG132C EN104449 Part U400B LCMXO2-4000HC-6MG132I EN100619	page 21	Part J1200A ASP-134603-01 EN100364 Part J1200B ASP-134486-01 EN101301	page 10	page 3	pages 6, 7, 13 and 20	page 16	page 13	page 13

Assembly Variants

Assembly Variant	CPLD	SYS_MON	FMC	SIMCARD	MOD_CONN	ACS	CLK_GEN	FMC_300	FMC_400
Variant EN105764:0 ME-PE1-200-C-R4.8	Option EN105764:9 CPLD EN104449	Option EN105764:1 SYS_MON DNE	Option EN105764:2 FMC_FEMALE EN100364	Option EN105764:3 SIMCARD DNE	Option EN105764:4 MOD_CONN DNE	Option EN105764:5 ACS DNE	Option EN105764:6 CLK_GEN DNE	Option EN105764:7 FMC_300 DNE	Option EN105764:8 FMC_400 DNE
Variant EN105766:0 ME-PE1-300-W-R4.8	Option EN105766:9 CPLD EN100619	Option EN105766:1 SYS_MON	Option EN105766:2 FMC_FEMALE EN101301	Option EN105766:3 SIMCARD	Option EN105766:4 MOD_CONN	Option EN105766:5 ACS	Option EN105766:6 CLK_GEN	Option EN105766:7 FMC_300	Option EN105766:8 FMC_400 DNE
Variant EN105769:0 ME-PE1-400-W-R4.8	Option EN105769:9 CPLD EN100619	Option EN105769:1 SYS_MON	Option EN105769:2 FMC_FEMALE EN100364	Option EN105769:3 SIMCARD	Option EN105769:4 MOD_CONN	Option EN105769:5 ACS	Option EN105769:6 CLK_GEN	Option EN105769:7 FMC_300 DNE	Option EN105769:8 FMC_400
Variant EN105765:0 ME-PE1-300-C-R4.8	Option EN105765:9 CPLD EN104449	Option EN105765:1 SYS_MON	Option EN105765:2 FMC_FEMALE EN101301	Option EN105765:3 SIMCARD	Option EN105765:4 MOD_CONN	Option EN105765:5 ACS	Option EN105765:6 CLK_GEN	Option EN105765:7 FMC_300	Option EN105765:8 FMC_400 DNE
Variant EN105768:0 ME-PE1-400-C-R4.8	Option EN105768:9 CPLD EN104449	Option EN105768:1 SYS_MON	Option EN105768:2 FMC_FEMALE EN100364	Option EN105768:3 SIMCARD	Option EN105768:4 MOD_CONN	Option EN105768:5 ACS	Option EN105768:6 CLK_GEN	Option EN105768:7 FMC_300 DNE	Option EN105768:8 FMC_400