Enclustra User Schematics

Mercury PE3 Revision 1.1

Disclaimer

User schematics do not include proprietary Enclustra design elements, such as power supply circuits.
These circuits use optimized designs which are extremely compact and remain proprietary to Enclustra.
The user manual provides all necessary information to use the module and its interfaces.

User schematics are provided after purchase of Enclustra hardware, and may also be provided in certain cases before purchase, to assist in product evaluation.
No part of the schematics may be copied or modified without written permission from Enclustra.

Full schematics, including a full bill-of-materials, may be available through the purchase of a hardware licence for the product in question.
Please contact Enclustra Sales for more information.

Note: DNE = Do Not Equip (parts not equipped by default)

© Enclustra GmbH

Mercury+ PE3 Base Board

Revision 1.1

Sheet 1: Cover
Sheet 2: Mercury Module Connectors A | B
Sheet 3: Mercury Module Connectors C
Sheet 4: System Controller
Sheet 5: USB 2.0 Device Controller | 3.3V SC
Sheet 6: USB Connectors
Sheet 7: USB Multiplexers | Redrivers
Sheet 8: USB Type-C Controller
Sheet 9: MGT Routing | Decoupling
Sheet 10: MGT Multiplexers 0-7
Sheet 11: MGT Multiplexers 8-15
Sheet 12: PCI Express x8
Sheet 13: PCIe Redrivers
Sheet 14: FireFly Connector | M.2 Socket
Sheet 15: Ethernet Connectors | HDMI
Sheet 16: FMC Connector
Sheet 17: QSFP+ | Quad SFP+ Interfaces
Sheet 18: Clock Generator
Sheet 19: I2C | SD Card | Digital IO
Sheet 20: Anios Connectors | Reset | JTAG
Sheet 21: User Interface
Sheet 22: Power Input
Sheet 23: Power 1.2V | 3.3V
Sheet 24: Power 1.8V | 5V | 12V
Sheet 25: System Monitor
Sheet 26: Mechanics
Sheet 27: Reserved
Sheet 28: Component Assembly
Sheet 29: Component Assembly

Mercury Module Connector A

Check the user manual for supported modules.

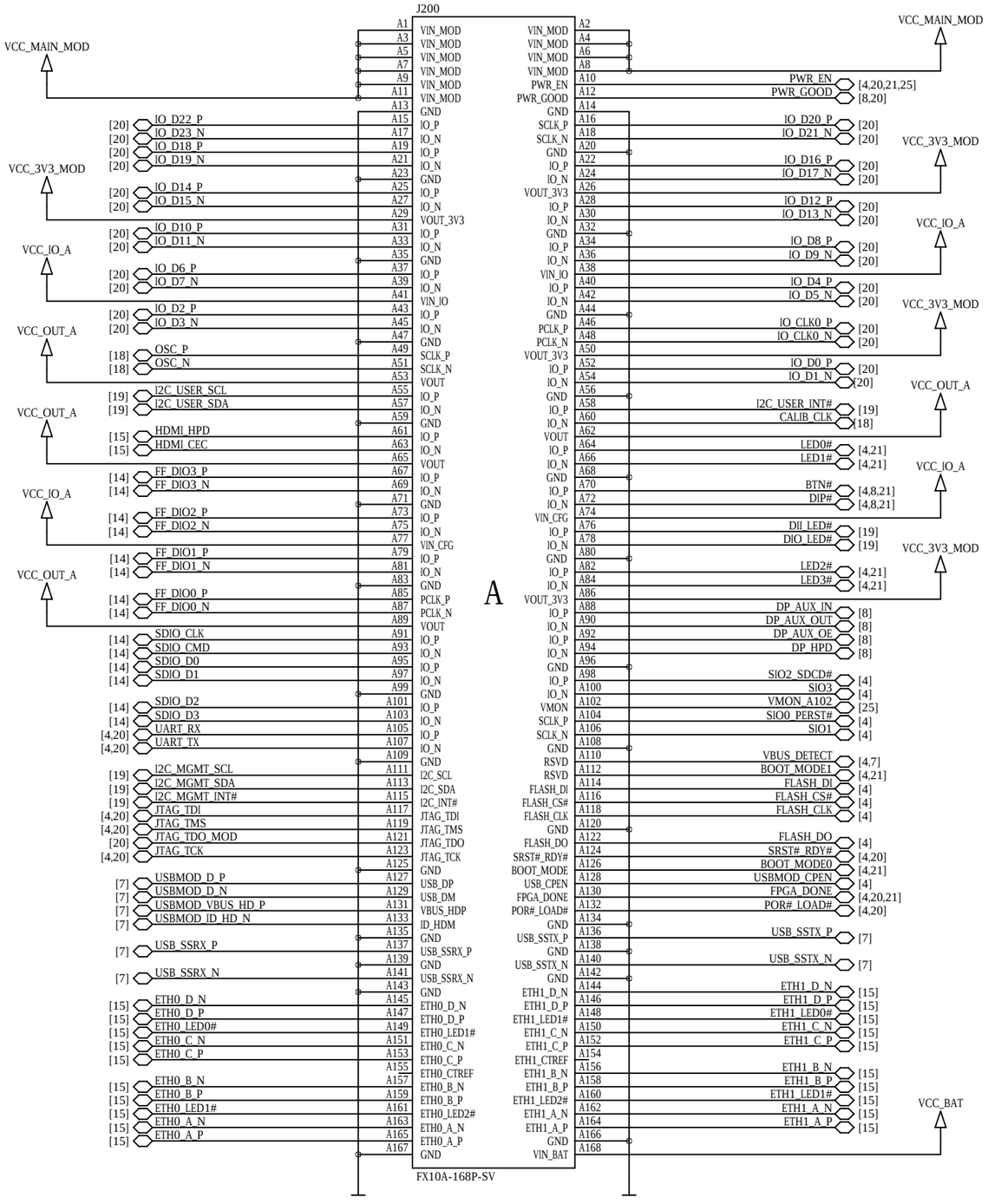

Mercury Module Connector B

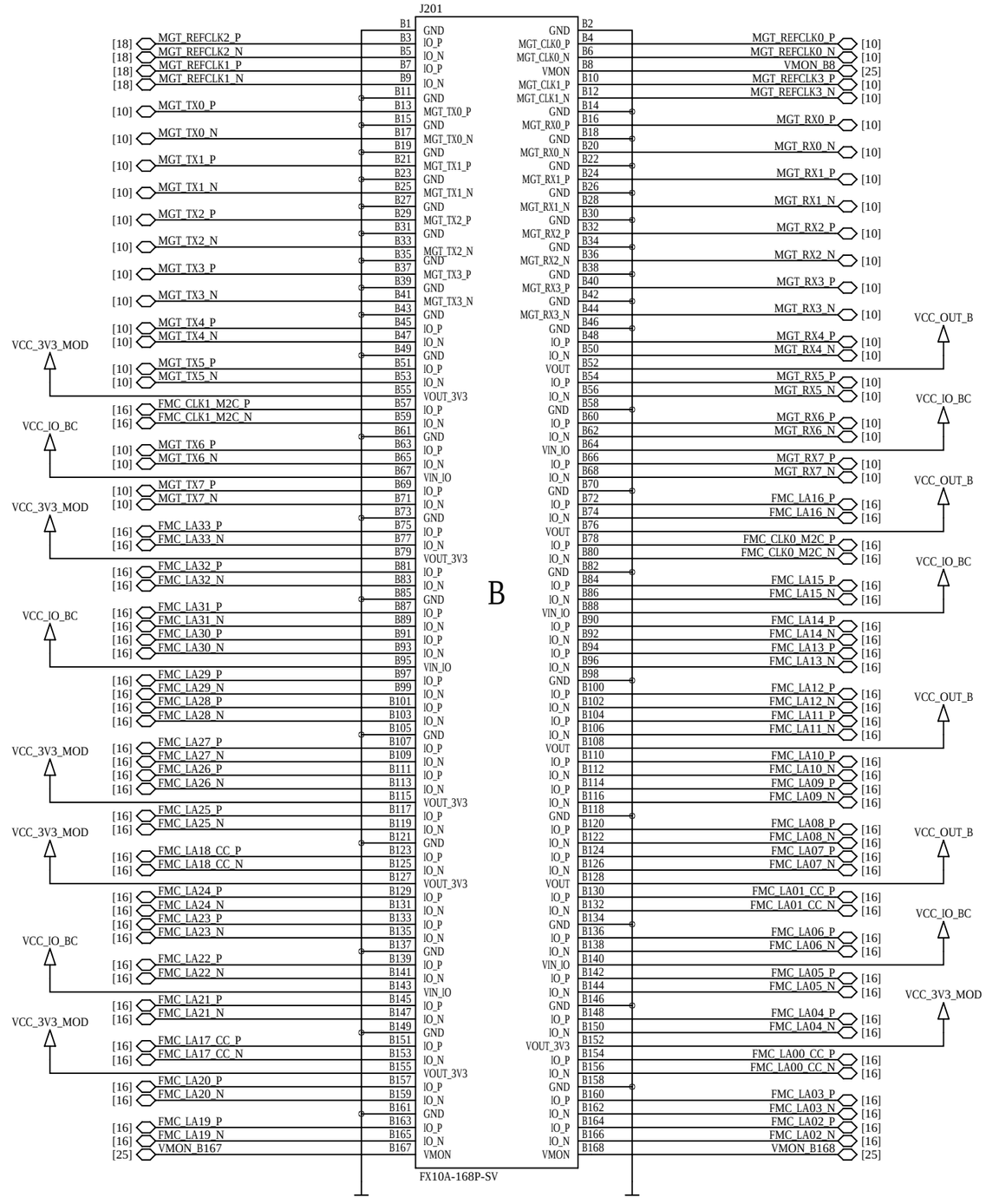

ENCLUSTRA	Project	Mercury+ PE3	Sheet Name	2_MERCURY_CONNECTORS_A/B	Customer No	0000	Revision	R1.1	DNE = do not equip	Confidential
	Company	Enclustra GmbH	Copyright	© 2022 by Enclustra GmbH Switzerland	Project No	420	Designed	MHEI	Date 25 Oct 2022	Sheet/sheets 2 / 29

Mercury Module Connector C

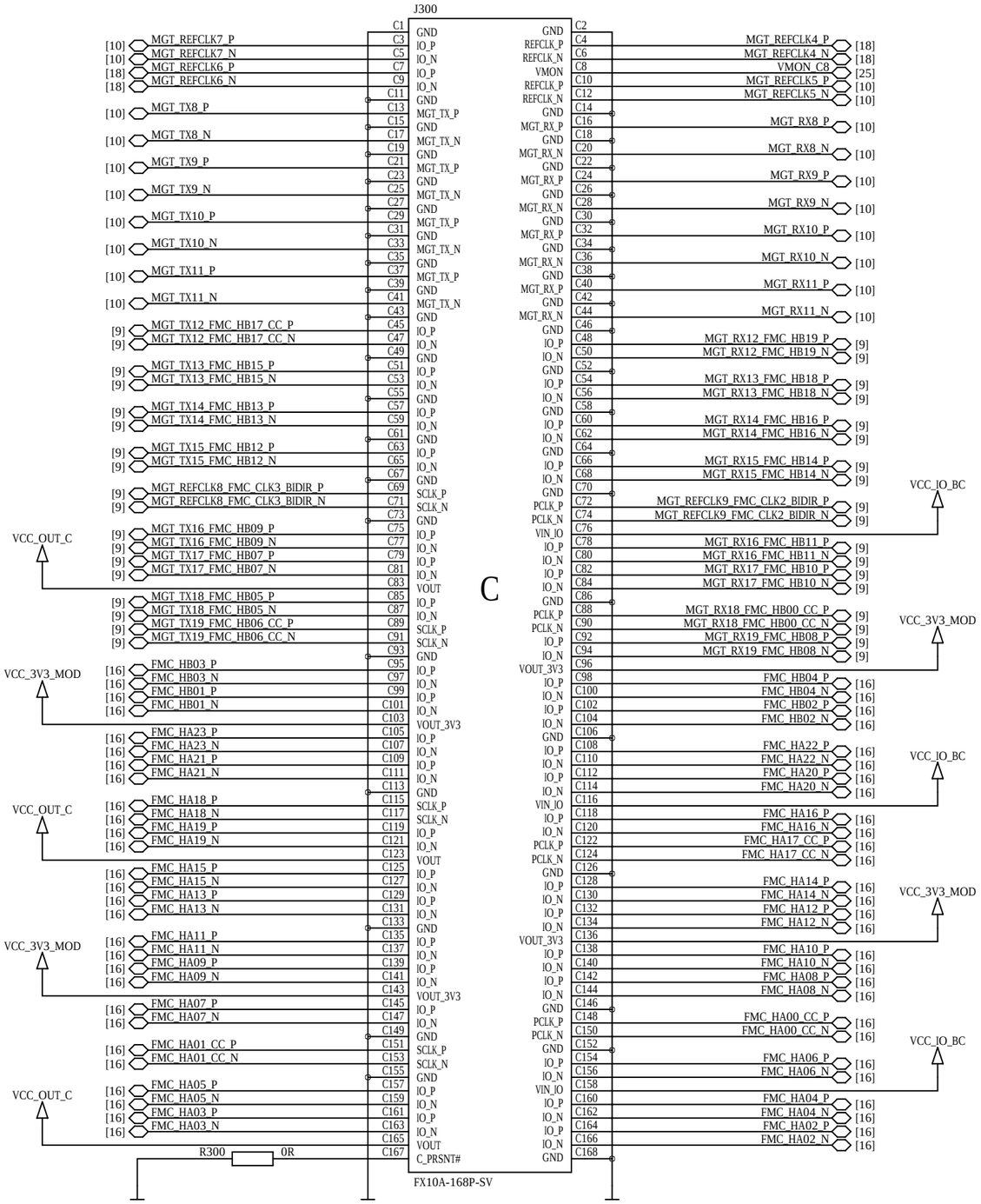

Module Decoupling A

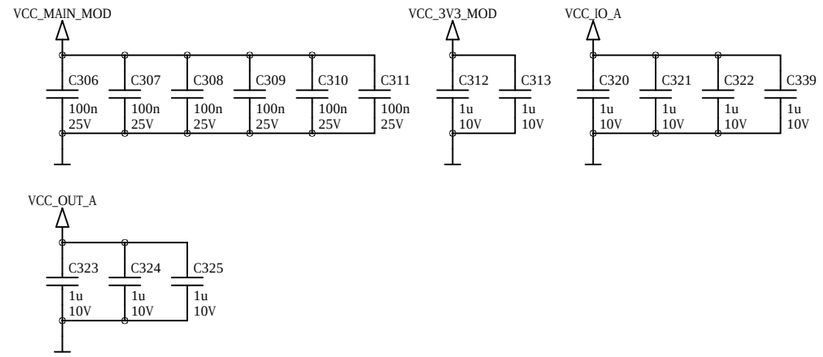

Module Decoupling B

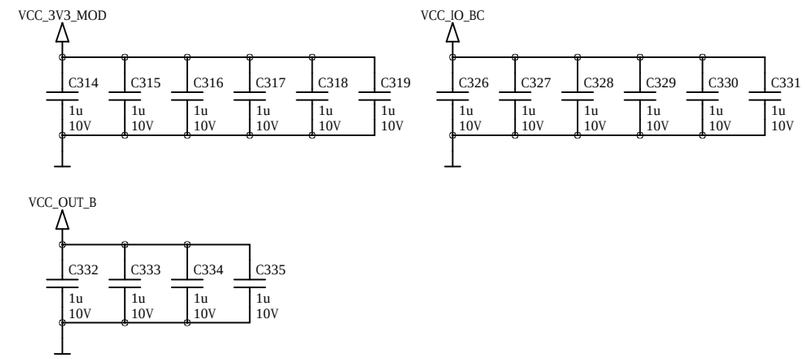

Module Decoupling C

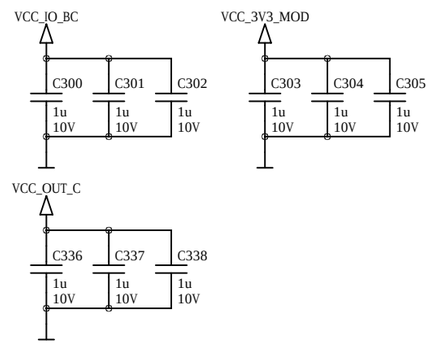

ENCLUSTRA	Project	Mercury+ PE3	Sheet Name	3_MERCURY_CONNECTOR_C	Customer No	0000	Revision	R1.1	DNE = do not equip	Confidential
	Company	Enclustra GmbH	Copyright	© 2022 by Enclustra GmbH Switzerland	Project No	420	Designed	MHEI	Date 25 Oct 2022	Sheet/sheets 3 / 29

System Controller PLD

The pinout is not included in the user schematics.

Programming the system controller PLD with a user bitstream voids the board warranty.

I2C Address: 0 0 0 1 1 0 1 Rw

SC Bank 0

U400-A

PT9A	A2	FTDI_ACBUS2_USC_STP	[5]
PT9B	B3	FTDI_ACBUS3_USC_NXT	[5]
PT10A	A3	FTDI_ACBUS4_USC_DIR	[5]
PT10B	C4	FTDI_ACBUS6	[5]
PT10C_TDO	A4	FTDI_BDBUS2_SCTDO	[5,20]
PT10D_TDI	B4	FTDI_BDBUS1_SCTDI_RXD	[5,20]
PT11A	B5	FTDI_BCBUS0_LED_HWID3#	[4,5]
PT11B	C6	FTDI_BCBUS1_DONE_HWID0#	[4,5]
PT11C_TCK	B6	FTDI_BDBUS0_SCTCK_TXD	[5,20]
PT11D_TMS	A6	FTDI_BDBUS3_SCTMS	[5,20]
PT12A_PCLKT0_1	A7	FTDI_ACBUS5_USC_CLK	[5]
PT12B_PCLKC0_1	B7	FTDI_BCBUS2_SRSTRDY#_HWID1#	[4,5]
PT12C_PCLKT0_0	C8	FTDI_BCBUS3_PORLOAD#_HWID2#	[4,5]
PT12D_PCLKC0_0	B8	FTDI_BCBUS4_BOOTMODE	[5]
PT15A	C9	FTDI_BCBUS5_MODE0	[5]
PT15B	A9	FTDI_BCBUS6_MODE1	[5]
PT15C_JTAGEN	B9	FTDI_BDBUS7_SCJTAGEN	[5,20]
PT15D_PROGRAM#	C10	EE_CLK	[5]
PT16A	A10	FTDI_PWREN#	[5]
PT16B	C11	USB_MODE0	[4,7,21]
PT16C	A11	USBMOD_CPEN	[2]
PT16D	B12	CLK_SEL_PE1_R1#	[4]
PT17A	C12	FF_MODSEL#	[14]
PT17B	A12	M2_PEDET	[14]
PT17C_INIT#	B13	EE_CS	[5]
PT17D_DONE	A13	EE_DATA	[5]

LCMXO2-4000HC-6MG132I

SC Bank 1

U400-B

PR2A	B14		POR#_LOAD#	[2,20]
PR2B	C13		FPGA_DONE	[2,20,21]
PR2C	C14		BOOT_MODE0	[2,21]
PR2D	D12		SRST#_RDY#	[2,20]
PR3A	E12	R402 22R	JTAG_TCK	[2,20]
PR3B	E14		JTAG_TDO	[20]
PR4A	E13		JTAG_TMS	[2,20]
PR4B	F12		JTAG_TDI	[2,20]
PR4C	F13		UART_RX	[2,20]
PR4D	F14		UART_TX	[2,20]
PR5A	G12		FLASH_DO	[2]
PR5B	G14		FLASH_CS#	[2]
PR5C_PCLKT1_0	G13	R403 22R	FLASH_CLK	[2]
PR5D_PCLKC1_0	H12		FLASH_DI	[2]
PR8A	J12		SIO0_PERST#	[2]
PR8B	J14		SIO1	[2]
PR8C	J13		SIO2_SDCD#	[2]
PR8D	K12		SIO3	[2]
PR9A	K13		DIP#	[2,8,21]
PR9B	K14		BTN#	[2,8,21]
PR9C	L14			
PR9D	M13			
PR10A	M12		LED2#	[2,21]
PR10B	M14		LED3#	[2,21]
PR10C	N13		LED0#	[2,21]
PR10D	N14		LED1#	[2,21]

LCMXO2-4000HC-6MG132I

SC Bank 2

U400-C

PB4A	P2	SCMODE0#_VMON_SEL	[4,21,25]
PB4B	N2	PWR_USBA_SRC_EN	[6,7]
PB4C	P3	PWR_BTN#_SC	[4]
PB4D	M3	PWR_CTRL	
PB6A	N3	PWR_EN	[2,20,21,25]
PB6B	P4	PWR_OK#	[19,21]
PB6C	M4	PWR_USBC_SRC_EN	[4,7,8]
PB6D	N4	PWR_GOOD_USBCM	[20]
PB9A_PCLKT2_0	N6	USBCC_GPIO15	[4,8,21]
PB9B_PCLKC2_0	P6	PWR_GOOD_AUX	[8,20,25]
PB9C	N5	FF_CPERST#	[14]
PB9D	M5	SCMODE1#_PCIE_SEL	[21]
PB11A_PCLKT2_1	M7	BOOT_MODE1	[2,4,21]
PB11B_PCLKC2_1	N8	VBUS_DETECT	[2,7]
PB11C	P7	PWR_EN_3V3_MOD	[8]
PB11D	N7	RXLED#	[21]
PB15A	P8	TXLED#	[21]
PB15B	M8	SCLED#	[21]
PB15C	P9	SC_LED4#	[21,22]
PB15D	N9	JTAG_PRSNT#	[20]
PB18A	M9	I2C_MGMT_SCL_LS	[19,20]
PB18B	N10	I2C_MGMT_SDA_LS	[19,20]
PB18C	M10	I2C_MGMT_INT#_LS	[8,17,19,25]
PB18D	P11	RST_AUX#	[19,20]
PB20A	M11	SC_LED5#	[21,22]
PB20B	P12	SDCARD_CD#	[14]
PB20C	N12	USB_SEL	[4,7,21]
PB20D	P13	USBC_UFP	[7,8]

LCMXO2-4000HC-6MG132I

SC Bank 3

U400-D

PL2A_GPLLT_FB	B1		FTDI_ACBUS1	[5]
PL2B_GPLLC_FB	B2		FTDI_ACBUS0	[5]
PL2C_GPLLT_IN	C1		FTDI_ADBUS7_USC_D7	[5]
PL2D_GPLLC_IN	C3		FTDI_ADBUS6_USC_D6	[5]
PL3A_PCLKT3_2	C2		FTDI_ADBUS5_USC_D5	[5]
PL3B_PCLKC3_2	D1		FTDI_ADBUS4_USC_D4	[5]
PL3C	E1		FTDI_ADBUS3_USC_D3	[5]
PL3D	E2		FTDI_ADBUS2_USC_D2	[5]
PL4A	E3		FTDI_ADBUS1_USC_D1	[5]
PL4B	F2		FTDI_ADBUS0_USC_D0	[5]
PL4C	F1		FTDI_RESET#	[5,20]
PL4D	F3		USBCC_GPIO14	[4,8,18,21]
PL5A_PCLKT3_1	G3		PWR_USBC_SINK_EN	[7,8,20]
PL5B_PCLKC3_1	H2		CLK_24_SC	[18]
PL5C	H1	R404-C 100R	EIO1_MISO	[12]
PL5D	H3	R404-B 100R	EIO3_CS#	[12]
PL8A	J1		EIO_PWR_EN#	
PL8B	J2		PCIE_PERST#	[12]
PL8C	J3		PCIE_WAKE#	[12]
PL8D	K2	R404-A 100R	EIO2_MOSI	[12]
PL9A_PCLKT3_0	K1	R401 22R	EIO0_CLK	[12]
PL9B_PCLKC3_0	K3		USB_MODE1	[4,7,21]
PL10B	L3		USBCC_SINK_EN#	[8,21]
PL10C	M1		M2_PERST#	[14]
PL10D	M2		FF_MODPRS#	[14]

LCMXO2-4000HC-6MG132I

SC-less Operation

not included in user schematics

This part is intentionally left blank.

SC Power

VCC_3V3_AUX VCC_IO_A

U400-E

		VCCIO0	A8
		VCCIO0	B10
		VCCIO0	C5
		VCCIO1	D14
		VCCIO1	H14
		VCCIO1	L12
		VCCIO2	M6
		VCCIO2	N11
		VCCIO2	P1
		VCCIO3	D3
		VCCIO3	G1
		VCCIO3	L1
A5	GND		
B11	GND		
D2	GND		
D13	GND	NC	C7
G2	GND		
H13	GND		
L2	GND	VCC	A1
L13	GND	VCC	A14
P5	GND	VCC	N1
P10	GND	VCC	P14

LCMXO2-4000HC-6MG132I

SC Decoupling

VCC_3V3_AUX VCC_IO_A

C400 1u 10V C401 1u 10V C402 1u 10V C403 1u 10V

Hardware Revision

HWID = 0 1 1 1

[4,5]	FTDI_BCBUS1_DONE_HWID0#	R409	DNE	1k
[4,5]	FTDI_BCBUS2_SRSTRDY#_HWID1#	R410	DNE	1k
[4,5]	FTDI_BCBUS3_PORLOAD#_HWID2#	R411	DNE	1k
[4,5]	FTDI_BCBUS0_LED_HWID3#	R412		1k

SC Miscellaneous

VCC_3V3_AUX

[4]	PWR_BTN#_SC	R405		47k
[4,7,21]	USB_SEL	R421		10k
[4]	CLK_SEL_PE1_R1#	R406		1k
[2,4,21]	BOOT_MODE1	R407	DNE	4k7
[4,21,25]	SCMODE0#_VMON_SEL	R408		4k7
[4,8,18,21]	USBCC_GPIO14	R422		10k
[4,8,21]	USBCC_GPIO15	R423		10k
[4,7,21]	USB_MODE0	R418		10k
[4,7,21]	USB_MODE1	R419		10k
[4,7,8]	PWR_USBC_SRC_EN	R427		10k

R404-D 100R

ENCLUSTRA	Project	Mercury+ PE3	Sheet Name	4_SYSTEM_CONTROLLER	Customer No	0000	Revision	R1.1	DNE = do not equip	Confidential
	Company	Enclustra GmbH	Copyright	© 2022 by Enclustra GmbH Switzerland	Project No	420	Designed	MHEI	Date 25 Oct 2022	Sheet/sheets 4 / 29

SC FTDI USB 2.0 Device Controller

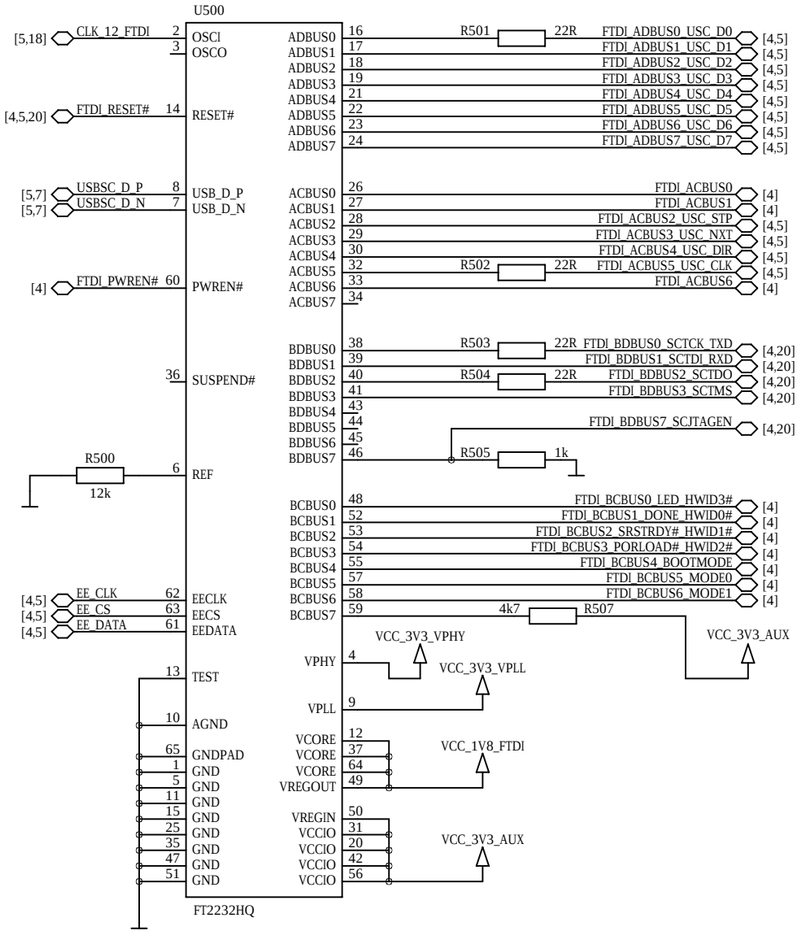

SC USB 2.0 Device PHY

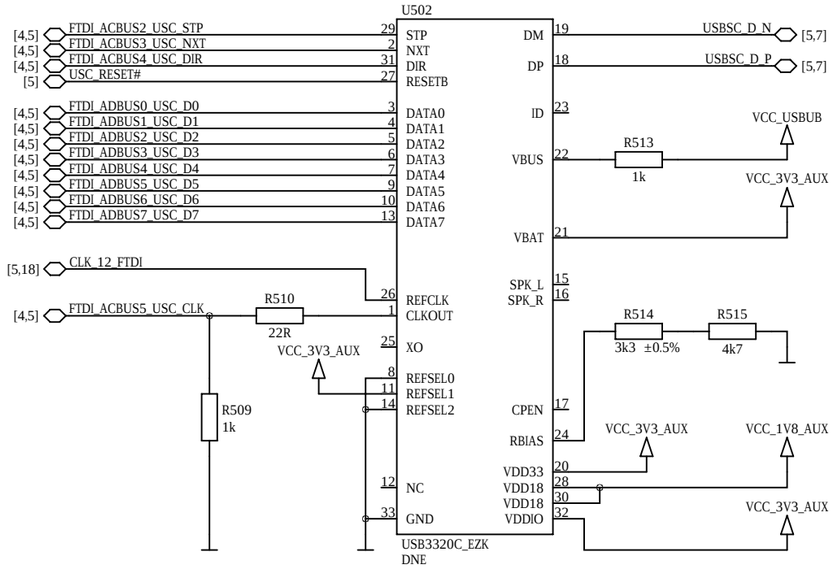

SC FTDI EEPROM

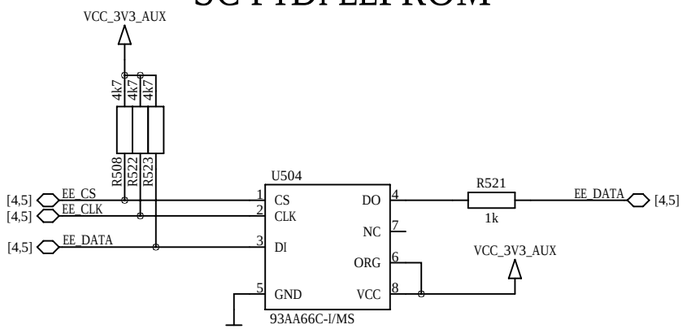

SC USB 2.0 Device PHY Reset

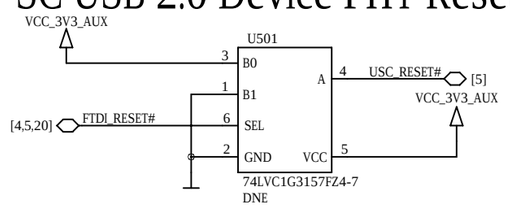

SC Decoupling & Power Filters

not included in user schematics

This part is intentionally left blank.

Buck Converter 3.3V 3A

Vin=4-20V FS=500kHz Vfb=0.8V
not included in user schematics

This part is intentionally left blank.

ENCLUSTRA	Project	Mercury+ PE3	Sheet Name	5_USB_2.0_CONTROLLER	Customer No	0000	Revision	R1.1	DNE = do not equip	Confidential
	Company	Enclustra GmbH	Copyright	© 2022 by Enclustra GmbH Switzerland	Project No	420	Designed	MHEI	Date 25 Oct 2022	Sheet/sheets 5 / 29

USB 3.0 Host Connector

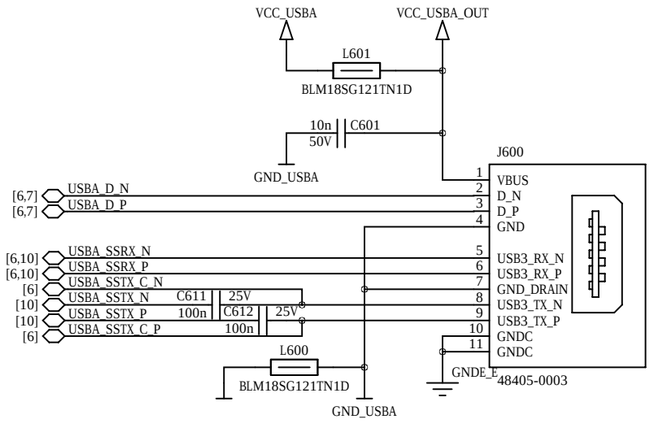

USB Micro B Connector

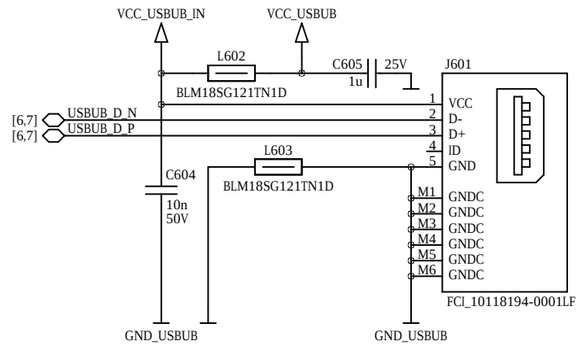

USB Type-C Connector

SS + HS Data: UFP or DFP, Power: Source 5V and Sink 5-12V

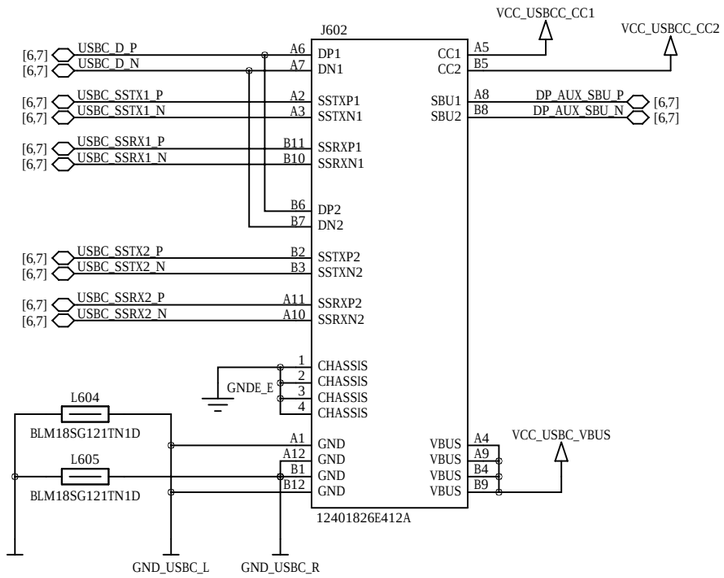

USB-A Load Switch

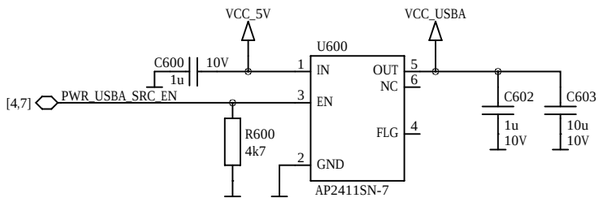

USB 2.0 ESD Protection

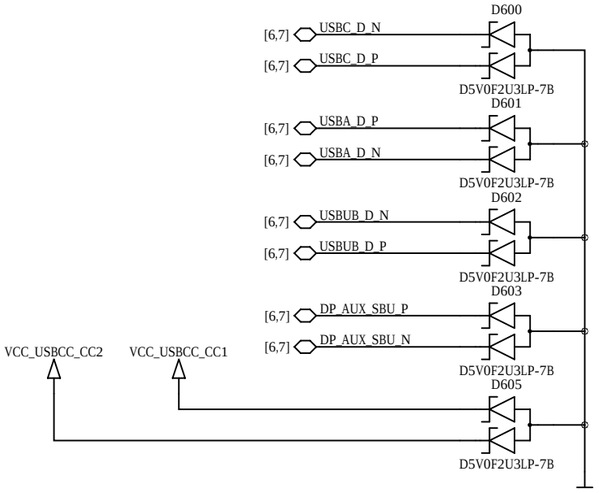

USB SS ESD Protection

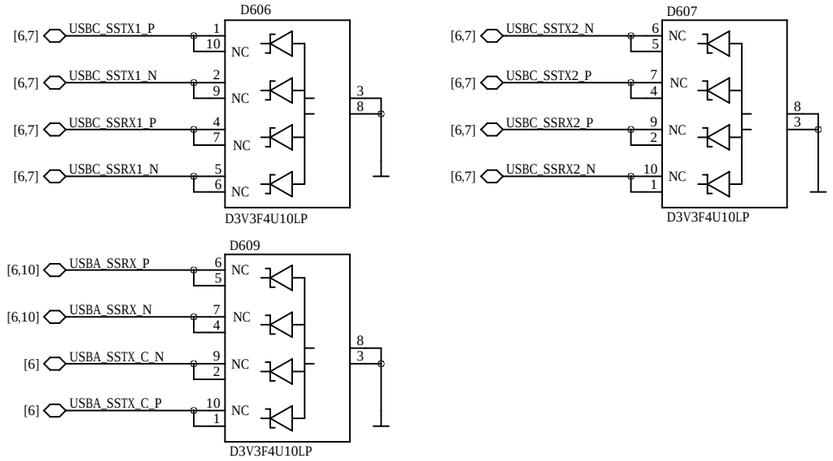

USB Type-C VBUS Filter

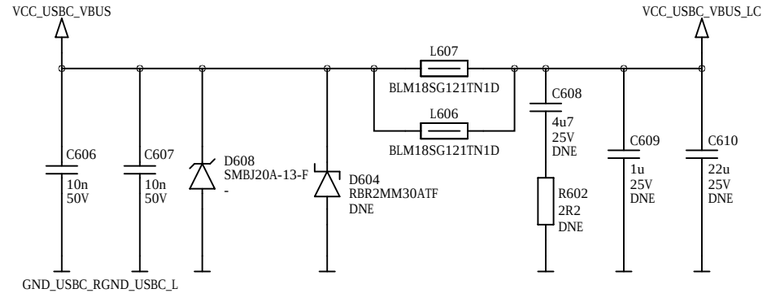

ENCLUSTRA	Project	Mercury+ PE3	Sheet Name	6_USB_CONNECTORS	Customer No	0000	Revision	R1.1	DNE = do not equip	Confidential
	Company	Enclustra GmbH	Copyright	© 2022 by Enclustra GmbH Switzerland	Project No	420	Designed	MHEI	Date 25 Oct 2022	Sheet/sheets 6 / 29

USB Multiplexers

Not all USB Multiplexer States are allowed. For details see User Manual.

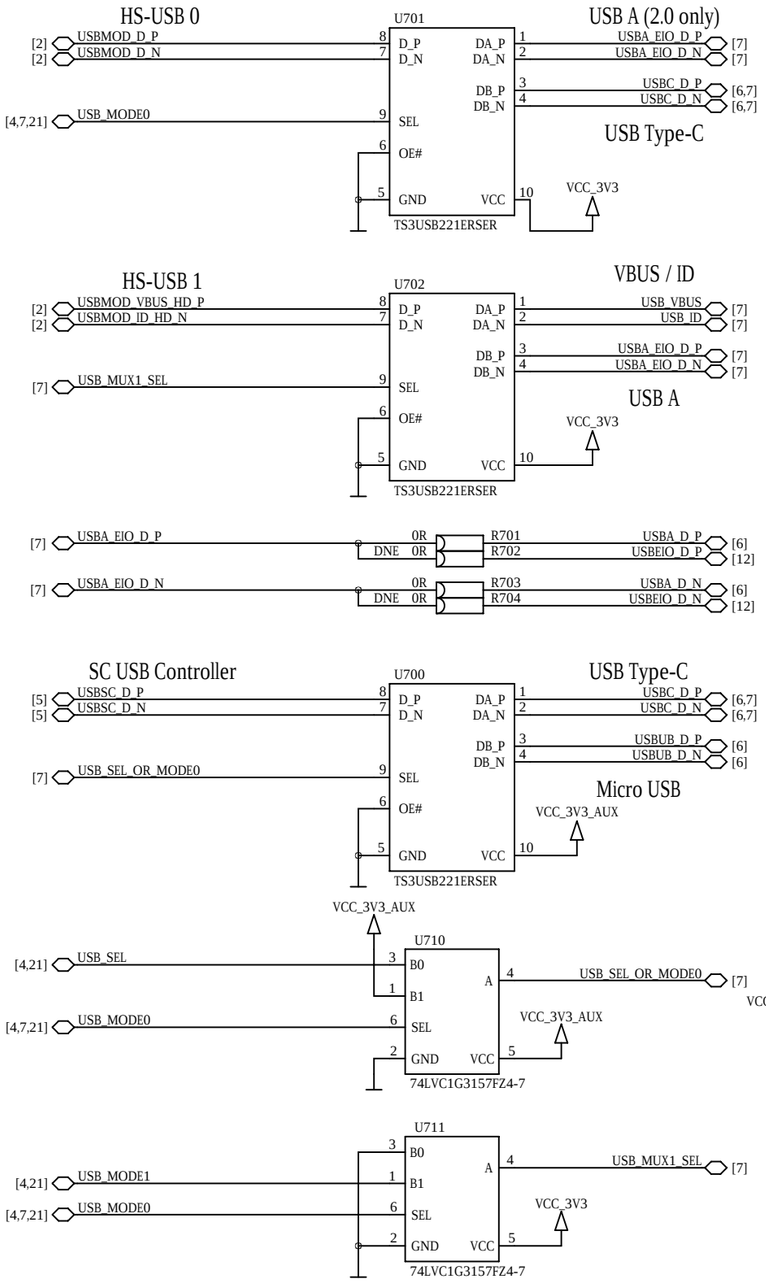

USB SS Redriver

EQ = 6dB, DE = -3.5dB, OS = 1.1Vpp

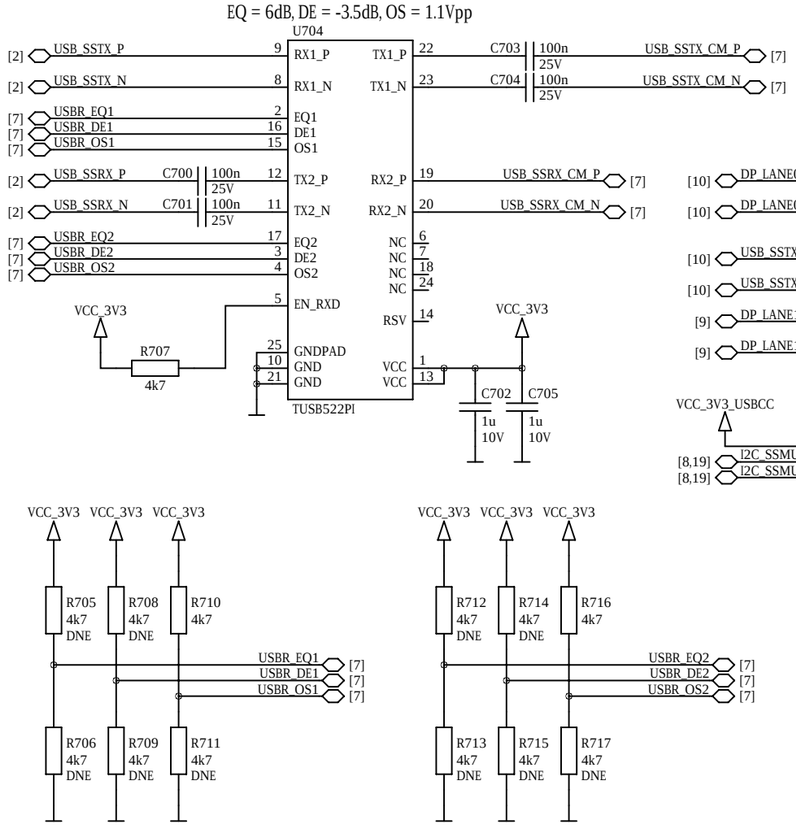

USB Type-C Multiplexer

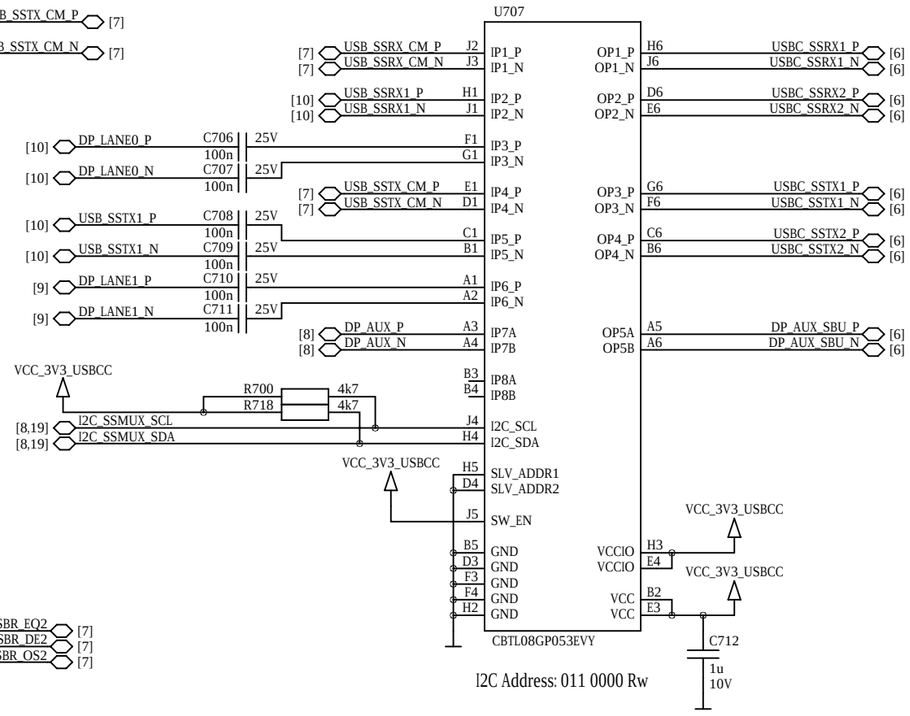

USB Type-C VBUS/ID

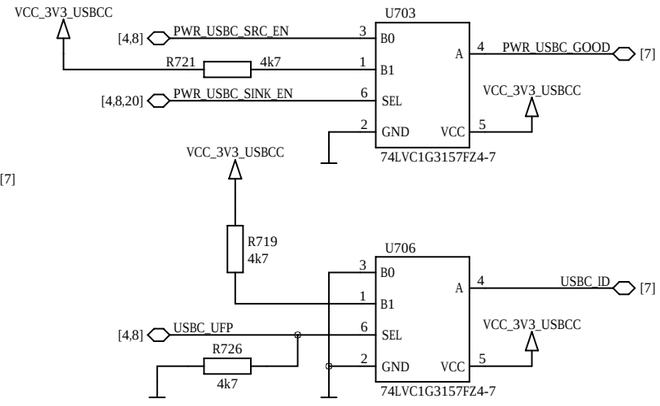

VBUS/ID Multiplexer

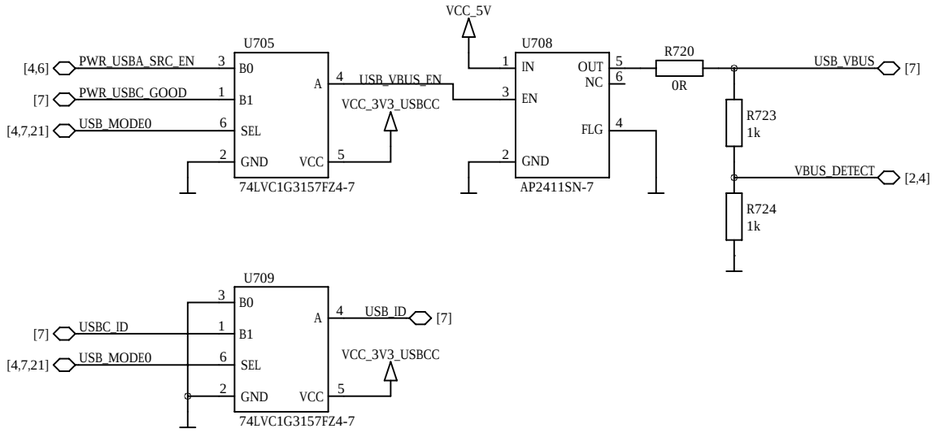

enclustra	Project: Mercury+ PE3	Sheet Name: 7_USB_MULTIPLEXERS_REDRIVERS	Customer No: 0000	Revision: R1.1	DNE = do not equip	Confidential	
	Company: Enclustra GmbH	Copyright: © 2022 by Enclustra GmbH Switzerland	Project No: 420	Designed: MHEI	Date: 25 Oct 2022	Sheet/sheets: 7 / 29	

USB Type-C Controller

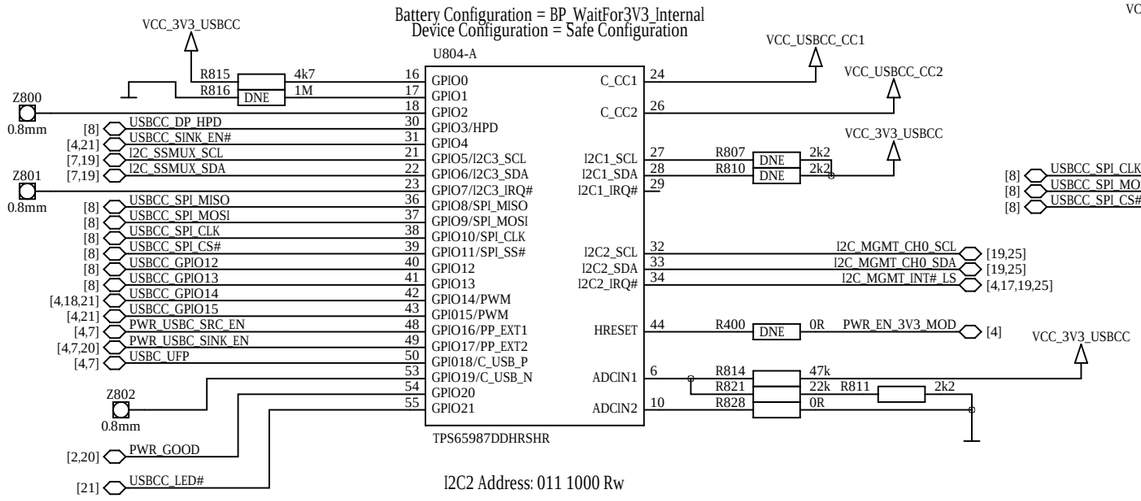

USB Type-C Controller Flash

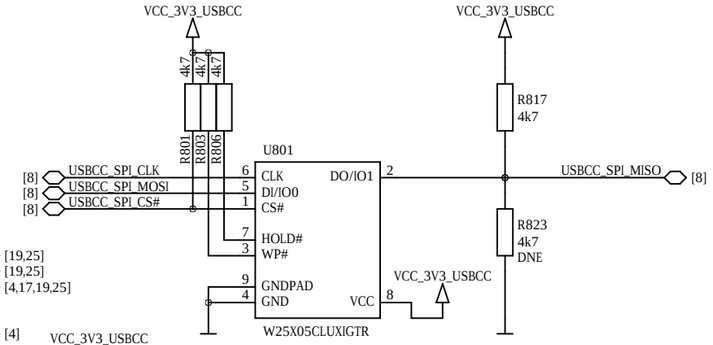

USB Type-C Controller Miscellaneous

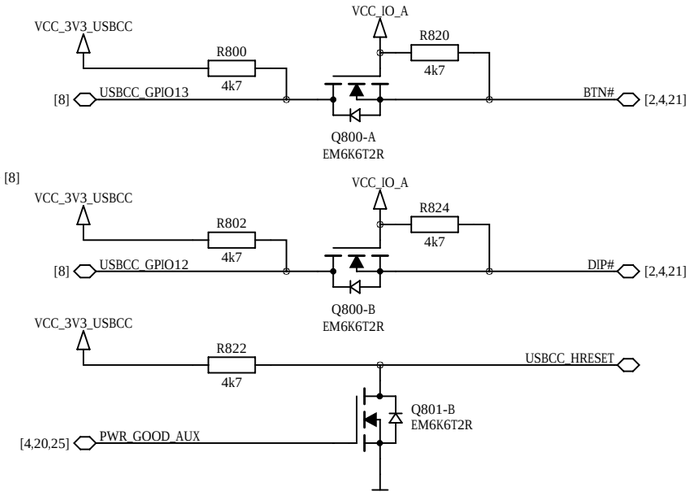

USB Type-C Controller Power

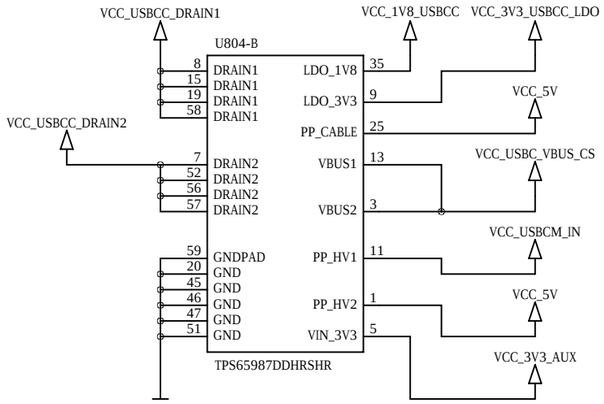

DisplayPort Aux Level Shifter

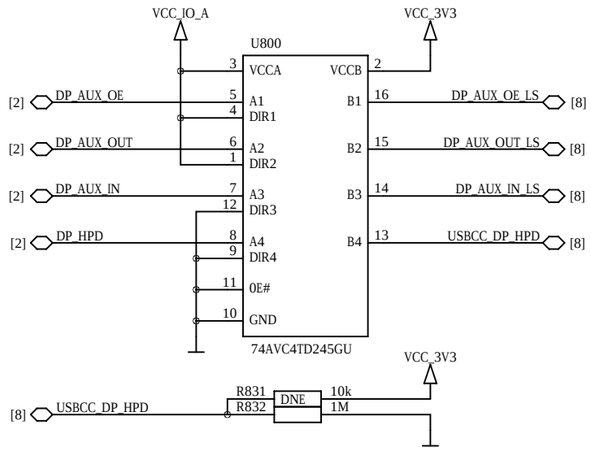

DisplayPort LVDS Transceiver

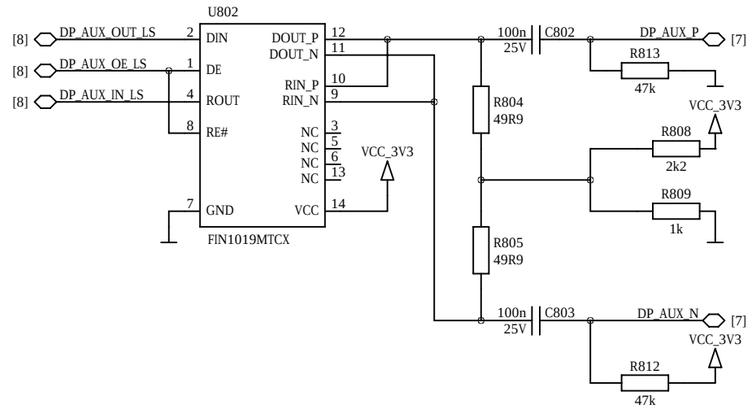

USB Type-C Controller Decoupling

not included in user schematics

This part is intentionally left blank.

ENCLUSTRA	Project	Mercury+ PE3	Sheet Name	8_USB_TYPE-C_CONTROLLER	Customer No	0000	Revision	R1.1	DNE = do not equip	Confidential
	Company	Enclustra GmbH	Copyright	© 2022 by Enclustra GmbH Switzerland	Project No	420	Designed	MHEI	Date 25 Oct 2022	Sheet/sheets 8 / 29

MGT FMC Routing

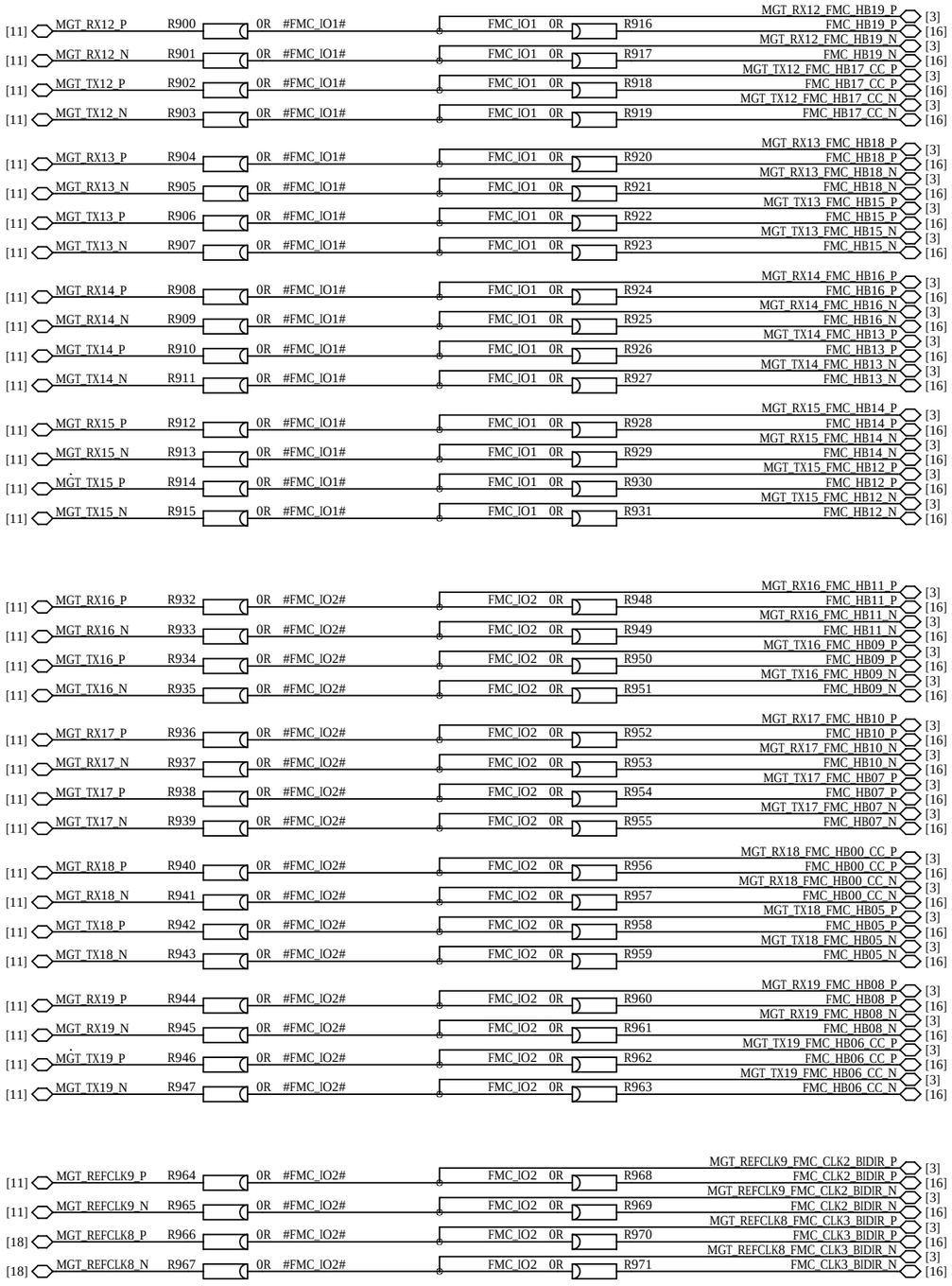

M2 vs. Displayport Routing

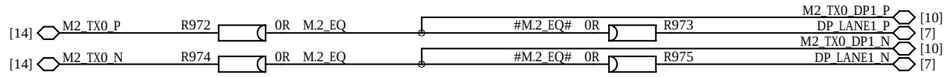

Board Decoupling

not included in user schematics

This part is intentionally left blank.

ENCLUSTRA	Project	Mercury+ PE3	Sheet Name	9_MGT_ROUTING_UFL	Customer No	0000	Revision	R1.1	DNE = do not equip	Confidential	
	Company	Enclustra GmbH	Copyright	© 2022 by Enclustra GmbH Switzerland	Project No	420	Designed	MHEI	Date 25 Oct 2022	Sheet/sheets	9 / 29

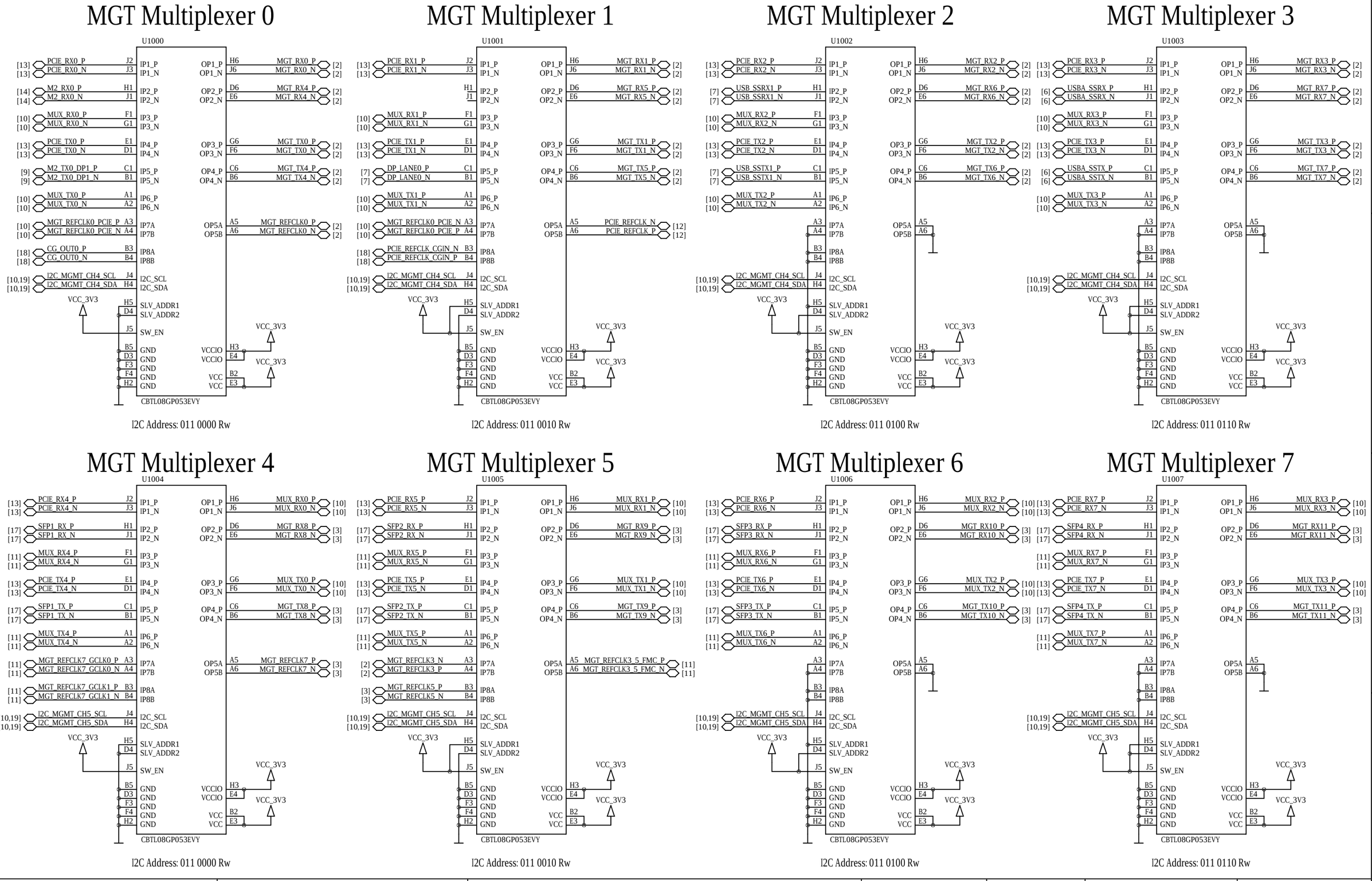

ENCLUSTRA	Project Mercury+ PE3	Sheet Name 10_MGT_MULTIPLEXERS_0-7	Customer No 0000	Revision R1.1	DNE = do not equip	Confidential	
	Company Enclustra GmbH	Copyright © 2022 by Enclustra GmbH Switzerland	Project No 420	Designed MHEI	Date 25 Oct 2022	Sheet/sheets 10 / 29	

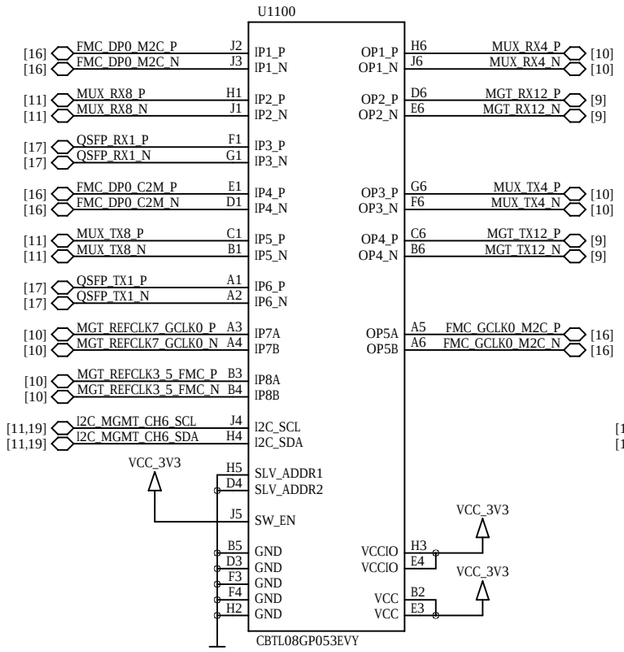

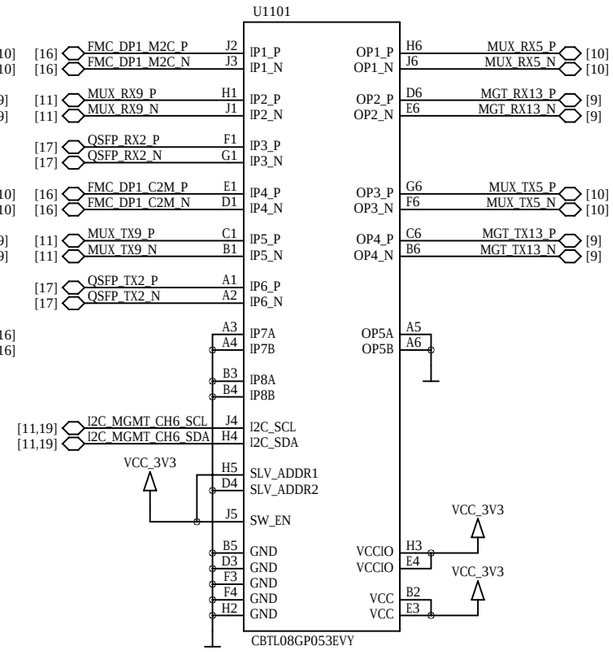

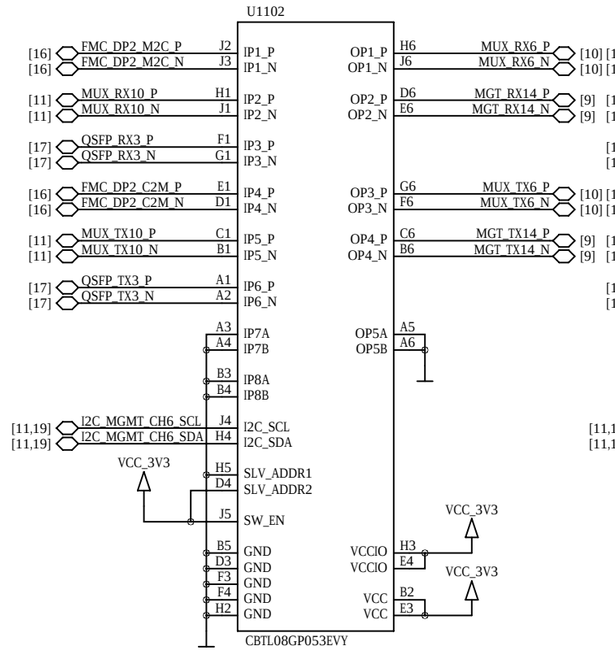

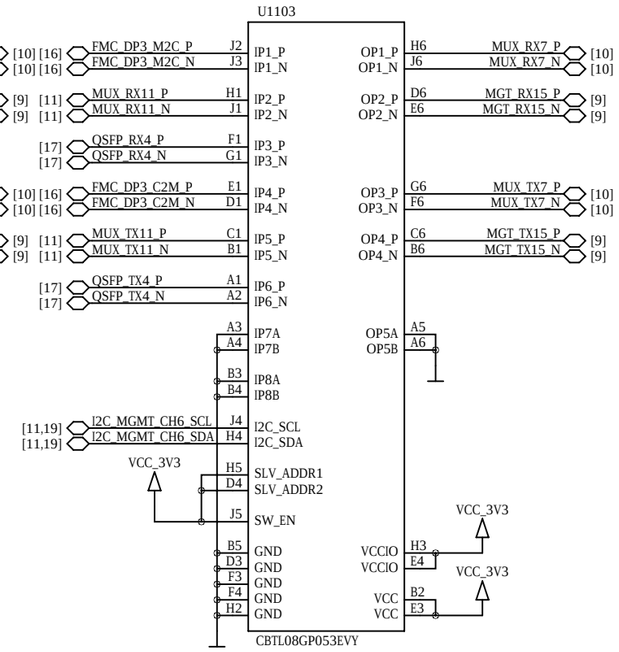

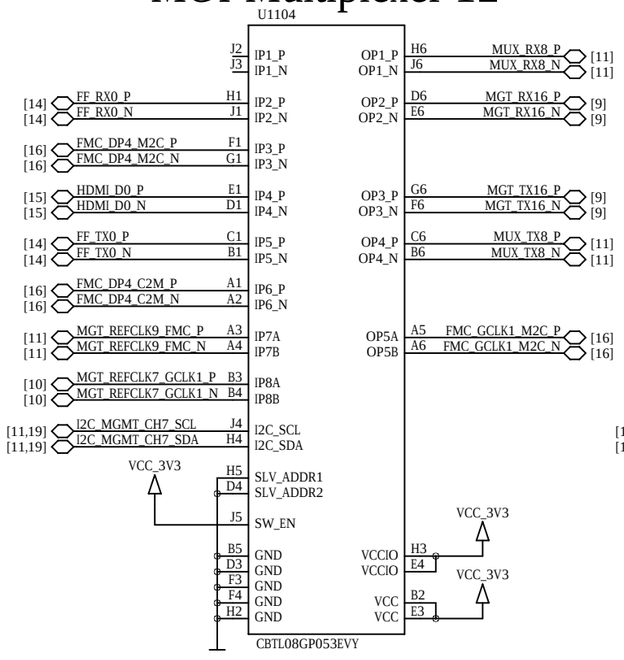

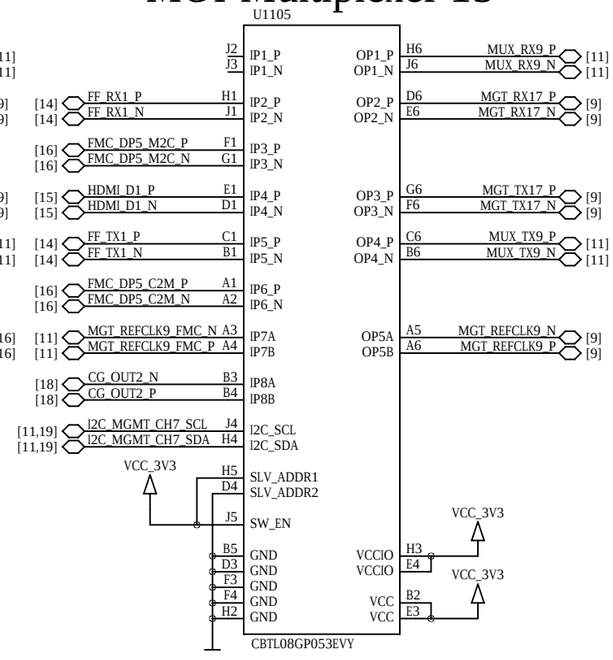

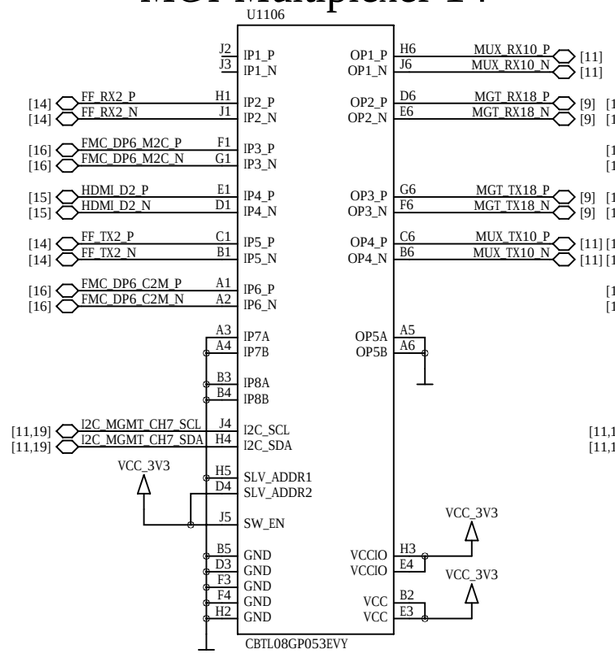

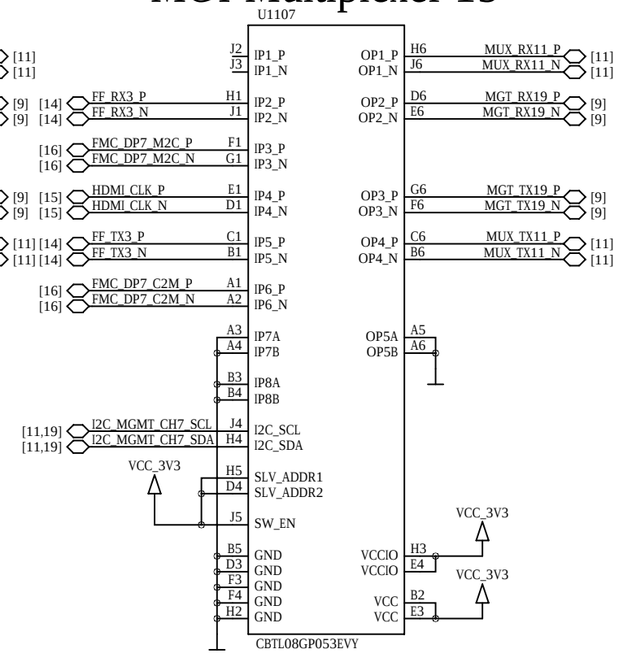

ENCLUSTRA	Project: Mercury+ PE3	Sheet Name: 11_MGT_MULTIPLEXERS_8-15	Customer No: 0000	Revision: R1.1	DNE = do not equip	Confidential	
	Company: Enclustra GmbH	Copyright: © 2022 by Enclustra GmbH Switzerland	Project No: 420	Designed: MHEI	Date: 25 Oct 2022	Sheet/sheets: 11 / 29	

PCIe x8 Edge Connector

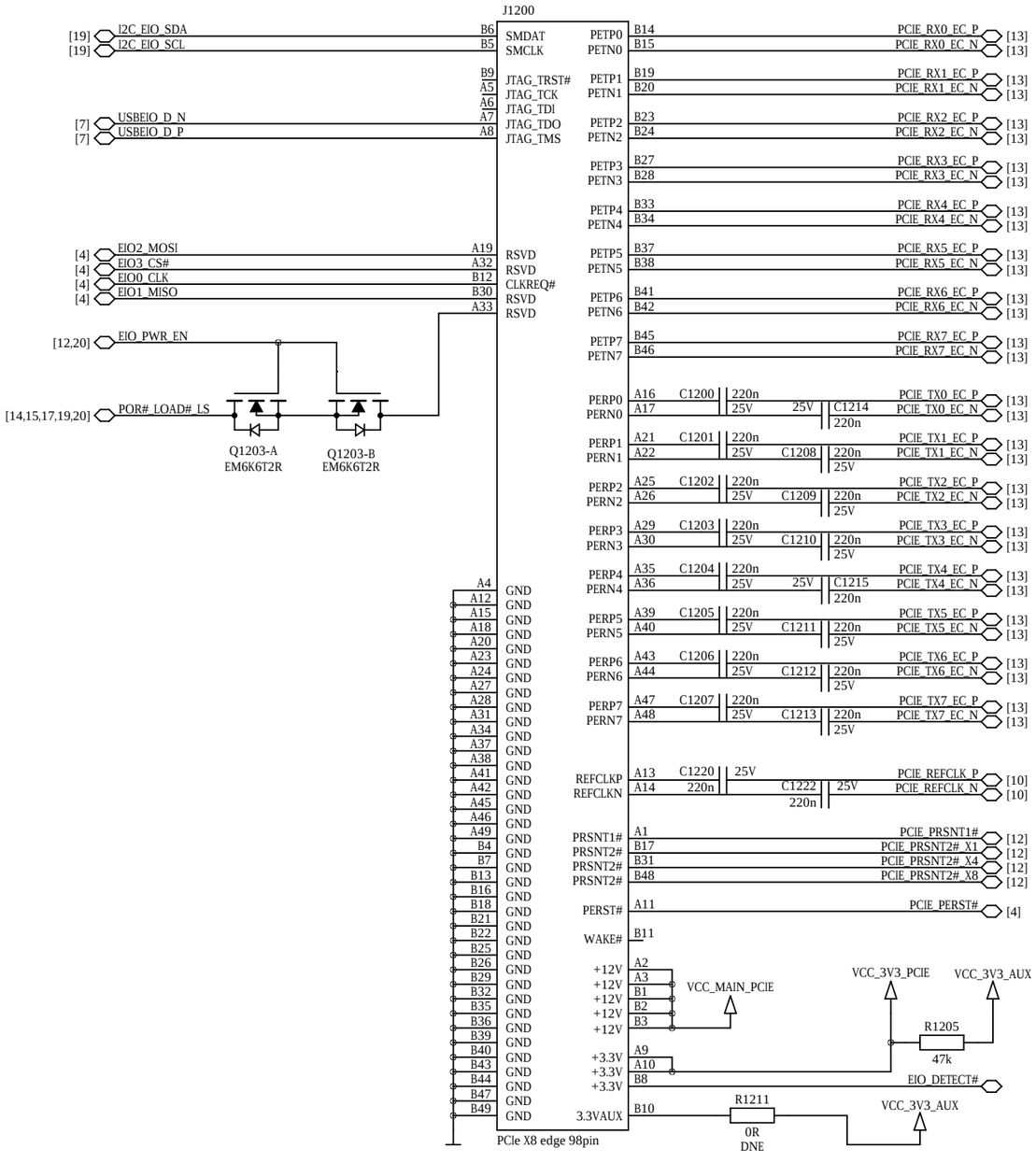

PCIe Power Input & Edge IO Power

not included in user schematics

This part is intentionally left blank.

EIO Miscellaneous

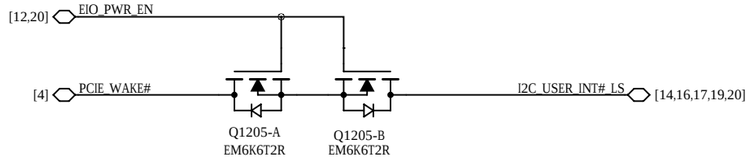

PCIe Present

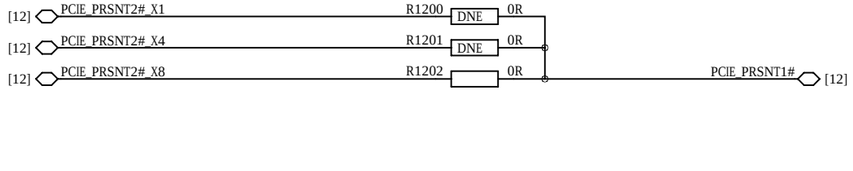

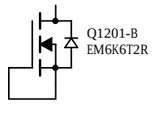

ENCLUSTRA	Project	Mercury+ PE3	Sheet Name	12_PCI_EXPRESS	Customer No	0000	Revision	R1.1	DNE = do not equip	Confidential
	Company	Enclustra GmbH	Copyright	© 2022 by Enclustra GmbH Switzerland	Project No	420	Designed	MHEI	Date 25 Oct 2022	Sheet/sheets 12 / 29

PCIe Redrivers

used in pin mode
sd threshold: 180 mVp-p

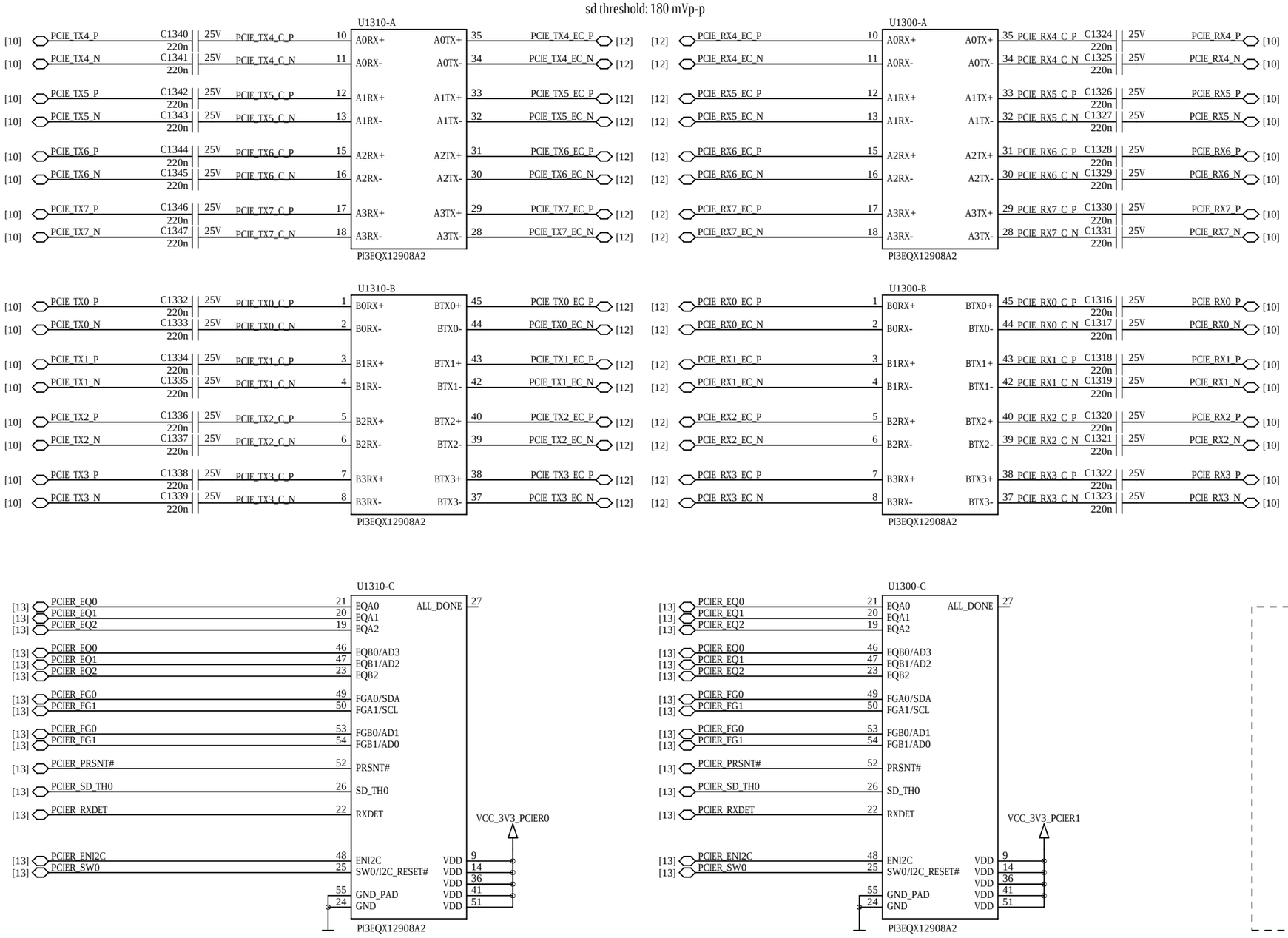

PCIe Redrivers Mode

eq setting: 3.8dB@1.25GHz 8.3dB@4GHz
flat gain setting: 0 dB
output swing: 900mV
receiver detection is enabled to support PCIe Mode

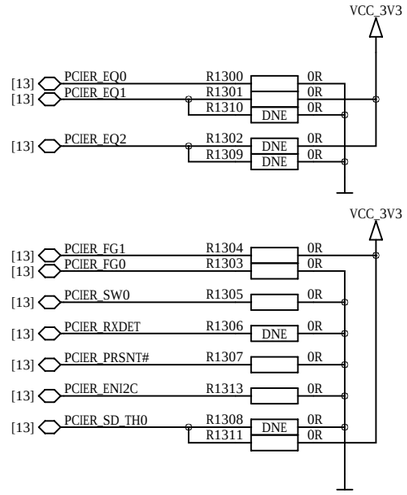

Power Decoupling

not included in user schematics

This part is intentionally left blank.

Project	Mercury+ PE3	Sheet Name	13_PCIE_REDRIVERS	Customer No	0000	Revision	R1.1	DNE = do not equip	Confidential
Company	Enclustra GmbH	Copyright	© 2022 by Enclustra GmbH Switzerland	Project No	420	Designed	MHEI	Date 25 Oct 2022	Sheet/sheets 13 / 29

M.2 (NGFF) Socket, Key M

Use with M- or B&M-keyed M.2 modules
Warning: The M.2 connector with a height of 4.2mm violates the PCIe mechanics specification (max 2.67mm).

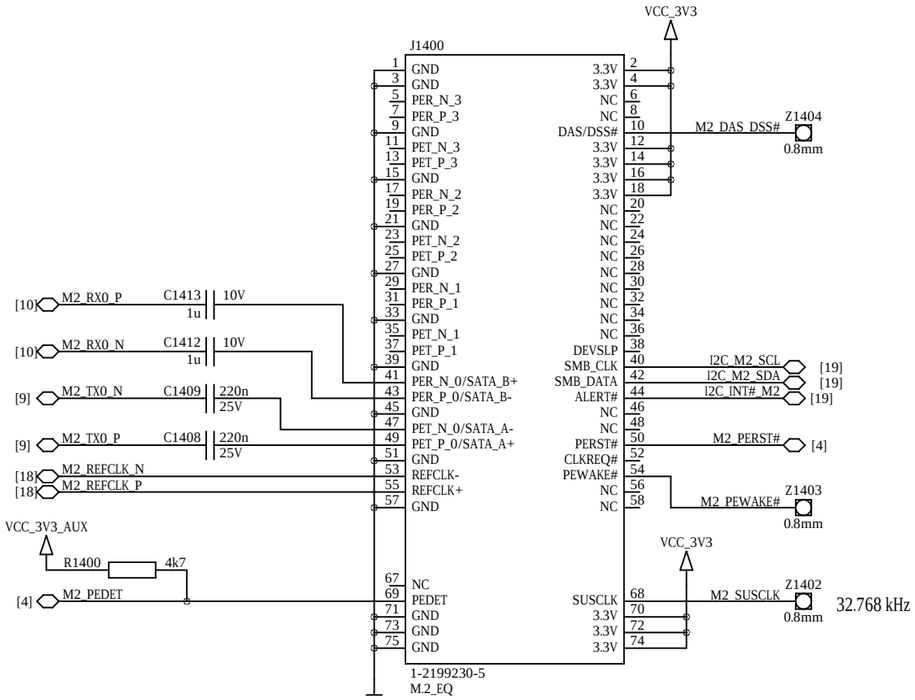

M.2-Module pulls PEDET to GND for SATA / open for PCIe
SMB_CLK and SMB_DATA are 1.8V pins
SMBus interface for SSD Socket 2 and Socket 3
M2_RX0 polarity was chosen to fulfill SATA standard. PCIe supports Lane polarity reversal.
C1412, C1413 are needed to fulfill SATA standard . To keep the total capacity in PCIe standard 1u is used.

Firefly Module Connector

EXUO pinout description
VCC_1V8_FF is not connected (as default)

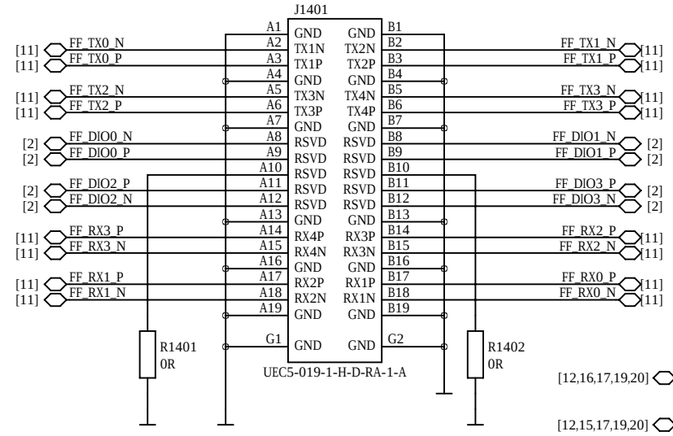

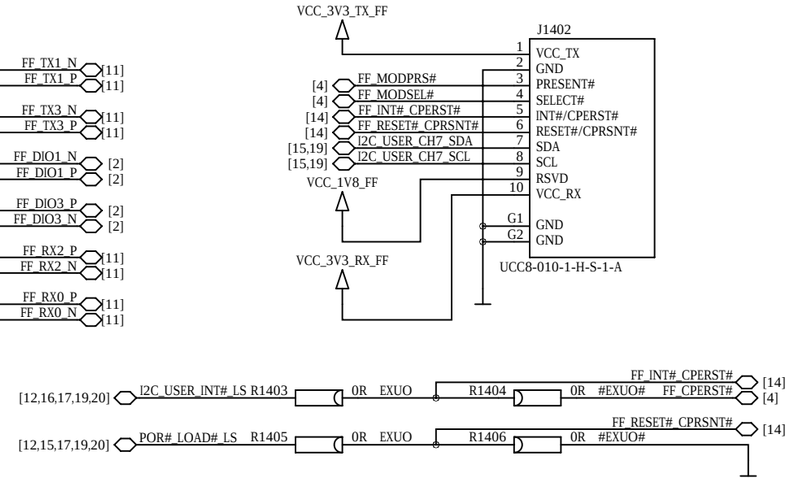

Micro SD-Card Slot & Level Shifter

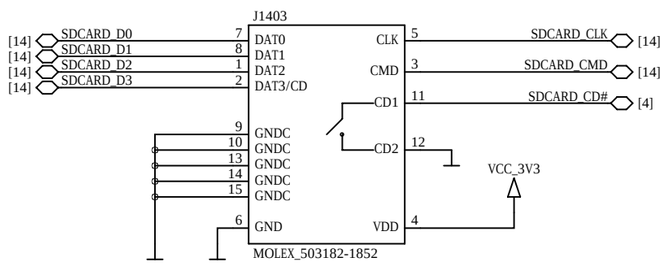

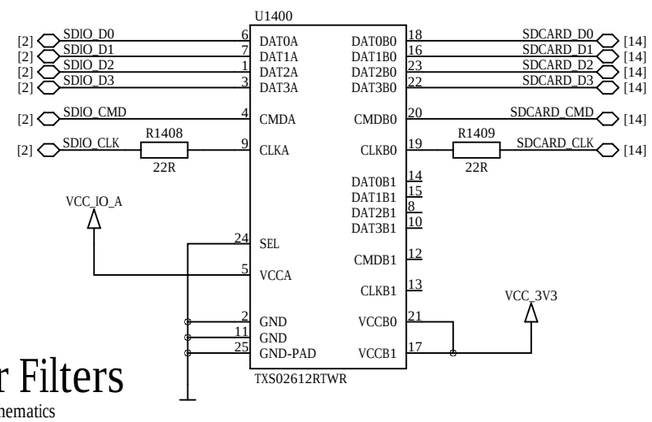

M.2 Decoupling

not included in user schematics

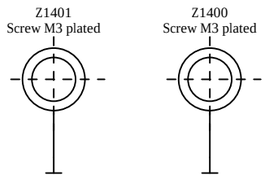

This part is intentionally left blank.

Firefly Power Filters

not included in user schematics

This part is intentionally left blank.

ENCLUSTRA	Project: Mercury+ PE3	Sheet Name: 14_FIREFLY_M2	Customer No: 0000	Revision: R1.1	DNE = do not equip	Confidential	
	Company: Enclustra GmbH	Copyright: © 2022 by Enclustra GmbH Switzerland	Project No: 420	Designed: MHEI	Date: 25 Oct 2022	Sheet/sheets: 14 / 29	

Gigabit Ethernet Port 0

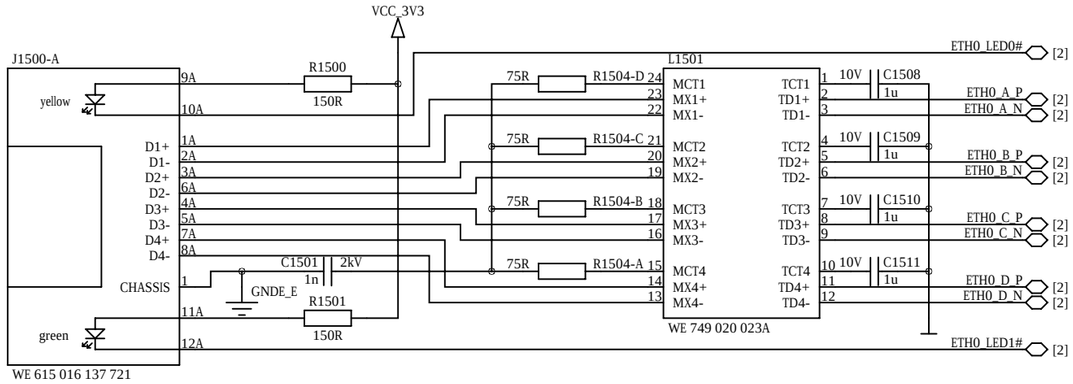

Gigabit Ethernet Port 1

Fast Ethernet ports of ZX1, SA2 modules are not supported

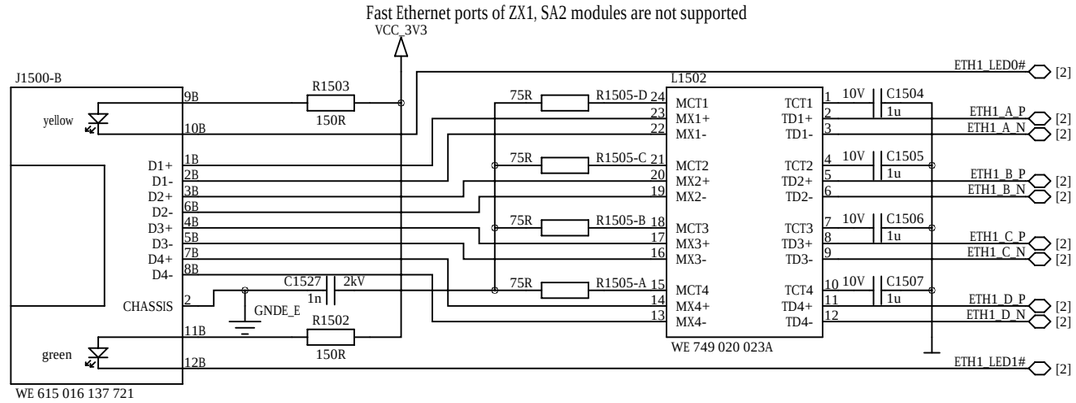

HDMI Retimer

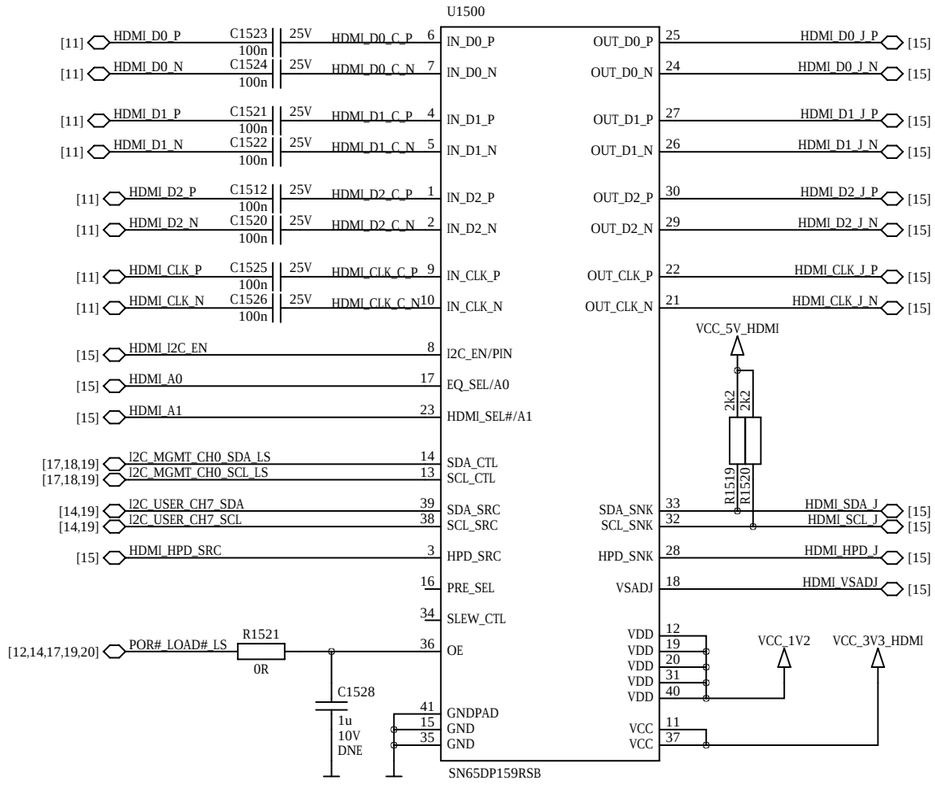

I2C Address: 101 1110 Rw

HDMI Level Shifters

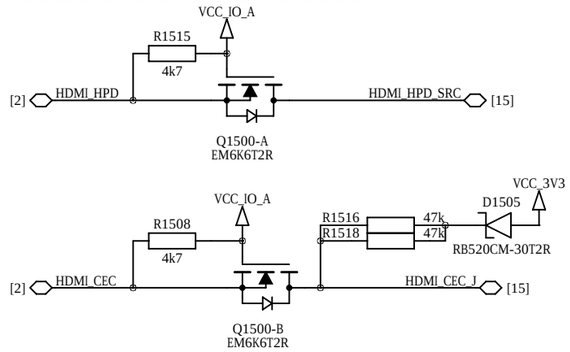

HDMI Retimer Mode

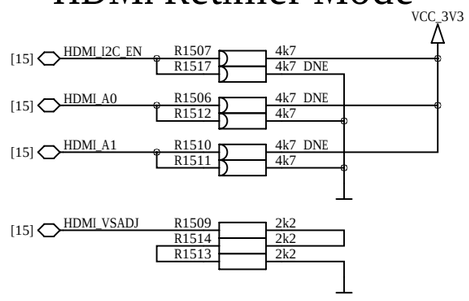

HDMI Decoupling

not included in user schematics

This part is intentionally left blank.

HDMI Connector

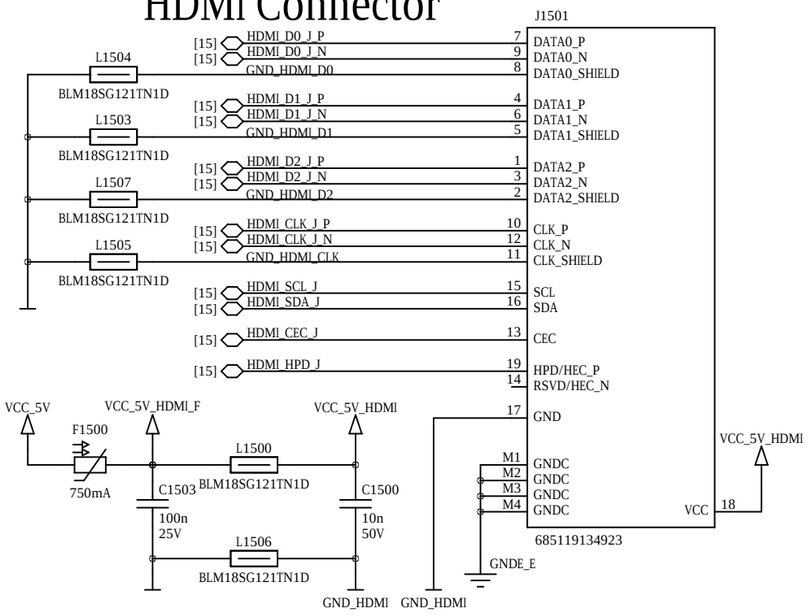

HDMI ESD Protection

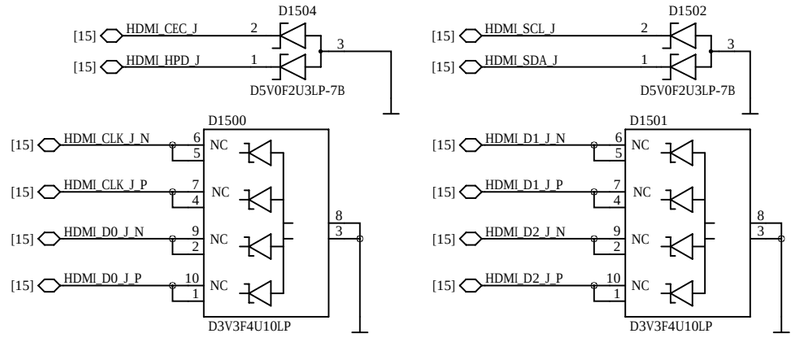

ENCLUSTRA	Project: Mercury+ PE3	Sheet Name: 15_ETHERNET_HDMI_CONNECTORS	Customer No: 0000	Revision: R1.1	DNE = do not equip	Confidential	
	Company: Enclustra GmbH	Copyright: © 2022 by Enclustra GmbH Switzerland	Project No: 420	Designed: MHEI	Date: 25 Oct 2022	Sheet/sheets: 15 / 29	

FMC HPC Connector

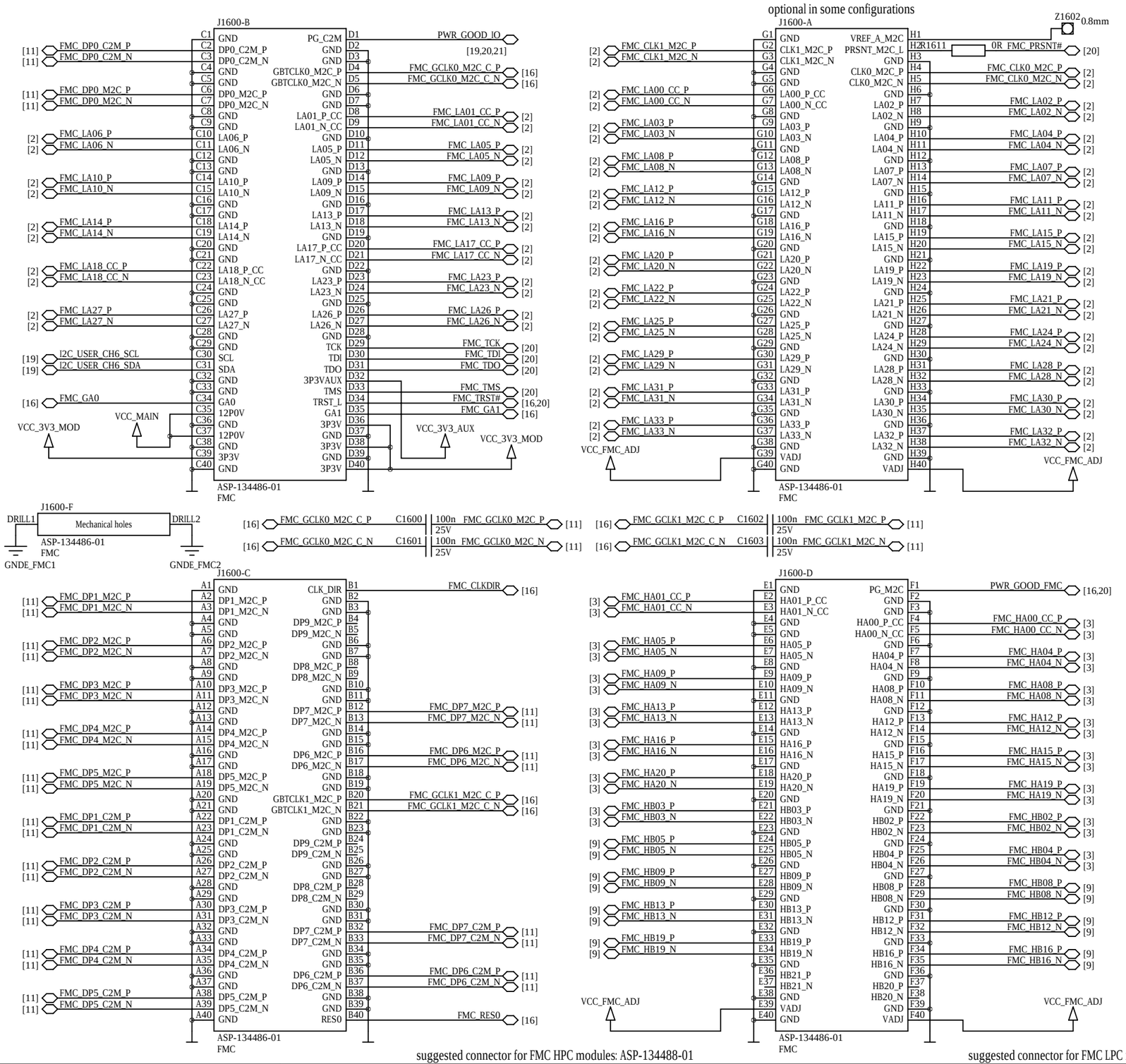

FMC Miscellaneous

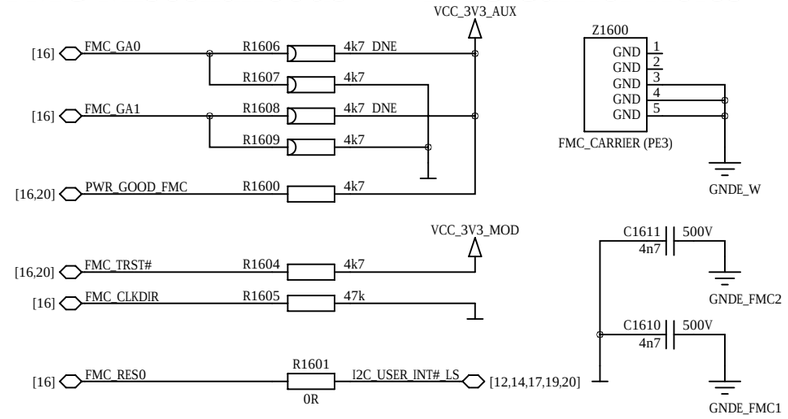

FMC Carrier Holes

FMC Power Filter

not included in user schematics

This part is intentionally left blank.

Project	Mercury+ PE3	Sheet Name	16_FMC_CONNECTOR	Customer No	0000	Revision	R1.1
Company	Enclustra GmbH	Copyright	© 2022 by Enclustra GmbH Switzerland	Project No	420	Designed	MHEI

DNE = do not equip

Confidential

Date 25 Oct 2022

Sheet/sheets 16 / 29

QSFP+ Connector

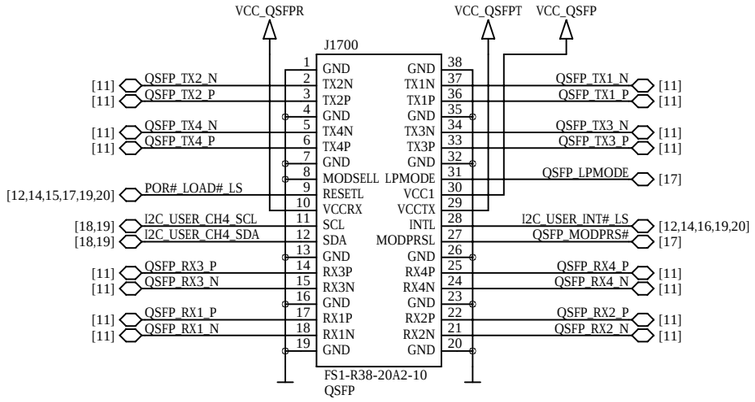

I2C Address: 101 0000 Rw

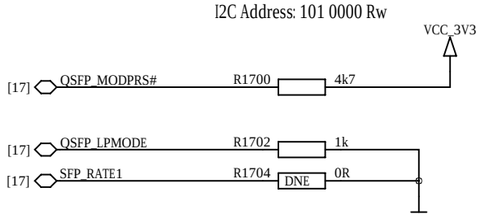

QSFP+ Cage

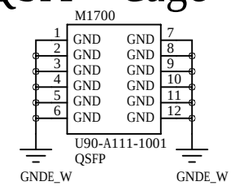

QSFP+ Power Filters

not included in user schematics

This part is intentionally left blank.

SFP+ Connectors

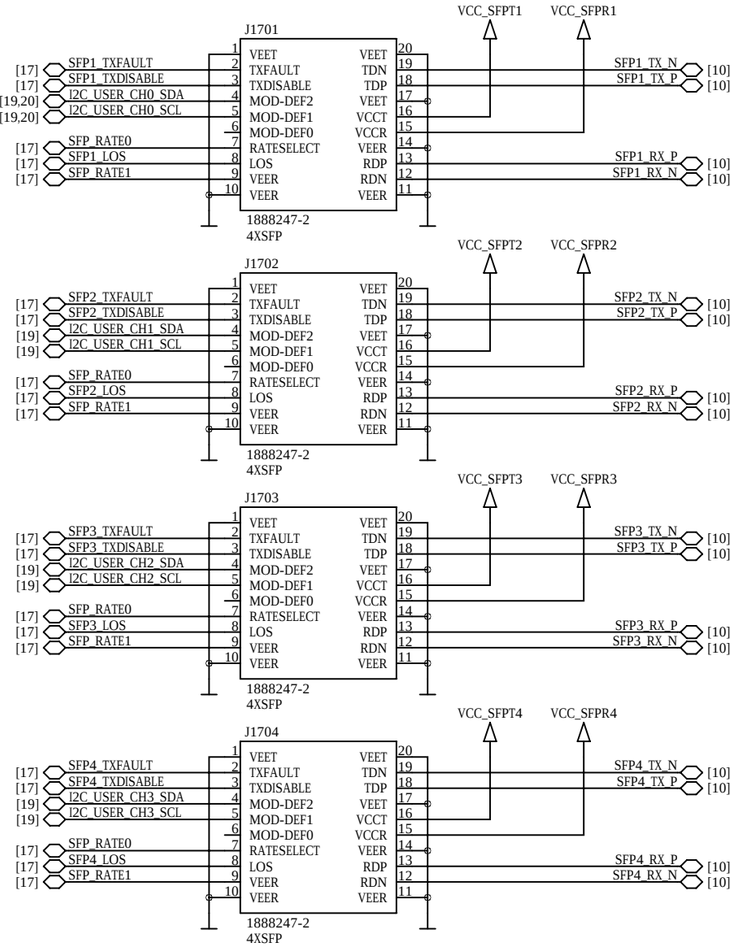

I2C Addresses: 101 0000 Rw

101 0001 Rw

SFP+ Power Filters

not included in user schematics

This part is intentionally left blank.

Quad SFP+ Cage

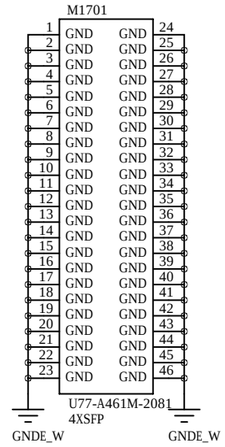

SFP+ I2C Expander

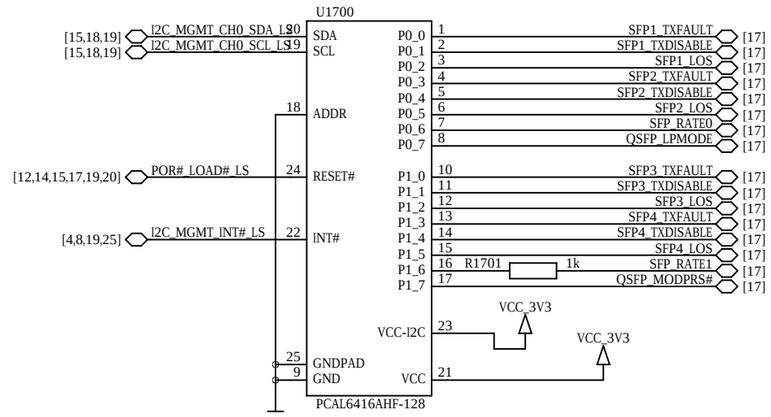

I2C Address: 010 0000 Rw

Clock Generator

Configuration must be implemented over I2C at startup.
NVM OTP configuration memory can only be written once and doing so voids the board warranty.
Generates up to twelve LVDS/HCSL/LVCMOS clocks of 5MHz - 333.33MHz

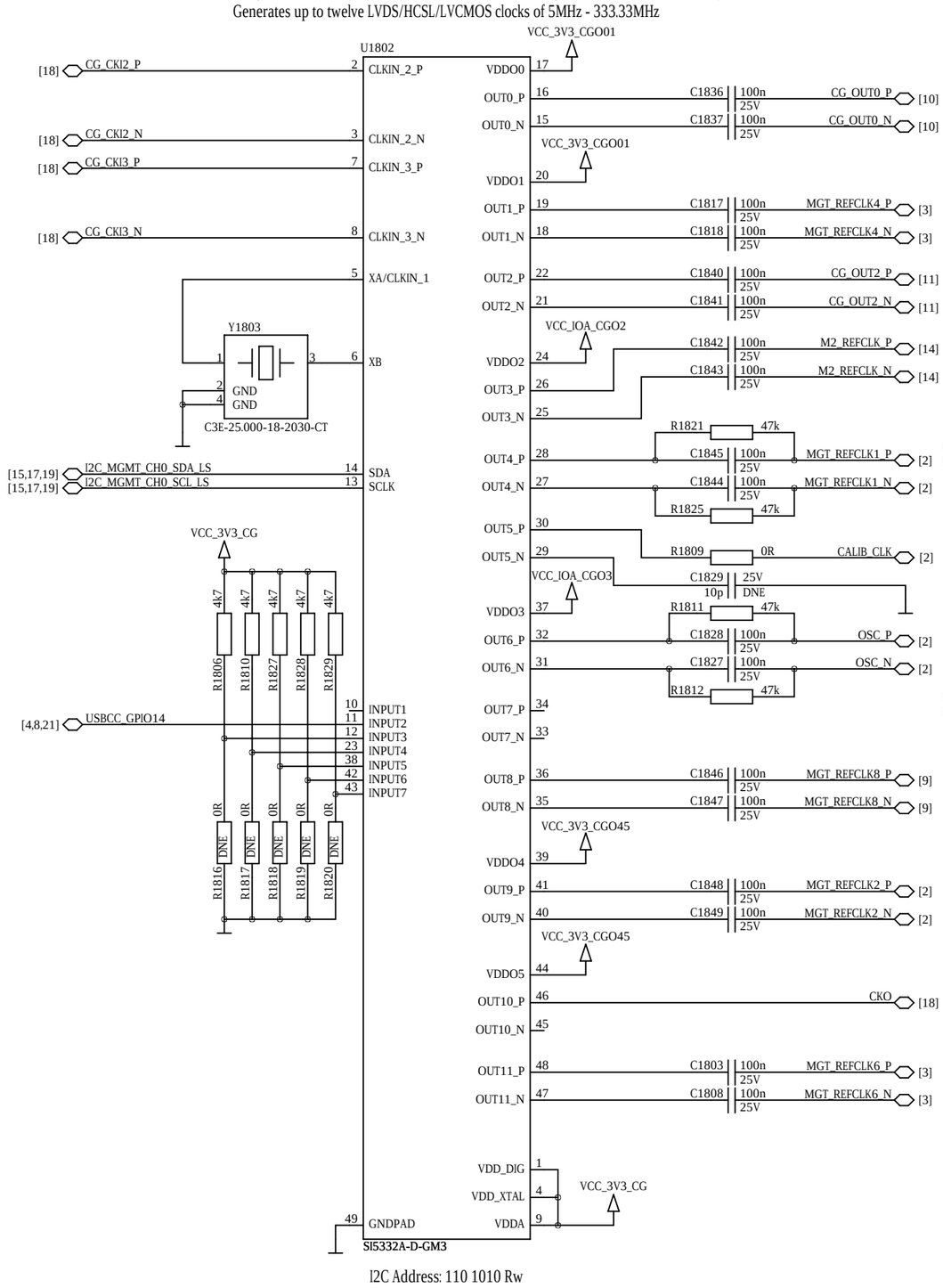

I2C Address: 110 1010 Rw

User Oscillator

optional

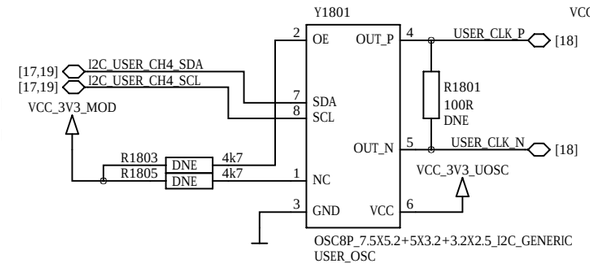

Oscillator 24 MHz & Divider

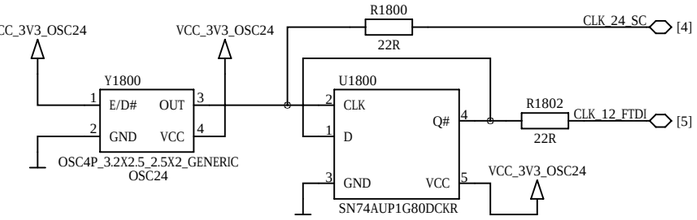

CLK Input Selection

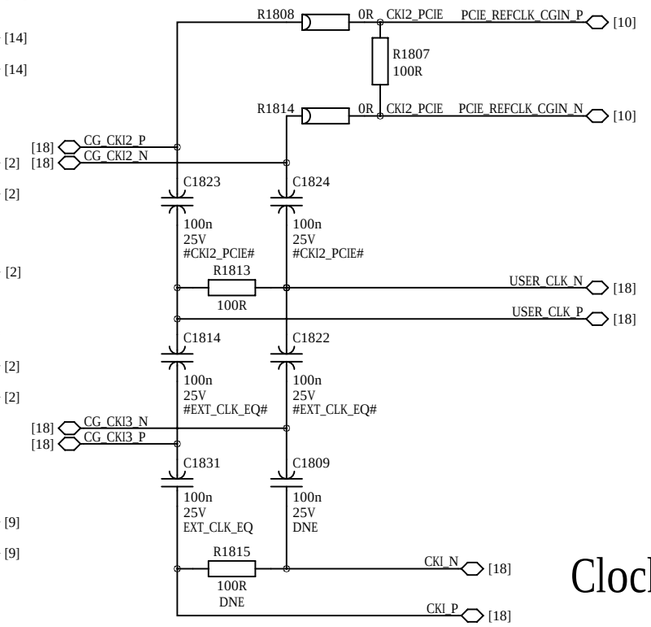

Clock IO Connectors

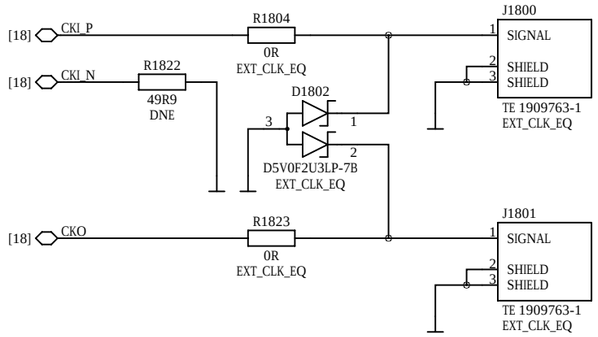

Clock Generator Power Filters

not included in user schematics

This part is intentionally left blank.

ENCLUSTRA	Project	Mercury+ PE3	Sheet Name	18_CLOCK_GENERATOR	Customer No	0000	Revision	R1.1	DNE = do not equip	Confidential
	Company	Enclustra GmbH	Copyright	© 2022 by Enclustra GmbH Switzerland	Project No	420	Designed	MHEI	Date 25 Oct 2022	Sheet/sheets 18 / 29

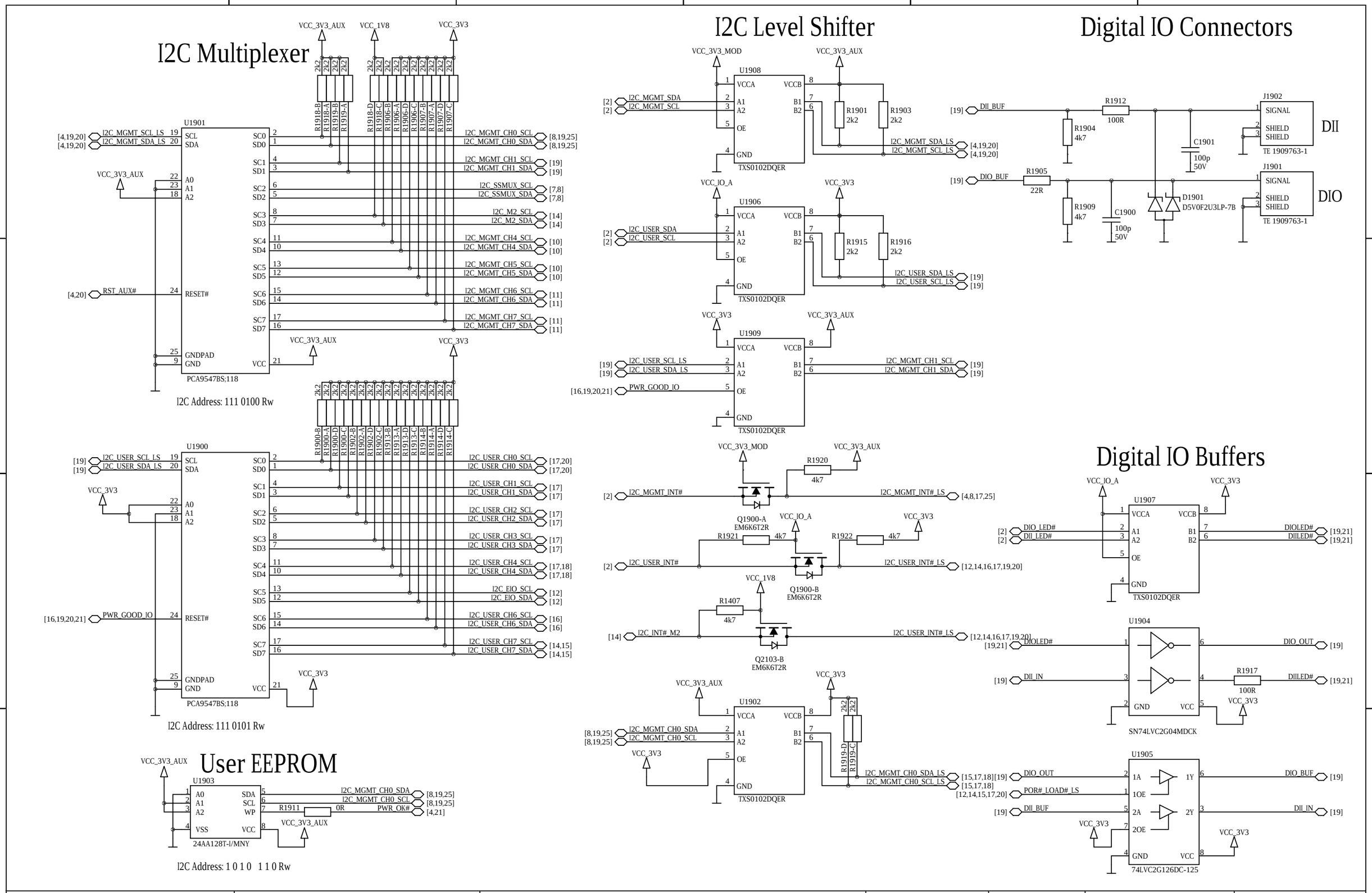

ENCLUSTRA	Project: Mercury+ PE3	Sheet Name: 19_I2C_SDCARD_DIG_IO	Customer No: 0000	Revision: R1.1	DNE = do not equip	Confidential	
	Company: Enclustra GmbH	Copyright: © 2022 by Enclustra GmbH Switzerland	Project No: 420	Designed: MHEI	Date: 25 Oct 2022	Sheet/sheets: 19 / 29	

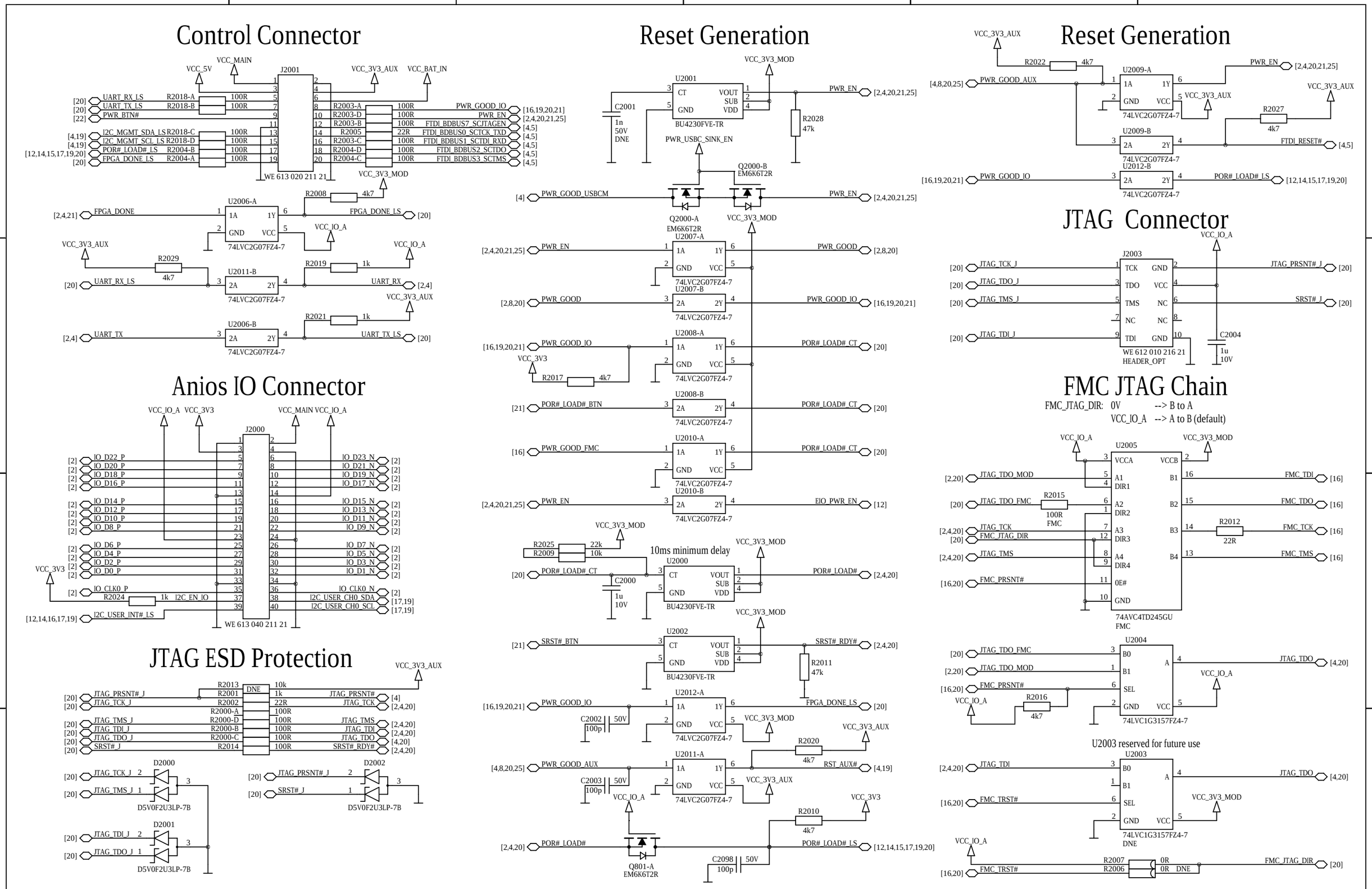

ENCLUSTRA	Project Mercury+ PE3	Sheet Name 20_ANIOS_RESET_JTAG	Customer No 0000	Revision R1.1	DNE = do not equip	Confidential	
	Company Enclustra GmbH	Copyright © 2022 by Enclustra GmbH Switzerland	Project No 420	Designed MHEI	Date 25 Oct 2022	Sheet/sheets 20 / 29	

Power Good LED

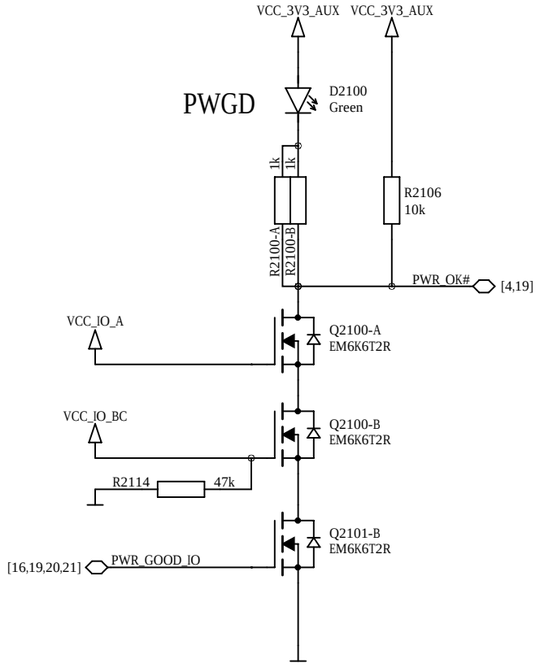

Done LED

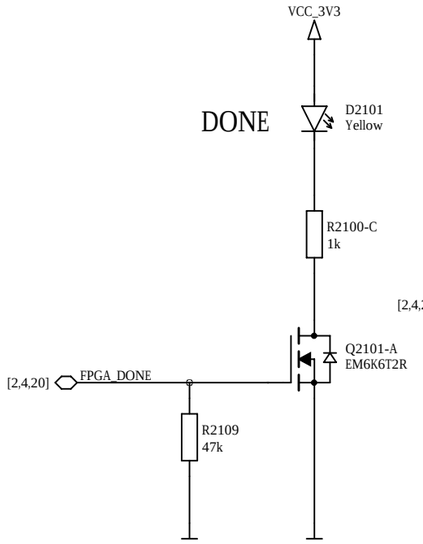

Power Fail LED

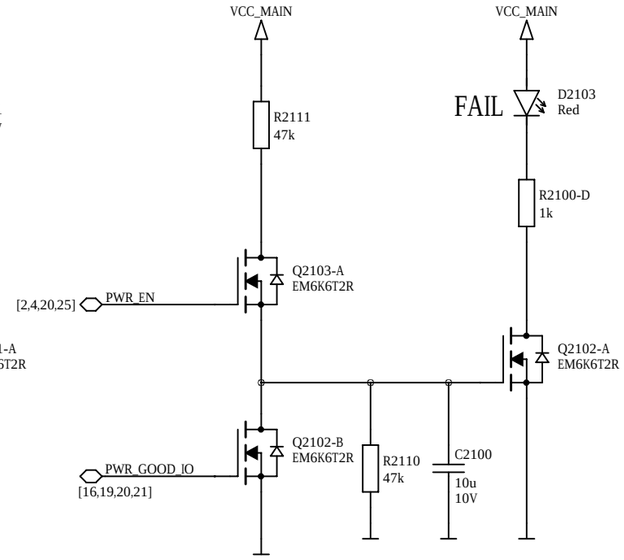

User LEDs

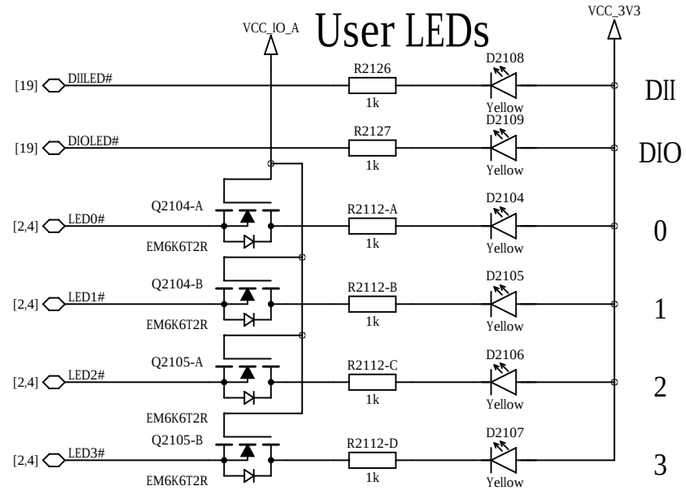

System Controller LEDs

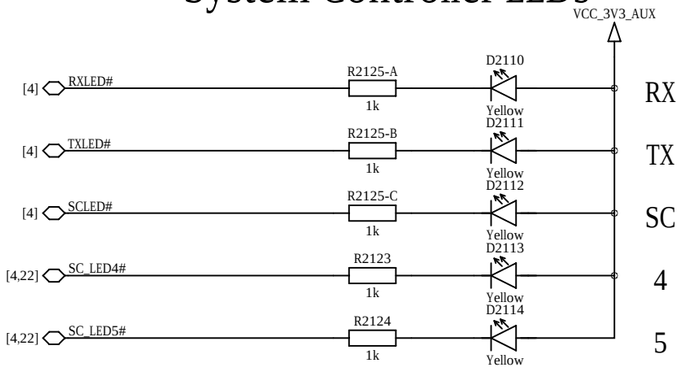

Battery Holder

battery optional

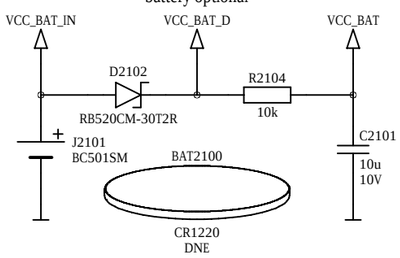

USB Type-C Controller LED

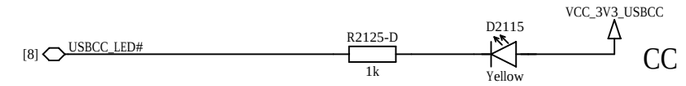

Board Configuration

CFG A

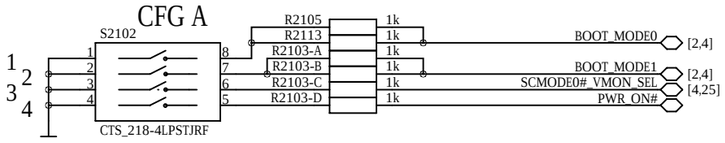

Default: 1 closed, 2 open, 3-4 closed

CFG B

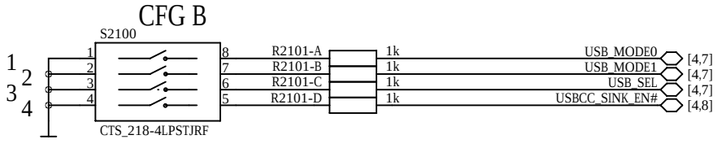

Default: all open

CFG C

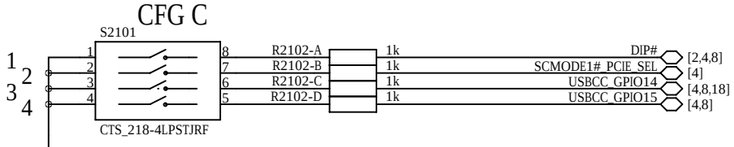

Default: all open

IO Voltage Selection

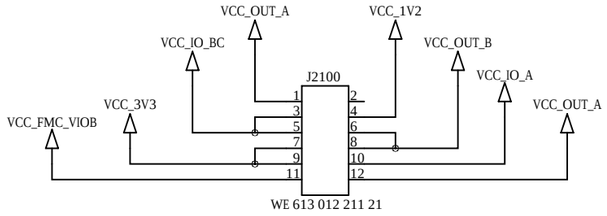

Default Jumpers: 3-5, 6-8 => no I/O voltages
The jumpers need to be set correctly for the users application respecting the supported IO voltage ranges.

Jumper Position	VCC_1V2	VCC_OUT_A	VCC_OUT_B	VCC_3V3
VCC_IO_A	-	10-12	8-10	9-10
VCC_IO_BC	3-4	1-3	5-6	5-7

Buttons

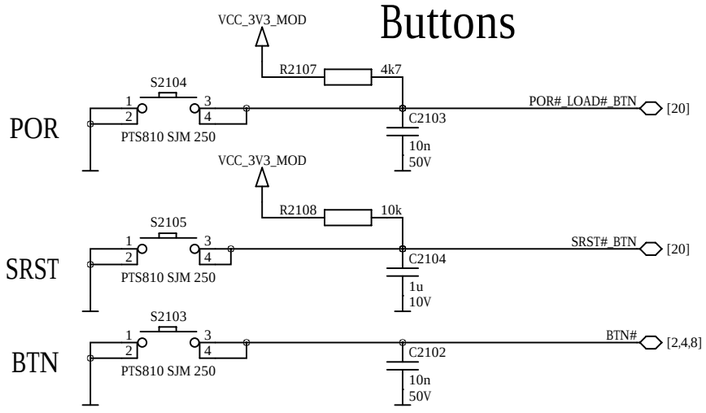

ENCLUSTRA	Project	Mercury+ PE3	Sheet Name	21_USER_INTERFACE	Customer No	0000	Revision	R1.1	DNE = do not equip	Confidential
	Company	Enclustra GmbH	Copyright	© 2022 by Enclustra GmbH Switzerland	Project No	420	Designed	MHEI	Date 25 Oct 2022	Sheet/sheets 21 / 29

External Power Input

12V 5A/11A (external) / 12V 13A (internal)

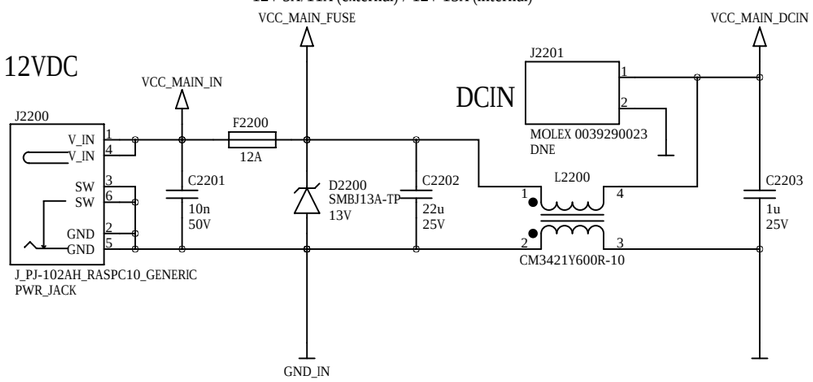

Power Diode

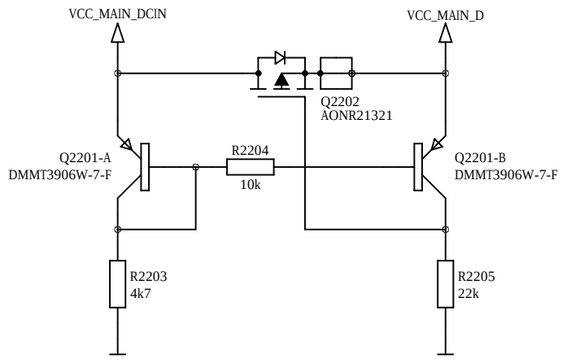

Power Input Control

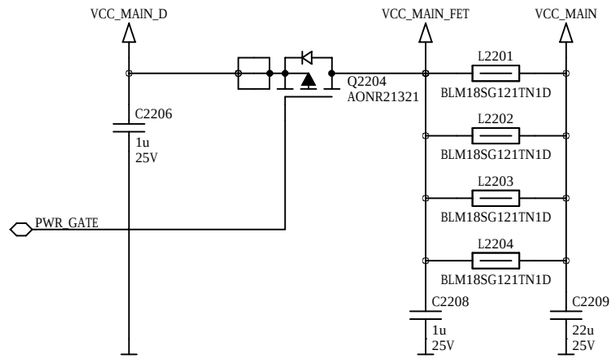

Power Buttons and LED

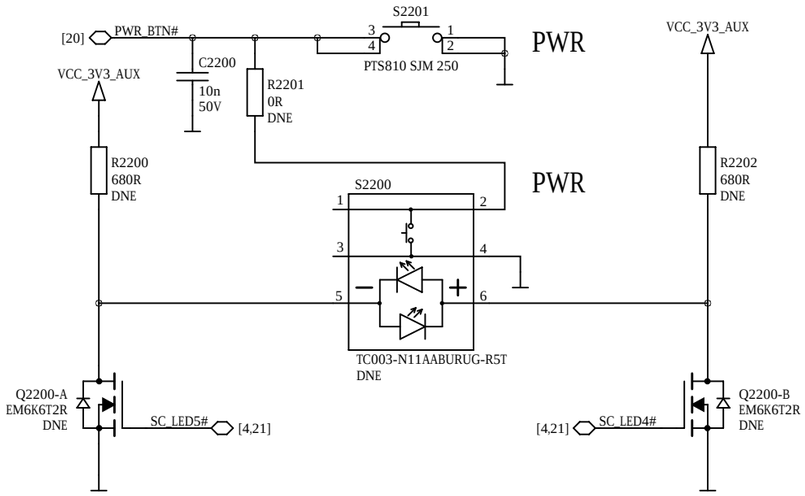

Fan Connector

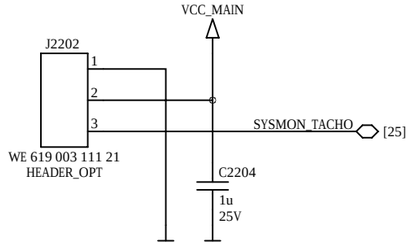

Power Switch Control

not included in user schematics

This part is intentionally left blank.

ENCLUSTRA	Project	Mercury+ PE3	Sheet Name	22_POWER_INPUT	Customer No	0000	Revision	R1.1	DNE = do not equip	Confidential
	Company	Enclustra GmbH	Copyright	© 2022 by Enclustra GmbH Switzerland	Project No	420	Designed	MHEI	Date 25 Oct 2022	Sheet/sheets 22 / 29

Buck Converter 3.3V

3.3V 6A 5%
not included in user schematics

This part is intentionally left blank.

Supported Voltage Ranges

Check the module user manual for its supported voltage ranges

Power Rail	Direction	Range	Tolerance
VCC_MAIN_IN	input	12V	±10%
VCC_MAIN_DCIN	input	12V	±10%
VCC_MAIN_PCIE	input	12V	±10%
VCC_MAIN	output	12V	±10%
VCC_USBC	input	5V - 9V	±5%
VCC_USBC	output	5V	±5%
VCC_3V3	output	3.3V	±5%
VCC_IO_A [1]	output	1.8V - 3.3V	±5%
VCC_IO_BC [1]	output	1.2V - 3.3V	±5%
VCC_BAT_IN	input	3V	-

[1] Voltage depending on IO Voltage Selection

Buck Converter 1.2V

1.2V 2A 5%
not included in user schematics

This part is intentionally left blank.

3.3V MOD Load Switch

not included in user schematics

This part is intentionally left blank.

Buck Converter 5V

5V 6A 5%
not included in user schematics

This part is intentionally left blank.

Buck Converter 1.8V

1.8V 2A 5%
not included in user schematics

This part is intentionally left blank.

LDO AUX 1.8V 300mA

not included in user schematics

This part is intentionally left blank.

USB Type-C Power Input Converter

12V 3.5A 5%
not included in user schematics

This part is intentionally left blank.

ENCLUSTRA	Project	Mercury+ PE3	Sheet Name	24_POWER_1.8V_5V_12V	Customer No	0000	Revision	R1.1	DNE = do not equip		Confidential
	Company	Enclustra GmbH	Copyright	© 2022 by Enclustra GmbH Switzerland	Project No	420	Designed	MHEI	Date	25 Oct 2022	Sheet/sheets 24 / 29

System Monitor

optional in some configurations

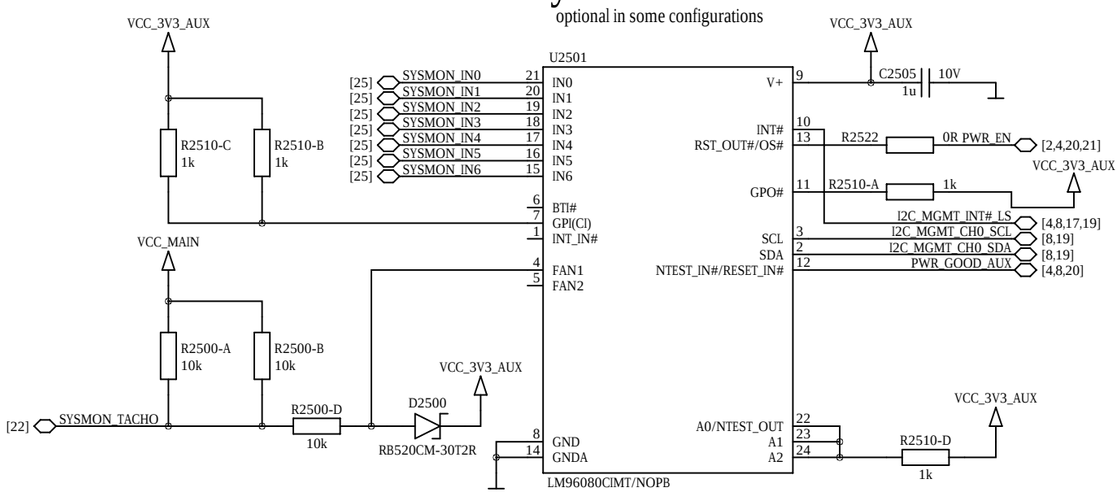

I2C Address: 010 1111 Rw

System Monitor Voltage Sense

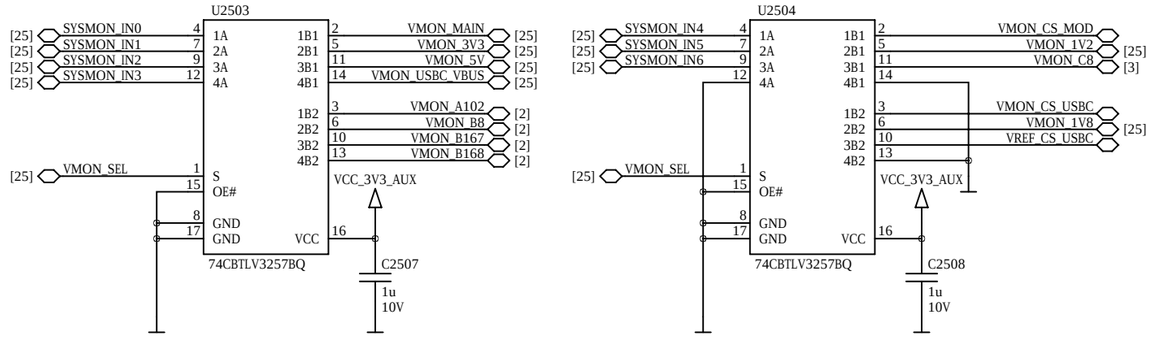

Analog Current Sensors

not included in user schematics

This part is intentionally left blank.

System Monitor Voltage Divider

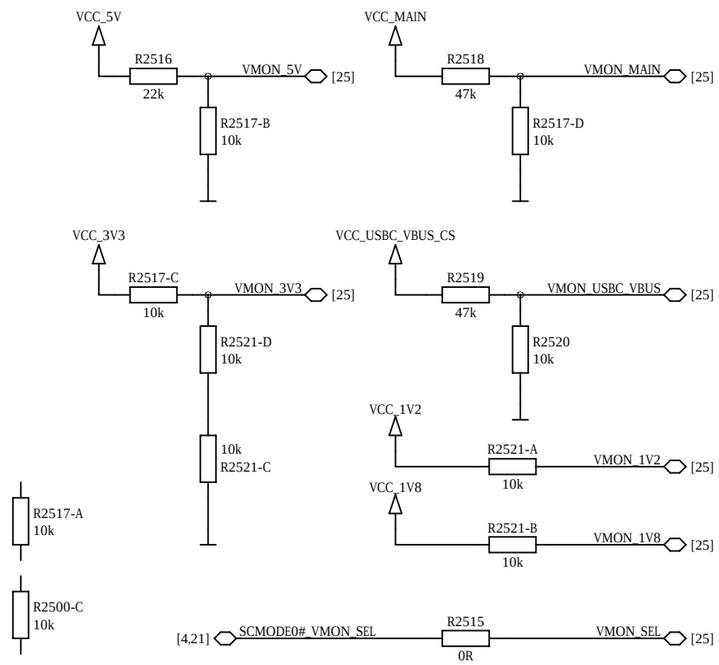

ENCLUSTRA	Project	Mercury+ PE3	Sheet Name	25_SYSTEM_MONITOR	Customer No	0000	Revision	R1.1	DNE = do not equip	Confidential
	Company	Enclustra GmbH	Copyright	© 2022 by Enclustra GmbH Switzerland	Project No	420	Designed	MHEI	Date 25 Oct 2022	Sheet/sheets 25 / 29

Ground Test Points

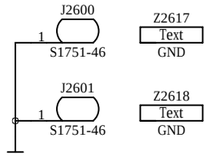

Module Mounting Holes M3

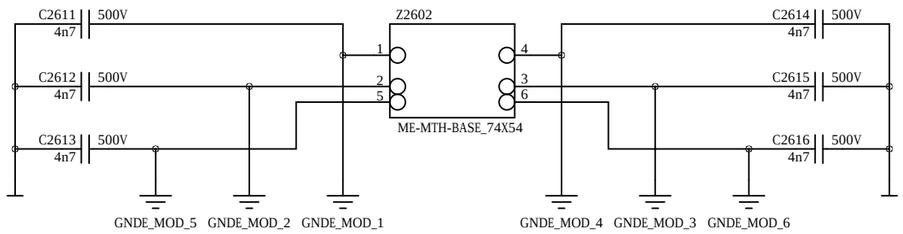

PCIe Bracket

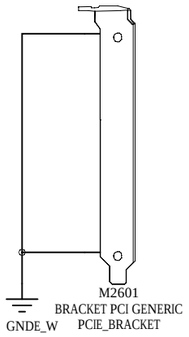

PCB

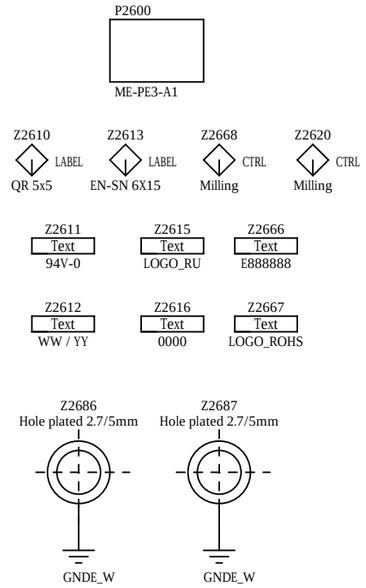

Fiducials

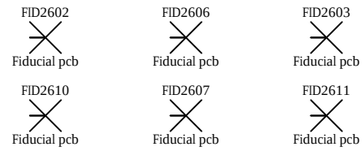

Panel Fiducials

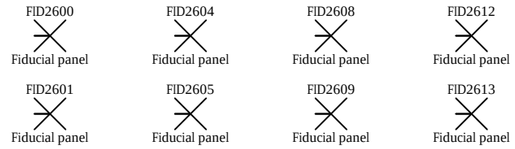

Logo / Text

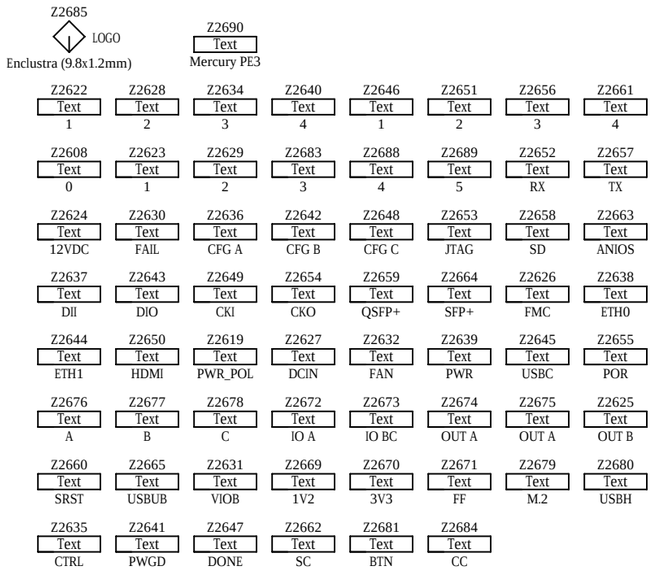

Connector Pin-1 Marking

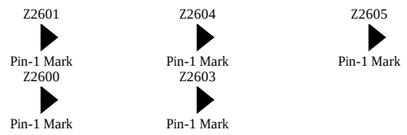

Board Mounting Holes M3

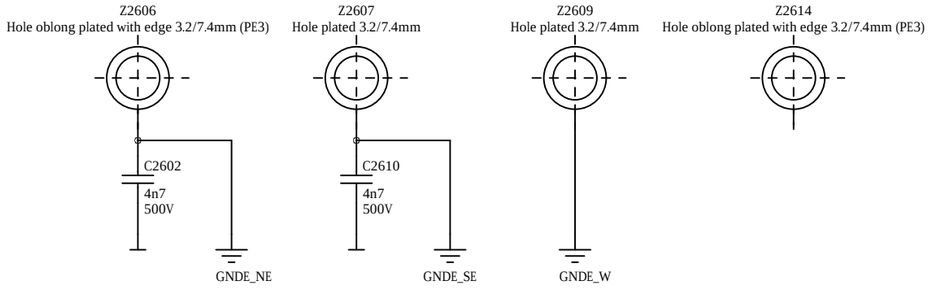

Chassis Ground

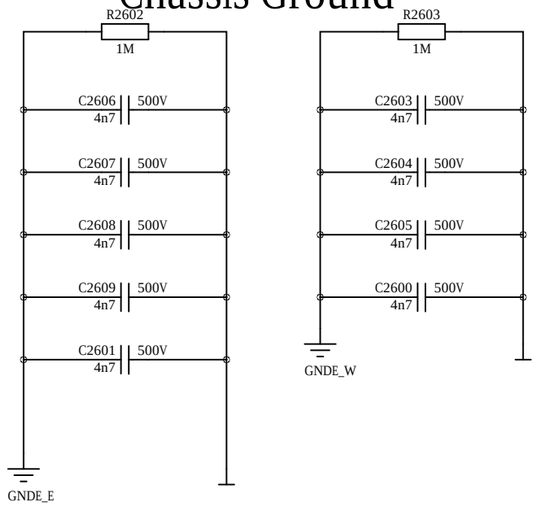

Board Spacers

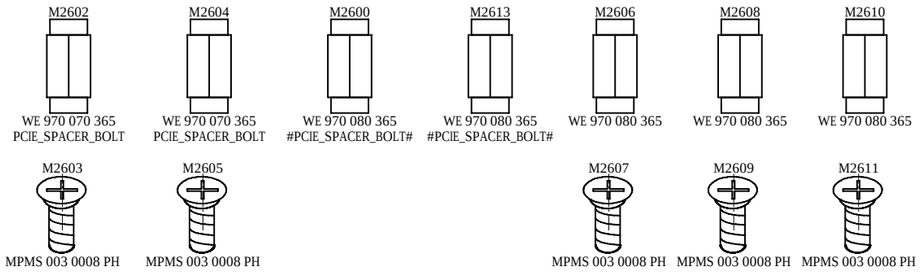

Module Pin-1 Marking

ENCLUSTRA	Project: Mercury+ PE3	Sheet Name: 26_MECHANICS	Customer No: 0000	Revision: R1.1	DNE = do not equip	Confidential	
	Company: Enclustra GmbH	Copyright: © 2022 by Enclustra GmbH Switzerland	Project No: 420	Designed: MHEI	Date: 25 Oct 2022	Sheet/sheets: 26 / 29	

Reserved

ENCLUSTRA	Project Mercury+ PE3	Sheet Name 27_RESERVED	Customer No 0000	Revision R1.1	DNE = do not equip	Confidential
	Company Enclustra GmbH	Copyright	© 2022 by Enclustra GmbH Switzerland	Project No 420	Designed MHEI	Date 25 Oct 2022	Sheet/sheets 27 / 29

Component Options

4XSFP	QSFP	FMC	PWR_JACK	OSC24	USER_OSC	L1U5_6A	HEADER_OPT	FMC_IO1	FMC_IO2	EXUO
M1701, J1701, J1702, J1703 J1704	J1700, M1700	J1600 L1600, L1601, L1602 C1608, C1612, C1613, C1614, C1615	Part J2200A PJ-102AH EN100388 Part J2200B RASPC10 EN104008	Part Y1800:1 ASDMB-24.000MHZ-LC-T EN101221 Part Y1800:2 ASEMB_24.000MHZ-LC-T EN101187 Part Y1800:3 O_24.0-JO32-B-1V3-1-T1-LF EN104079 Part Y1800:4 ECS-3225MVQ-240-BP-TR EN104080	Part Y1801A DSC1123Cl2-100.0000 EN103018	Part L2401A:1 1u5 EN102613 Part L2401A:2 1u5 EN102207 Part L2301A:1 1u5 EN102613 Part L2301A:2 1u5 EN102207	J2003, J2202	R900-R915 or R916-R931	R932-R947 or R948-R963 R964-R967 or R968-R971	To support EXUO devices R1403, R1405 To support PXUO devices equip R1404, R1406 L1401, C1402, C1403

Component Assembly

Enclustra Product	4XSFP	QSFP	FMC	PWR_JACK	OSC24	USER_OSC	L1U5_6A	HEADER_OPT	FMC_IO1	FMC_IO2	EXUO
Variant EN104532:0 ME-PE3-C-R1.1	Option EN104532:1 4XSFP DNE	Option EN104532:2 QSFP	Option EN104532:3 FMC	Option EN104532:5 PWR_JACK EN100388	Option EN104532:7 OSC24 EN101221	Option EN104532:8 USER_OSC DNE	Option EN104532:10 L1U5_6A EN102613	Option EN104532:11 HEADER_OPT	Option EN104532:12 FMC_IO1 DNE	Option EN104532:13 FMC_IO2 DNE	Option EN104532:16 EXUO
Variant EN104531:0 ME-PE3-4S-C-R1.1	Option EN104531:1 4XSFP	Option EN104531:2 QSFP	Option EN104531:3 FMC	Option EN104531:5 PWR_JACK EN100388	Option EN104531:7 OSC24 EN101221	Option EN104531:8 USER_OSC DNE	Option EN104531:10 L1U5_6A EN102613	Option EN104531:11 HEADER_OPT	Option EN104531:12 FMC_IO1 DNE	Option EN104531:13 FMC_IO2 DNE	Option EN104531:16 EXUO
Variant EN104533:0 ME-PE3-4S-C-X1-R1.1	Option EN104533:1 4XSFP	Option EN104533:2 QSFP	Option EN104533:3 FMC	Option EN104533:5 PWR_JACK DNE	Option EN104533:7 OSC24 EN101221	Option EN104533:8 USER_OSC DNE	Option EN104533:10 L1U5_6A EN102613	Option EN104533:11 HEADER_OPT DNE	Option EN104533:12 FMC_IO1 DNE	Option EN104533:13 FMC_IO2 DNE	Option EN104533:16 EXUO

Component Options

PCIE_SPACER_BOLT	PCIE_BRACKET	M.2_EQ	EXT_CLK_EQ	CKI2_PCIE						
M2602, M2604 or M2600, M2613		J1400, R972, R974 or R973, R975	C1831, J1800 J1801, R1804, R1823 D1802 or C1814, C1822	R1808, R1814 or C1823, C1824						

Component Assembly

PCIE_SPACER_BOLT	PCIE_BRACKET	M.2_EQ	EXT_CLK_EQ	CKI2_PCIE						
Option EN104532:15 PCIE_SPACER_BOLT DNE	Option EN104532:4 PCIE_BRACKET DNE	Option EN104532:17 M.2_EQ	Option EN104532:18 EXT_CLK_EQ	Option EN104532:19 CKI2_PCIE						
Option EN104531:15 PCIE_SPACER_BOLT DNE	Option EN104531:4 PCIE_BRACKET DNE	Option EN104531:17 M.2_EQ	Option EN104531:18 EXT_CLK_EQ	Option EN104531:19 CKI2_PCIE						
Option EN104533:15 PCIE_SPACER_BOLT DNE	Option EN104533:4 PCIE_BRACKET DNE	Option EN104533:17 M.2_EQ	Option EN104533:18 EXT_CLK_EQ	Option EN104533:19 CKI2_PCIE						