# System Controller

## User Manual for Mercury+ PE3 base board

### Purpose

The purpose of this document is to present the characteristics of System Controller to the user, and to provide the user with a comprehensive guide to understanding and using the System Controller.

### Summary

This document first gives an overview of the System Controller followed by a detailed description of its features and configuration options.

| Product Information | Code | Name |
|---|---|---|
| Product | SC | System Controller |

| Document Information | Reference | Version | Date |
|---|---|---|---|
| Reference / Version / Date | D-0000-215-009 | 03 | 17.12.2021 |

| Approval Information | Name | Position | Date |
|---|---|---|---|
| Written by | ABUE | Design Engineer | 17.12.2021 |
| Verified by | GKOE | Manager, Platware | TODO |
| Approved by | DIUN | Manager, BU SP | TODO |

## Copyright Reminder

Copyright 2022 by Enclustra GmbH, Switzerland. All rights are reserved.

Unauthorized duplication of this document, in whole or in part, by any means is prohibited without the prior written permission of Enclustra GmbH, Switzerland.

Although Enclustra GmbH believes that the information included in this publication is correct as of the date of publication, Enclustra GmbH reserves the right to make changes at any time without notice.

All information in this document is strictly confidential and may only be published by Enclustra GmbH, Switzerland.

All referenced trademarks are the property of their respective owners.

## Document History

| Version | Date | Author | Comment |
|---|---|---|---|
| 01 | 31.01.2020 | ABUE | First release |
| 02 | 08.07.2021 | ABUE | Minor fixes in documentation of register bank |
| 03 | 25.11.2021 | ABUE | Updated for Mercury PE3+ support<br>Reset sequence section added |

## Table of Contents


**1 Design Description 5**
1.1 Version . . . 5
1.2 Overview . . . 5
1.3 Board Power Control . . . 6
1.4 Reset Sequence . . . 7
1.5 System Controller Config . . . 7
1.6 LEDs . . . 8
1.6.1 SC LED . . . 8
1.6.2 UART LEDs . . . 8
1.6.3 LED 4 . . . 8
1.6.4 LED 5 . . . 8
1.7 Action . . . 8
1.8 Interrupt . . . 8
1.9 GPIO . . . 9
1.10 I2C . . . 9
1.10.1 I2C Register Bank . . . 9
1.10.2 I2C Master . . . 10
1.11 FTDI . . . 10
1.11.1 Passive Serial/Slave Serial Configuration . . . 10
1.11.2 SPI for Serial Flash Programming . . . 10
1.11.3 I2C . . . 10
1.11.4 JTAG . . . 10
1.11.5 UART . . . 10
1.12 I2C Initialization . . . 11
1.12.1 MGT multiplexer Initialization . . . 11
1.13 Pin Multiplexer . . . 14
1.14 USB . . . 14
1.15 Boot Mode . . . 14
1.16 Version . . . 14

**2 I2C Register Bank 15**
2.1 Register Field Types . . . 15
2.2 Register Overview . . . 15
2.3 Detailed Register Description . . . 16
2.3.1 System Controller Configuration Register (0x00) . . . 16
2.3.2 System Controller Status Register (0x01) . . . 17
2.3.3 Board Power Control Register (0x02) . . . 17
2.3.4 Board Power Status Register (0x03) . . . 17
2.3.5 Board Power-Button Time Register (0x04) . . . 17
2.3.6 Module Power Control Register (0x05) . . . 18
2.3.7 Module Power Status Register (0x06) . . . 18
2.3.8 Debug Register (0x07) . . . 18
2.3.9 Error Register (0x08) . . . 19
2.3.10 Action Register (0x0A) . . . 19
2.3.11 Interrupt Status Register (0x0B) . . . 19
2.3.12 Interrupt Enable Register (0x0C) . . . 20
2.3.13 Interrupt Edge Select Register (0x0D) . . . 20
2.3.14 Boot Configuration Enable Register (0x0E) . . . 21
2.3.15 Boot Configuration Read Register (0x0F) . . . 21
2.3.16 Boot Configuration Write Register (0x10) . . . 21
2.3.17 Miscellaneous GPIO Enable Register (0x11) . . . 22
2.3.18 Miscellaneous GPIO Read Register (0x12) . . . 22
2.3.19 Miscellaneous GPIO Write Register (0x13) . . . 23
2.3.20 EIO GPIO Multiplexer 0 Register (0x14) . . . 24

2.3.21 EIO GPIO Multiplexer 1 Register (0x15) . . . 25
2.3.22 EIO GPIO Enable Register (0x16) . . . 26
2.3.23 EIO GPIO Read Register (0x17) . . . 26
2.3.24 EIO GPIO Write Register (0x18) . . . 27
2.3.25 USB GPIO Enable Register (0x19) . . . 27
2.3.26 USB GPIO Read Register (0x1A) . . . 28
2.3.27 USB GPIO Write Register (0x1B) . . . 28
2.3.28 GPO Register (0x1C) . . . 28
2.3.29 GPIO 0 Enable Register (0x1D) . . . 29
2.3.30 GPIO 0 Read Register (0x1E) . . . 29
2.3.31 GPIO 0 Write Register (0x1F) . . . 30
2.3.32 GPIO 1 Enable Register (0x20) . . . 30
2.3.33 GPIO 1 Read Register (0x21) . . . 31
2.3.34 GPIO 1 Write Register (0x22) . . . 31
2.3.35 GPIO 2 Multiplexer 0 Register (0x23) . . . 32
2.3.36 GPIO 2 Multiplexer 1 Register (0x24) . . . 32
2.3.37 GPIO 2 Enable Register (0x25) . . . 33
2.3.38 GPIO 2 Read Register (0x26) . . . 33
2.3.39 GPIO 2 Write Register (0x27) . . . 34
2.3.40 Hardware ID Register (0x28) . . . 34
2.3.41 Version Year MSB Register (0x2B) . . . 34
2.3.42 Version Year LSB Register (0x2C) . . . 34
2.3.43 Version Month Register (0x2D) . . . 35
2.3.44 Version Day Register (0x2E) . . . 35

**3 Upgrade 36**
3.1 Upgrade using Enclustra Module Configuration Tool . . . 36

# 1 Design Description

## 1.1 Version

This document is valid for firmware version 31.01.2022 of the System Controller.

## 1.2 Overview

Figure 1 shows a block diagram of the System Controller design. A description of each block can be found in the following sections.

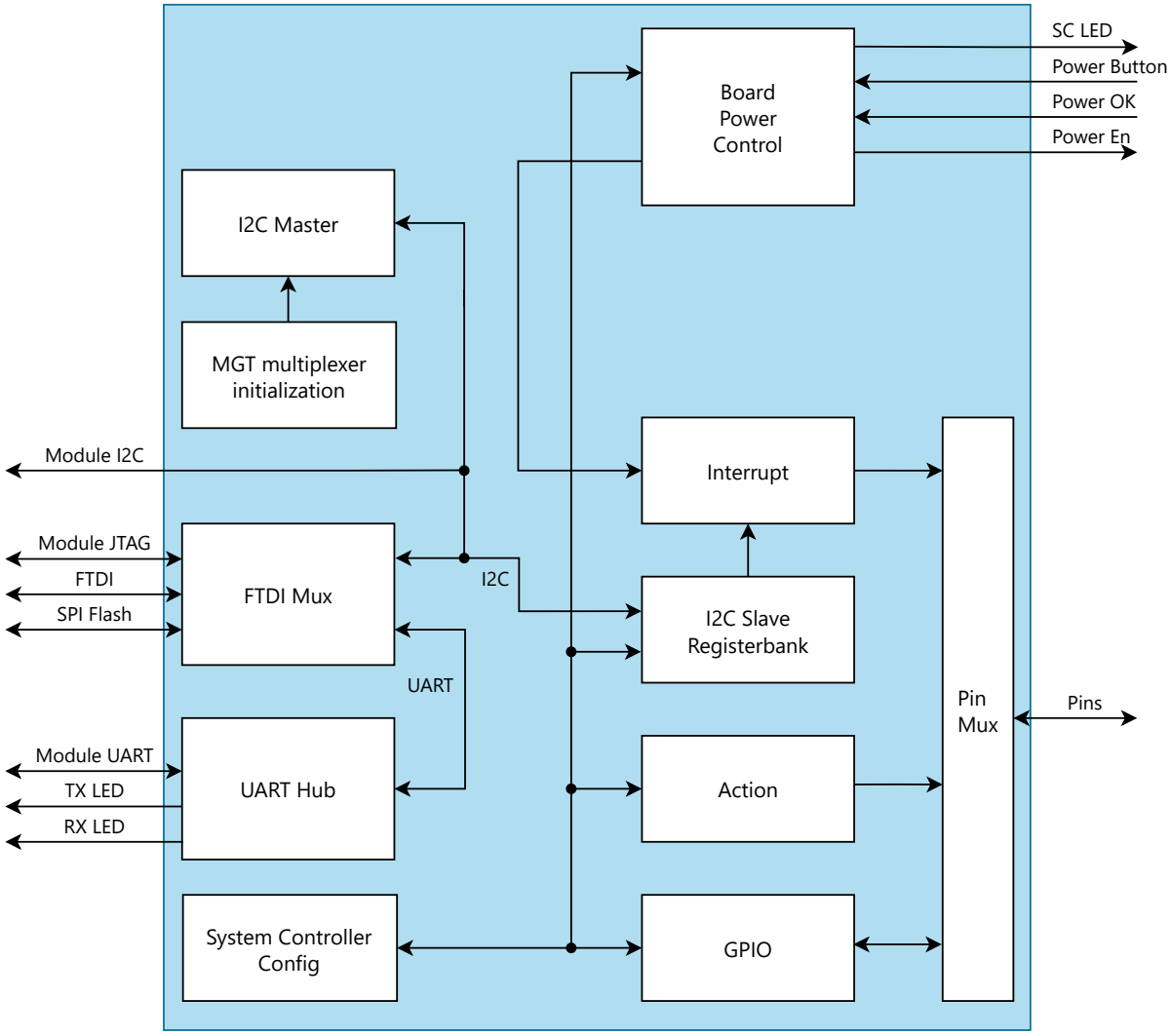


*Figure 1: System Controller Overview*

## 1.3 Board Power Control

Figure 2 shows the state machine to control the board power. If the DIP switch CFG A 4 (signal PWR_ON#) on the base board is enabled, the board is always powered and the board power control state machine has no effect. If the DIP switch CFG A 4 on the base board is disabled, the board power can be enabled by pressing the power button. If the power button is pressed while the board is powered, the board power is turned off.

The button press duration until the power is turned off can be configured by BoardPowerButtonTime register (address 0x04) from disabling power immediately up to 12.75 seconds in steps of 50 milliseconds (default setting is 3 seconds). If the button is pressed and released before the configured time has elapsed, the power is not turned off. If the power button interrupt is enabled (see section 1.8), the board power will not be turned off but instead an interrupt is generated to allow the user software to shut down the device in a controlled way. The board power can be disabled immediately by bit 0 in BoardPowerControl register (address 0x02) regardless if the power button interrupt is enabled or not. As alternative to pressing the power button, the power can also be enabled by writing 0x01 to BoardPowerControl register (address 0x02).

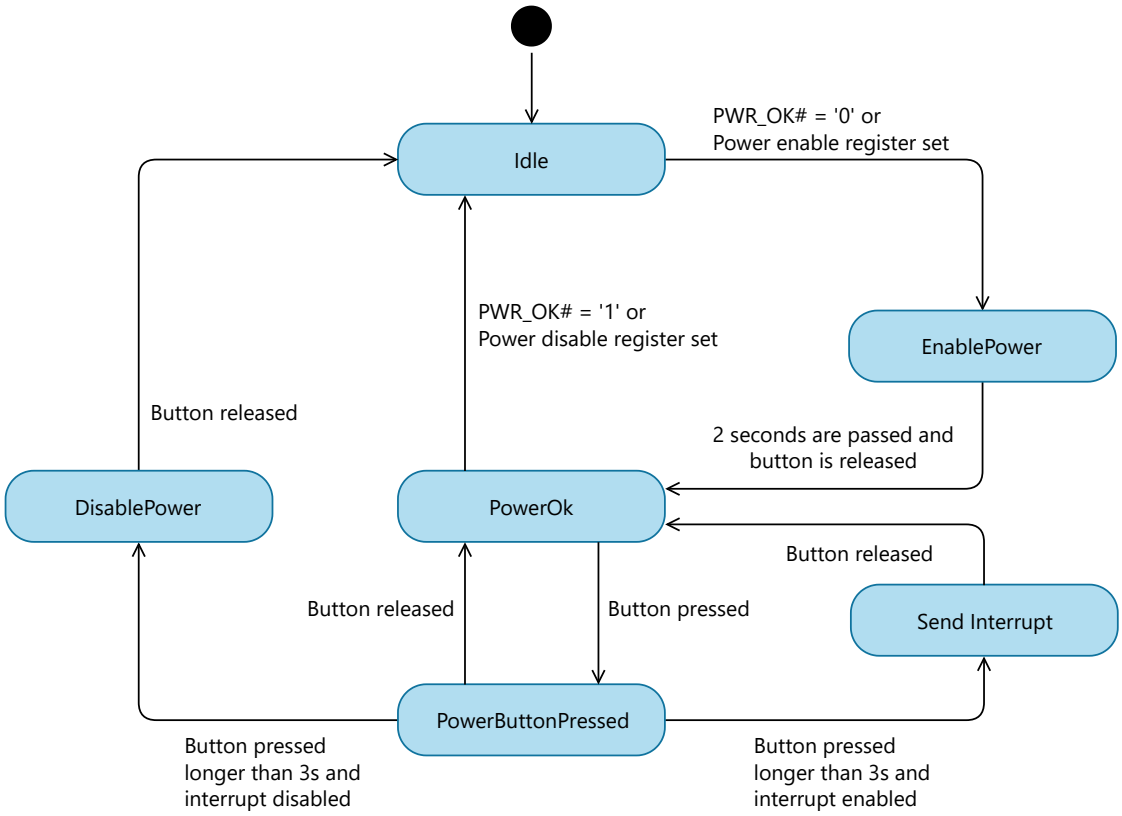


*Figure 2: Board Power Control FSM*

## 1.4 Reset Sequence

Figure 3 shows the reset sequence of the attached module. At power up, the System Controller performs an internal reset and waits for 10ms to ensure the power supply is stable. The boot process begins when the active low signal PWR_OK# is asserted. If PWR_OK# is active before the internal reset has completed, the boot process starts immediately after the internal reset. During the boot process, the I2C master initializes the I2C devices while holding the attached module in reset. See section 1.12 for a detailed description of the I2C device initialization.

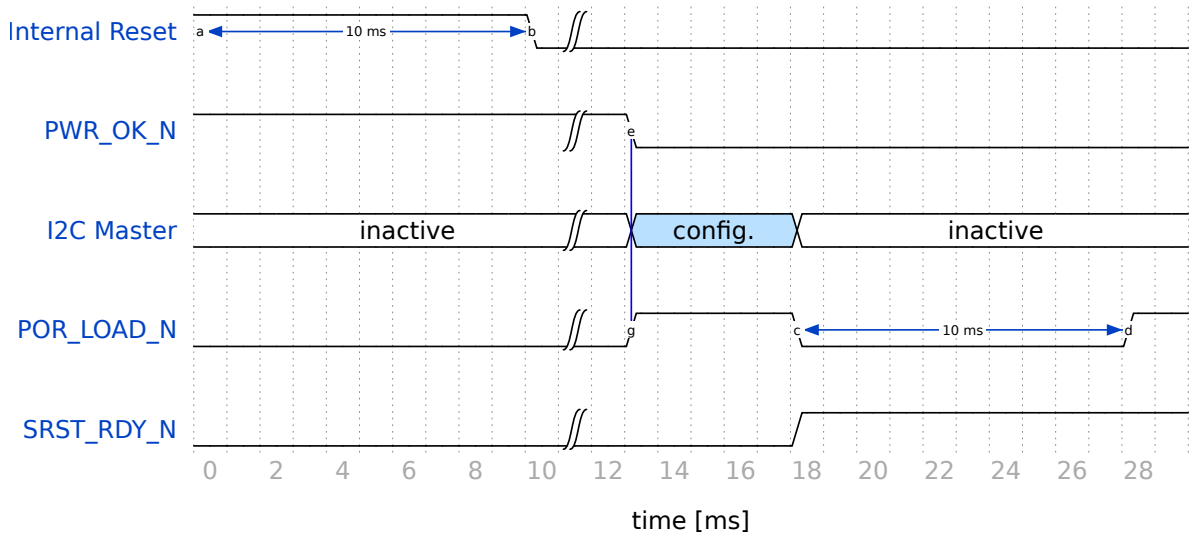


*Figure 3: Reset Sequence*

## 1.5 System Controller Config

The System Controller configuration unit generates the internal reset signal for the System Controller logic. This reset signal becomes active after powering the System Controller and it is deactivated after 10ms. Before the reset is deactivated, the values of some specific pins are sampled and stored. Table 1 shows a list of all pins latched at startup and their usage. The stored value of each of these pins can be read using the registers listed in table 1.

| Pin | Register | Function |
|---|---|---|
| SCMODE0#_VMON_SEL | ScStatus (0x01) bit 0 | Enable initial MGT multiplexer configuration:<br>0 = Disabled<br>1 = Enabled |
| SCMODE1#_PCIE_SEL | ScStatus (0x01) bit 1 | Select initial MGT multiplexer configuration:<br>0 = M.2, USB 3.0, Display Port<br>1 = PCIe |
| FTDI_BCBUS1_DONE_HWID0# | HwId (0x28) bit 0 | Hardware ID 0 |
| FTDI_BCBUS2_SRSTRDY#_HWID1# | HwId (0x28) bit 1 | Hardware ID 1 |
| FTDI_BCBUS3_PORLOAD#_HWID2# | HwId (0x28) bit 2 | Hardware ID 2 |
| FTDI_BCBUS0_LED_HWID3# | HwId (0x28) bit 3 | Hardware ID 3 |
| USB_SEL | ScStatus (0x01) bit 2 | Not used on this product |

*Table 1: Pins Latched at Startup*

The configuration unit also controls the System Controller LED (see section 1.6) and generates a pulse to

trigger the initialization of the registerbank depending on the detected hardware ID.

## 1.6 LEDs

### 1.6.1 SC LED

The System Controller LED is constantly blinking at an interval of one second. The brightness is reduced when the power good signal is inactive (pin PWR_OK# = high). The blinking frequency is twice as fast while the module is held in reset (pin SRST#_RDY# = low or POR#_LOAD# = low).

### 1.6.2 UART LEDs

The RX and TX LEDs are flashing when activity on the UART bus is detected. For better visibility, each of the LEDs are enabled for at least 100ms.

### 1.6.3 LED 4

LED 4 can be enabled by bit 0 in ScConfig register (address 0x00).

### 1.6.4 LED 5

LED 5 can be enabled by bit 2 in GPO register (address 0x1C).

## 1.7 Action

The action unit allows to pull following signals low for 10ms:

- FTDI_RESET#
- PWR_EN
- POR#_LOAD#
- SRST#_RDY#

This functionality is controlled by the Action register (address 0x0A). Writing 1 to one of these bits triggers an action to pull the corresponding signal low for 10 milliseconds. After the 10 milliseconds passed, the signals are released to high impedance state. All signals are independent of each other. They can be triggered simultaneously or one by one.

## 1.8 Interrupt

An edge triggered interrupt can be generated by following sources:

| Interrupt Source | Trigger |
|---|---|
| USBC_UFP | Rising or falling edge on pin USBC_UFP |
| PCIE_PERST# | Rising or falling edge on pin PCIE_PERST# |
| PCIE_WAKE# | Rising or falling edge on pin PCIE_WAKE# |
| SDCARD_CD# | Rising or falling edge on pin SDCARD_CD# |
| M2_PERST# | Rising or falling edge on pin M2_PERST# |
| FF_MODPRS# | Rising or falling edge on pin FF_MODPRS# |
| Power button | Power button is pressed longer than configured time in BoardPowerButtonTime register (address 0x04) |

*Table 2: Possible Interrupt Sources*

The active edge can be selected by InterruptEdge register (address 0x0D) for all interrupts except power button interrupt. The power button interrupt generation is explained in detail in section 1.3.

When an interrupt occurs, the I2C_MGMT_INT#_LS signal is driven low until the interrupt flag is cleared. The interrupt flags are cleared by writing any value to the InterruptStatus register (address 0x0B). Note that all flags are cleared simultaneously, it is not possible to clear single flags.

As alternative to the I2C_MGMT_INT#_LS pin, the interrupt signal can be routed to following pins, controlled by Gpio2Mux0 register (address 0x23) and Gpio2Mux1 register (address 0x24):

- SIO1
- SIO0_PERST#

## 1.9 GPIO

Some pins of the System Controller can be used as GPIO. The GPIO functionality can be controlled using three registers: enable, write and read.

If the GPIO pin is used as input, the enable register needs to be set to 0 to disable the output driver. The signal value can be read using the read register. By default, all GPIO pins are configured as inputs.

If the GPIO pin is used as output, the enable register needs to be set to 1. The output value of the pin can be set by the write register.

## 1.10 I2C

The System Controller's internal I2C bus is always connected to the I2C bus of the SoC/FPGA.
Only standard mode is supported with a transfer speed of 100kHz. There is no arbitration logic for multi master and clock stretching is not supported.

### 1.10.1 I2C Register Bank

The I2C register bank is located at bus address 0x0D. Figure 4 shows how to access the register bank by I2C. All bytes are transfered MSB first.

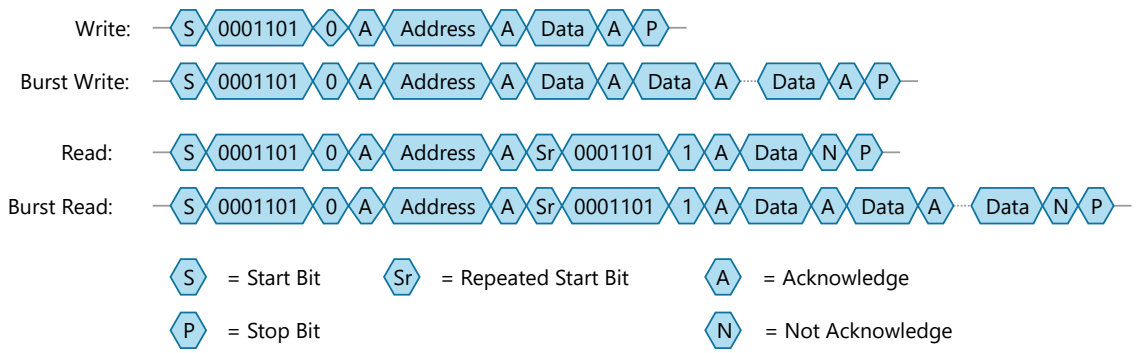


*Figure 4: Register Bank Access by I2C bus*

For consecutive read and write transactions, the address is incremented after each written/read byte. A transaction must be completed within 40ms, otherwise the internal state machine resets itself to prevent from blocking. The debug register (address 0x07) can be used to test read/write access.

### 1.10.2 I2C Master

The I2C master is only active while the FPGA/SoC is in reset (SRST#_RDY# asserted). It is used by the MGT multiplexer initialization unit to configure the multiplexer devices every time after pin PWR_OK# is driven low. The configuration is depending on SCMODE1#_PCIE_SEL. An input value of SCMODE1#_PCIE_SEL=1 configures the multiplexer for PCIe operation, a value of 0 for M.2, USB 3.0 and Display Port operation.

## 1.11 FTDI

Pin USB_SEL selects to which USB connector the FTDI USB port is connected. This signal is set by DIP switch CFG B 3. It can be manually overridden by UsbGpioEn (address 0x19) and UsbGpioWrite (address 0x1B) registers.

The signals from the FTDI FT2232 can be multiplexed to support multiple serial protocols. The selection is done using the FTDI driven signals FTDI_BCBUS6_MODE1 (Mode 1) and FTDI_BCBUS5_MODE0 (Mode 0). Following modes are supported:

| Mode 1 | Mode 0 | FTDI A | FTDI B |
|---|---|---|---|
| 0 | 0 | JTAG | Passive serial/Slave serial FPGA configuration |
| 0 | 1 | JTAG | I2C |
| 1 | 0 | JTAG | SPI for serial flash programming |
| 1 | 1 | JTAG | UART |

*Table 3: FTDI Multiplexer Modes*

### 1.11.1 Passive Serial/Slave Serial Configuration

This mode is used to configure the FPGA logic of the inserted module in passive serial/slave serial mode using Enclustra MCT.

### 1.11.2 SPI for Serial Flash Programming

This mode is used to program the QSPI flash of the inserted module using Enclustra MCT.

### 1.11.3 I2C

The FTDI device can be used as I2C master. It is connected to the System Controller's internal I2C bus.

### 1.11.4 JTAG

The FTDI device can be used as Xilinx compatible JTAG adapter. The EEPROM of the FTDI device must be configured first using the Enclustra MCT tool, otherwise the Xilinx tools will not recognize the FTDI as programming adapter.

### 1.11.5 UART

The UART bus of the module is connected to FTDI port B.

## 1.12 I2C Initialization

An initial configuration of selected I2C devices is performed every time the PWR_OK# signal is changing from inactive to active. The attached module is held in reset during this process. A possible collision on the I2C bus or unsuccessful initialization can be detected in the Error register (address 0x08). This I2C initialization is active when SCMODE0#_VMON_SEL = 1 at powerup (DIP switch CFG A 3).

### 1.12.1 MGT multiplexer Initialization

The configuration depends on the value of the SCMODE1#_PCIE_SEL signal at powerup (DIP switch CFG C 2). Table 4 and 5 show the I2C commands executed for both configuration settings.

**Signal SCMODE1#_PCIE_SEL = 0**

Following configuration is applied:

- Output 0 of clock generator is connected to MGT reference clock 0 of module connector B
- Lane 0 of M.2 connector is connected to MGT lane 0 of module connector B
- Display Port lane 0 of the USB-C connector is connected to MGT lane 1 of module connector B
- USB 3.0 lane of USB-C connector is connected to MGT lane 2 of module connector B
- USB 3.0 lane of USB A connector is connected to MGT lane 3 of module connector B
- PCIe lanes of the edge connector are routed to MGT lanes 4-7 of module connector B
- Reference clock of PCIe edge connector to routed to clock generator input 2
- Clock generator is configured to forward input 2 to output 9 (MGT reference clock 2 of module connector B)

| Step | Device Address | Register Address | Data | Description |
|---|---|---|---|---|
| 1 | 0x74 | 0x0C | 0x0C | Select I2C mux channel 4 to have access to MGT mux 0-3 |
| 2 | 0x30 | 0x01 | 0x80 | Enable mux 0 |
| 3 | 0x30 | 0x02 | 0x02 | Route input 2 to output 1 of mux 0 |
| 4 | 0x30 | 0x03 | 0x01 | Route input 1 to output 2 of mux 0 |
| 5 | 0x30 | 0x04 | 0x10 | Route input 5 to output 3 of mux 0 |
| 6 | 0x30 | 0x05 | 0x08 | Route input 4 to output 4 of mux 0 |
| 7 | 0x30 | 0x06 | 0x80 | Route input 8 to output 5 of mux 0 |
| 8 | 0x30 | 0x08 | 0x1F | Inform mux 0 that output 1, 2, 3, 4 and 5 have changed |
| 9 | 0x32 | 0x01 | 0x80 | Enable mux 1 |
| 10 | 0x32 | 0x03 | 0x01 | Route input 1 to output 2 of mux 1 |
| 11 | 0x32 | 0x04 | 0x10 | Route input 5 to output 3 of mux 1 |
| 12 | 0x32 | 0x05 | 0x08 | Route input 4 to output 4 of mux 1 |
| 13 | 0x32 | 0x06 | 0x80 | Route input 8 to output 5 of mux 1 |
| 14 | 0x32 | 0x08 | 0x1E | Inform mux 1 that output 2, 3, 4 and 5 has changed |
| 15 | 0x34 | 0x01 | 0x80 | Enable mux 2 |
| 16 | 0x34 | 0x02 | 0x02 | Route input 2 to output 1 of mux 2 |
| 17 | 0x34 | 0x03 | 0x01 | Route input 1 to output 2 of mux 2 |

*Continued on next page...*

| | | | | |
|---|---|---|---|---|
| 18 | 0x34 | 0x04 | 0x10 | Route input 5 to output 3 of mux 2 |
| 19 | 0x34 | 0x05 | 0x08 | Route input 4 to output 4 of mux 2 |
| 20 | 0x34 | 0x08 | 0x0F | Inform mux 2 that output 1, 2, 3 and 4 have changed |
| 21 | 0x36 | 0x01 | 0x80 | Enable mux 3 |
| 22 | 0x36 | 0x02 | 0x02 | Route input 2 to output 1 of mux 3 |
| 23 | 0x36 | 0x03 | 0x01 | Route input 1 to output 2 of mux 3 |
| 24 | 0x36 | 0x04 | 0x10 | Route input 5 to output 3 of mux 3 |
| 25 | 0x36 | 0x05 | 0x08 | Route input 4 to output 4 of mux 3 |
| 26 | 0x36 | 0x08 | 0x0F | Inform mux 3 that output 1, 2, 4 and 4 have changed |
| 27 | 0x74 | 0x08 | 0x08 | Select I2C mux channel 0 to have access to the clock generator device |
| 28 | 0x6A | 0x06 | 0x01 | Set clock generator in ready state |
| 29 | 0x6A | 0x24 | 0x01 | Select crystal as input clock source |
| 30 | 0x6A | 0x29 | 0x72 | Configure mux for output 9 to use input 2 |
| 31 | 0x6A | 0x73 | 0x01 | Configure input 2 for differential input |
| 32 | 0x6A | 0xA7 | 0x06 | Configure output 9 as 3.3V fast LVDS |
| 33 | 0x6A | 0xA8 | 0x01 | Set output 9 divider to 1 |
| 34 | 0x6A | 0xB6 | 0x00 | Disable output 0-7 |
| 35 | 0x6A | 0xB7 | 0x02 | Enable output 9 / disable output 8, 10 and 11 |
| 36 | 0x6A | 0xB9 | 0x24 | Disable PLL |
| 37 | 0x6A | 0xBB | 0x2F | Enable output multiplexer for output 9 |
| 38 | 0x6A | 0xBC | 0xFF | Disable output 0-7 |
| 39 | 0x6A | 0xBD | 0x0D | Enable output 9 / disable output 8, 10 and 11 |
| 40 | 0x6A | 0xBF | 0x01 | Configure 18 pF load capatitance for crystal |
| 41 | 0x6A | 0xC0 | 0x30 | Configure 18 pF load capatitance for crystal |
| 42 | 0x6A | 0xC1 | 0x30 | Configure 18 pF load capatitance for crystal |
| 43 | 0x6A | 0x06 | 0x02 | Set clock generator active |

*Table 4: MGT Multiplexer Initialization for M.2, USB and Display Port*

**Signal SCMODE1#_PCIE_SEL = 1**

Following configuration is applied:

- PCIe lanes of the edge connector are routed to MGT lanes 0-3 of module connector B
- Reference clock of PCIe edge connector is routed to MGT reference clock 0 of module connector B

| Step | Device Address | Register Address | Data | Description |
|---|---|---|---|---|
| 1 | 0x74 | 0x0C | 0x0C | Select I2C mux channel 4 to have access to MGT mux 0-3 |
| 2 | 0x30 | 0x01 | 0x80 | Enable mux 0 |
| 3 | 0x30 | 0x02 | 0x01 | Route input 1 to output 1 of mux 0 |
| 4 | 0x30 | 0x04 | 0x08 | Route input 4 to output 3 of mux 0 |
| 5 | 0x30 | 0x06 | 0x40 | Route input 7 to output 5 of mux 0 |
| 6 | 0x30 | 0x08 | 0x15 | Inform mux 0 that output 1, 3 and 5 have changed |
| 7 | 0x32 | 0x01 | 0x80 | Enable mux 1 |
| 8 | 0x32 | 0x02 | 0x01 | Route input 1 to output 1 of mux 1 |
| 9 | 0x32 | 0x04 | 0x08 | Route input 4 to output 3 of mux 1 |
| 10 | 0x32 | 0x06 | 0x40 | Route input 7 to output 5 of mux 1 |
| 11 | 0x32 | 0x08 | 0x15 | Inform mux 1 that output 1, 3 and 5 have changed |
| 12 | 0x34 | 0x01 | 0x80 | Enable mux 2 |
| 13 | 0x34 | 0x02 | 0x01 | Route input 1 to output 1 of mux 2 |
| 14 | 0x34 | 0x04 | 0x08 | Route input 4 to output 3 of mux 2 |
| 15 | 0x34 | 0x08 | 0x15 | Inform mux 2 that output 1 and 3 have changed |
| 16 | 0x36 | 0x01 | 0x80 | Enable mux 3 |
| 17 | 0x36 | 0x02 | 0x01 | Route input 1 to output 1 of mux 3 |
| 18 | 0x36 | 0x04 | 0x08 | Route input 4 to output 3 of mux 3 |
| 19 | 0x36 | 0x08 | 0x05 | Inform mux 3 that output 1 and 3 have changed |
| 20 | 0x74 | 0x08 | 0x08 | Select I2C mux channel 0 |

*Table 5: MGT Multiplexer Initialization for PCIe*

## 1.13 Pin Multiplexer

Following pins can be multiplexed internally to switch between different functions:

- The PCIe EIO SPI pins can be connected to the SC0 to SC3 signals by configuring the EioGpioMux0 (address 0x14) and EioGpioMux1 (address 0x15) register. By default the SPI multiplexer is disabled and the pins are set to high impedance.
- The SIO0_PERST# pin can be configured to output the PCIE_PERST# or Interrupt signal by Gpio2Mux0 (address 0x23) and Gpio2Mux1 (address 0x24) register. By default the SIO0_PERST# pin outputs the value of PCIE_PERST#.
- The SIO1 pin can be configured to output the Interrupt signal by Gpio2Mux0 register (address 0x23). By default the SIO1 is in GPIO mode set to high impedance.
- The SIO2_SDCD# pin can be configured to output the SDCARD_CD# signal by Gpio2Mux0 register (address 0x23). By default the SIO2_SDCD# pin outputs the value of SDCARD_CD#.

## 1.14 USB

Host or device mode is selected by USB_MODE0 pin. By default the signal is set by DIP switch CFG B 1. The default value can be overridden by UsbGpioEn (address 0x19) and UsbGpioWrite (address 0x1B) registers.

In host mode (pin USB_MODE0 is 0): PWR_USBA_SRC_EN is enabled (1) when USBMOD_CPEN is 1 to enable USB 5V VBUS output.

In device mode (pin USB_MODE0 is 1): PWR_USBA_SRC_EN is always enabled (1) to route 5V to the USB PHY for device detection.

## 1.15 Boot Mode

By default the BOOT_MODE0 and BOOT_MODE1 pins are configured to high impedance and the value of both signals are set by DIP switches CFG A 1 and CFG A 2. The default value can be overridden by BootConfigEn (address 0x0E) and BootConfigWrite (address 0x10) registers.

## 1.16 Version

The build version is stored in the following four registers: VersionYearMsb, VersionYearLsb, VersionMonth, VersionDay (address 0x2B to 0x2E).

# 2 I2C Register Bank

## 2.1 Register Field Types

| Field Type | Description |
|---|---|
| R | Read only. Writing to this bit has no effect. |
| R0 | Read only (always reads as zero). Writing to this bit has no effect. |
| R1 | Read only (always reads as one). Writing to this bit has no effect. |
| RW | Standard read/write bit. This bit can be read or written. |
| RW0 | Read only. Writing any value to this bit clears it to zero. |
| W | Write only. Reading is possible, but the return value must be ignored. |

*Table 6: Register Field Types*

## 2.2 Register Overview

| Address | Name | Description |
|---|---|---|
| 0x00 | ScConfig | System Controller configuration |
| 0x01 | ScStatus | System Controller status |
| 0x02 | BoardPowerControl | Power control of base board |
| 0x03 | BoardPowerStatus | Power status of base board |
| 0x04 | BoardPowerButtonTime | Power button press time |
| 0x05 | ModulePowerControl | Power control for attached module |
| 0x06 | ModulePowerStatus | Power status of attached module |
| 0x07 | Debug | Debug register |
| 0x08 | Error | Error register |
| 0x0A | Action | Action unit configuration |
| 0x0B | InterruptStatus | Interrupt status |
| 0x0C | InterruptEn | Interrupt enable |
| 0x0D | InterruptEdge | Interrupt edge selection |
| 0x0E | BootConfigEn | Boot config pin tristate select |
| 0x0F | BootConfigRead | Boot config pin read value |
| 0x10 | BootConfigWrite | Boot config write value |
| 0x11 | MiscGpioEn | Miscellaneous GPIO tristate select |
| 0x12 | MiscGpioRead | Miscellaneous GPIO read value |
| 0x13 | MiscGpioWrite | Miscellaneous GPIO write value |
| 0x14 | EioGpioMux0 | EIO GPIO multiplexer select bit 0 |
| 0x15 | EioGpioMux1 | EIO GPIO multiplexer select bit 1 |
| 0x16 | EioGpioEn | EIO GPIO tristate select |
| 0x17 | EioGpioRead | EIO GPIO read value |

*Continued on next page...*

| | | |
|---|---|---|
| 0x18 | EioGpioWrite | EIO GPIO write value |
| 0x19 | UsbGpioEn | USB GPIO tristate select |
| 0x1A | UsbGpioRead | USB GPIO read value |
| 0x1B | UsbGpioWrite | USB GPIO write value |
| 0x1C | Gpo | GPO write value |
| 0x1D | Gpio0En | GPIO0 tristate select |
| 0x1E | Gpio0Read | GPIO0 read value |
| 0x1F | Gpio0Write | GPIO0 write value |
| 0x20 | Gpio1En | GPIO1 tristate select |
| 0x21 | Gpio1Read | GPIO1 read value |
| 0x22 | Gpio1Write | GPIO1 write value |
| 0x23 | Gpio2Mux0 | GPIO2 multiplexer select bit 0 |
| 0x24 | Gpio2Mux1 | GPIO2 multiplexer select bit 1 |
| 0x25 | Gpio2En | GPIO2 tristate select |
| 0x26 | Gpio2Read | GPIO2 read value |
| 0x27 | Gpio2Write | GPIO2 write value |
| 0x28 | HwId | Hardware ID of base board |
| 0x2B | VersionYearMsb | System Controller build year MSB |
| 0x2C | VersionYearLsb | System Controller build year LSB |
| 0x2D | VersionMonth | System Controller build month |
| 0x2E | VersionDay | System Controller build day |

*Table 7: I2C Register Bank Overview*

## 2.3 Detailed Register Description

### 2.3.1 System Controller Configuration Register (0x00)

General System Controller configuration.

| Bit | Size | Field Name | Type | Reset | Description |
|---|---|---|---|---|---|
| 0 | 1 | CpuLedOn | RW | 0x00 | Writing 1 to this register enables the LED connected to pin SC_LED4# |
| 1 | 1 | UartEn | RW | 0x01 | Writing 1 to this register enables the UART port on pin UART_RX and UART_TX. |
| 2 | 1 | ExtUartEn | RW | 0x00 | Not used on this product |
| 7:3 | 5 | Unused | R0 | 0x00 | - |

*Table 8: ScConfig Register (0x00)*

### 2.3.2 System Controller Status Register (0x01)

The configuration signals which are read and stored at startup can be seen in this register.

| Bit | Size | Field Name | Type | Reset | Description |
|---|---|---|---|---|---|
| 0 | 1 | ScMode0 | R | 0x00 | Inverted value of pin SCMODE0#_VMON_SEL at startup |
| 1 | 1 | ScMode1 | R | 0x00 | Inverted value of pin SCMODE1#_PCIE_SEL at startup |
| 2 | 1 | BootMode1 | R | 0x00 | Value of pin USB_SEL at startup |
| 7:3 | 5 | Unused | R0 | 0x00 | - |

*Table 9: ScStatus Register (0x01)*

### 2.3.3 Board Power Control Register (0x02)

This register controls power of the base board. Writing to this register triggers to enable or disable the board power.

| Bit | Size | Field Name | Type | Reset | Description |
|---|---|---|---|---|---|
| 0 | 1 | PwrDis | W | 0x00 | Writing 1 to this bit disables the power of the base board |
| 1 | 1 | PwrEn | W | 0x00 | Writing 1 to this bit enables the power of the base board |
| 7:2 | 6 | Unused | R0 | 0x00 | - |

*Table 10: BoardPowerControl Register (0x02)*

### 2.3.4 Board Power Status Register (0x03)

Base board power status register.

| Bit | Size | Field Name | Type | Reset | Description |
|---|---|---|---|---|---|
| 0 | 1 | ButtonState | R | 0x00 | Read value is 1 if the power button is pressed |
| 1 | 1 | PwrCtrl | R | 0x00 | Read value is 1 if the board power is enabled by the board power control FSM (see section 1.3) |
| 7:2 | 6 | Unused | R0 | 0x00 | - |

*Table 11: BoardPowerStatus Register (0x03)*

### 2.3.5 Board Power-Button Time Register (0x04)

Configures the time the power button needs to be pressed until base board power is turned off or an interrupt is generated. The value is set to 3 seconds by default.

| Bit | Size | Field Name | Type | Reset | Description |
|---|---|---|---|---|---|
| 7:0 | 8 | ButtonTime | RW | 0x3C | Value*50ms = button press time |

*Table 12: BoardPowerButtonTime Register (0x04)*

### 2.3.6 Module Power Control Register (0x05)

This register is used to control power for the attached module.

| Bit | Size | Field Name | Type | Reset | Description |
|---|---|---|---|---|---|
| 0 | 1 | ForceSepicEn | RW | 0x00 | Not used on this product |
| 1 | 1 | UsbCPwrFsmEn | RW | 0x00 | Not used on this product |
| 2 | 1 | DisableModulePower | RW | 0x00 | A value of 1 disables the power to the module |
| 7:3 | 5 | Unused | R0 | 0x00 | - |

*Table 13: ModulePowerControl Register (0x05)*

### 2.3.7 Module Power Status Register (0x06)

Module power status register.

| Bit | Size | Field Name | Type | Reset | Description |
|---|---|---|---|---|---|
| 0 | 1 | PwrEn | R | 0x00 | Read value is 1 if module power is enabled (PWR_EN = 1) |
| 1 | 1 | PwrOk | R | 0x00 | Read value is 1 if module power is ok (PWR_OK# = 0) |
| 2 | 1 | SepicEnabled | R | 0x00 | Always 0 |
| 3 | 1 | UsbC500mA | R | 0x00 | Always 0 |
| 4 | 1 | UsbC1500mA | R | 0x00 | Always 0 |
| 5 | 1 | UsbC3000mA | R | 0x00 | Always 0 |
| 7:6 | 2 | Unused | R0 | 0x00 | - |

*Table 14: ModulePowerStatus Register (0x06)*

### 2.3.8 Debug Register (0x07)

This register is not used internally. It can be used for read/write access test. The written value is stored and returned on read.

| Bit | Size | Field Name | Type | Reset | Description |
|---|---|---|---|---|---|
| 7:0 | 8 | Debug | RW | 0x00 | Debug |

*Table 15: Debug Register (0x07)*

### 2.3.9 Error Register (0x08)

Error register, contains read only error flags.

| Bit | Size | Field Name | Type | Reset | Description |
|---|---|---|---|---|---|
| 0 | 1 | ClockGenError | R | 0x00 | Always 0 |
| 1 | 1 | MgtMux0Error | R | 0x00 | Always 0 |
| 2 | 1 | ClockGenRetry | R | 0x00 | Always 0 |
| 3 | 1 | MgtMux0Retry | R | 0x00 | Always 0 |
| 4 | 1 | MgtMux1Error | R | 0x00 | MGT multiplexer initialization error |
| 5 | 1 | MgtMux1Retry | R | 0x00 | MGT multiplexer I2C acknowledge was missing |
| 7:6 | 2 | Unused | R0 | 0x00 | - |

*Table 16: Error Register (0x07)*

### 2.3.10 Action Register (0x0A)

Control register for action unit. Writing 1 to these bits triggers immediately an action for 10 milliseconds. Read returns the last written value.

| Bit | Size | Field Name | Type | Reset | Description |
|---|---|---|---|---|---|
| 0 | 1 | FtdiReset | RW | 0x00 | Writing 1 to this bit resets the FTDI on the base board |
| 1 | 1 | PwrDis | RW | 0x00 | Writing 1 to this bit disables the module power for 10ms |
| 2 | 1 | PorLoad | RW | 0x00 | Writing 1 to this bit resets the module by POR#_LOAD# pin |
| 3 | 1 | SrstRdy | RW | 0x00 | Writing 1 to this bit resets the module by SRST#_RDY# pin |
| 7:4 | 4 | Unused | R0 | 0x00 | - |

*Table 17: Action Register (0x0A)*

### 2.3.11 Interrupt Status Register (0x0B)

When an interrupt occurs, the corresponding flag in this register is set. Writing any value to this register clears all flags.

| Bit | Size | Field Name | Type | Reset | Description |
|---|---|---|---|---|---|
| 0 | 1 | PowerButton | RW0 | 0x00 | Set when a power button interrupt occurred |
| 1 | 1 | VBusDetect | RW0 | 0x00 | Set when an USBC_UFP interrupt occurred |
| 2 | 1 | PciePerstN | RW0 | 0x00 | Set when a PCIE_PERST# interrupt occurred |
| 3 | 1 | PcieWakeN | RW0 | 0x00 | Set when a PCIE_WAKE# interrupt occurred |
| 4 | 1 | SdCardCdN | RW0 | 0x00 | Set when a SDCARD_CD# interrupt occurred |
| 5 | 1 | Gpio1 | RW0 | 0x00 | Set when a M2_PERST# interrupt occurred |
| 6 | 1 | Gpio2 | RW0 | 0x00 | Set when a FF_MODPRS# interrupt occurred |
| 7 | 1 | Unused | R0 | 0x00 | - |

*Table 18: InterruptStatus Register (0x0B)*

### 2.3.12 Interrupt Enable Register (0x0C)

Interrupt enable register. Writing 1 to these bits enables interrupt generation for the chosen signal.

| Bit | Size | Field Name | Type | Reset | Description |
|---|---|---|---|---|---|
| 0 | 1 | PowerButton | RW | 0x00 | Enables interrupt when power button is pressed longer than configured time |
| 1 | 1 | VBusDetect | RW | 0x00 | Enables interrupt when signal on pin USBC_UFP changes |
| 2 | 1 | PciePerstN | RW | 0x00 | Enables interrupt when signal on pin PCIE_PERST# changes |
| 3 | 1 | PcieWakeN | RW | 0x00 | Enables interrupt when signal on pin PCIE_WAKE# changes |
| 4 | 1 | SdCardCdN | RW | 0x00 | Enables interrupt when signal on pin SDCARD_CD# changes |
| 5 | 1 | Gpio1 | RW | 0x00 | Enables interrupt when signal on pin M2_PERST# changes |
| 6 | 1 | Gpio2 | RW | 0x00 | Enables interrupt when signal on pin FF_MODPRS# changes |
| 7 | 1 | Unused | R0 | 0x00 | - |

*Table 19: InterruptEn Register (0x0C)*

### 2.3.13 Interrupt Edge Select Register (0x0D)

Selects the edge that generates an interrupt. 1 selects rising edge, 0 selects falling edge.

| Bit | Size | Field Name | Type | Reset | Description |
|---|---|---|---|---|---|
| 0 | 1 | Unused | R0 | 0x00 | - |
| 1 | 1 | VBusDetect | RW | 0x00 | Selects the active edge to generate a USBC_UFP interrupt |
| 2 | 1 | PciePerstN | RW | 0x00 | Selects the active edge to generate a PCIE_PERST# interrupt |
| 3 | 1 | PcieWakeN | RW | 0x00 | Selects the active edge to generate a PCIE_WAKE# interrupt |
| 4 | 1 | SdCardCdN | RW | 0x00 | Selects the active edge to generate a SDCARD_CD# interrupt |
| 5 | 1 | Gpio1 | RW | 0x00 | Selects the active edge to generate a M2_PERST# interrupt |
| 6 | 1 | Gpio2 | RW | 0x00 | Selects the active edge to generate a FF_MODPRS# interrupt |
| 7 | 1 | Unused | R0 | 0x00 | - |

*Table 20: InterruptEdge Register (0x0D)*

### 2.3.14 Boot Configuration Enable Register (0x0E)

Writing 1 to these bits allows to override the signal value.

| Bit | Size | Field Name | Type | Reset | Description |
|---|---|---|---|---|---|
| 0 | 1 | BootMode1 | RW | 0x00 | Pin: BOOT_MODE1<br>0 = High impedance<br>1 = Output value is set by BootConfigWrite register (0x10) bit 0 |
| 1 | 1 | BootMode0 | RW | 0x00 | Pin: BOOT_MODE0<br>0 = High impedance<br>1 = Drive low |
| 2 | 1 | PorLoadN | RW | 0x00 | Pin: POR#_LOAD#<br>0 = High impedance<br>1 = Drive low |
| 3 | 1 | SrstRdyN | RW | 0x00 | Pin: SRST#_RDY#<br>0 = High impedance<br>1 = Drive low |
| 7:4 | 4 | Unused | R0 | 0x00 | - |

*Table 21: BootConfigEn Register (0x0E)*

### 2.3.15 Boot Configuration Read Register (0x0F)

This register contains the read values of the boot configuration pins.

| Bit | Size | Field Name | Type | Reset | Description |
|---|---|---|---|---|---|
| 0 | 1 | BootMode1 | R | 0x00 | Read value of pin BOOT_MODE1 |
| 1 | 1 | BootMode0 | R | 0x00 | Read value of pin BOOT_MODE0 |
| 2 | 1 | PorLoadN | R | 0x00 | Read value of pin POR#_LOAD# |
| 3 | 1 | SrstRdyN | R | 0x00 | Read value of pin SRST#_RDY# |
| 4 | 1 | FpgaDone | R | 0x00 | Read value of pin FPGA_DONE |
| 5 | 1 | SdCardCdN | R | 0x00 | Read value of pin SDCARD_CD# |
| 7:6 | 2 | Unused | R0 | 0x00 | - |

*Table 22: BootConfigRead Register (0x0F)*

### 2.3.16 Boot Configuration Write Register (0x10)

If the corresponding bit in BootConfigEn register (0x0E) is set, this register allows to drive the pin low or high depending on the selected value.

| Bit | Size | Field Name | Type | Reset | Description |
|---|---|---|---|---|---|
| 0 | 1 | BootMode1 | RW | 0x00 | Output value of pin BOOT_MODE1 when bit 0 in BootConfigEn register (0x0E) is set |
| 7:1 | 7 | Unused | R0 | 0x00 | - |

*Table 23: BootConfigWrite Register (0x10)*

### 2.3.17 Miscellaneous GPIO Enable Register (0x11)

Setting these bits to 1 allows to override the pin values.

| Bit | Size | Field Name | Type | Reset | Description |
|---|---|---|---|---|---|
| 0 | 1 | PciePerstN | RW | 0x00 | Pin: PCIE_PERST#<br>0 = High impedance<br>1 = Output value is set by MiscGpioWrite register (0x13) bit 0<br>Note that PCIE_PERST# is set to high impedance if Gpio2Mux0 register (0x23) bit 0 is set, independent of the value of this bit. |
| 1 | 1 | PcieWakeN | RW | 0x00 | Pin: PCIE_WAKE#<br>0 = High impedance<br>1 = Output value is set by MiscGpioWrite register (0x13) bit 1 |
| 2 | 1 | ScMode0 | RW | 0x00 | Pin: SCMODE0#_VMON_SEL<br>0 = High impedance<br>1 = Output value is set by MiscGpioWrite register (0x13) bit 2 |
| 3 | 1 | ScMode1 | RW | 0x00 | Pin: SCMODE1#_PCIE_SEL<br>0 = High impedance<br>1 = Output value is set by MiscGpioWrite register (0x13) bit 3 |
| 4 | 1 | FtdiReset | RW | 0x00 | Pin: FTDI_RESET#<br>0 = High impedance<br>1 = Output value is 0 |
| 5 | 1 | UartTxExt | RW | 0x00 | Pin: M2_PEDET<br>0 = High impedance<br>1 = Output value is set by MiscGpioWrite register (0x13) bit 5 |
| 6 | 1 | UartRxExt | RW | 0x00 | Pin: FF_MODSEL#<br>0 = High impedance<br>1 = Output value is set by MiscGpioWrite register (0x13) bit 6 |
| 7 | 1 | Unused | R0 | 0x00 | - |

*Table 24: MiscGpioEn Register (0x11)*

### 2.3.18 Miscellaneous GPIO Read Register (0x12)

This register contains the read values of the GPIO pins.

| Bit | Size | Field Name | Type | Reset | Description |
|---|---|---|---|---|---|
| 0 | 1 | PciePerstN | R | 0x00 | Read value of pin PCIE_PERST# |
| 1 | 1 | PcieWakeN | R | 0x00 | Read value of pin PCIE_WAKE# |
| 2 | 1 | ScMode0 | R | 0x00 | Read value of pin SCMODE0#_VMON_SEL |
| 3 | 1 | ScMode1 | R | 0x00 | Read value of pin SCMODE1#_PCIE_SEL |
| 4 | 1 | FtdiReset | R | 0x00 | Read value of pin FTDI_RESET# |
| 5 | 1 | UartTxExt | R | 0x00 | Read value of pin M2_PEDET |
| 6 | 1 | UartRxExt | R | 0x00 | Read value of pin FF_MODSEL# |
| 7 | 1 | Unused | R0 | 0x00 | - |

*Table 25: MiscGpioRead Register (0x12)*

### 2.3.19 Miscellaneous GPIO Write Register (0x13)

If the corresponding bit in MiscGpioEn register (0x11) is set, this register allows to drive the GPIO pin low or high depending on the selected value.

| Bit | Size | Field Name | Type | Reset | Description |
|---|---|---|---|---|---|
| 0 | 1 | PciePerstN | RW | 0x00 | Output value of pin PCIE_PERST# when bit 0 in MiscGpioEn register (0x11) is set and bit 0 of Gpio2Mux0 register (0x23) is cleared |
| 1 | 1 | PcieWakeN | RW | 0x00 | Output value of pin PCIE_WAKE# when bit 1 in MiscGpioEn register (0x11) is set |
| 2 | 1 | ScMode0 | RW | 0x00 | Output value of pin SCMODE0#_VMON_SEL when bit 2 in MiscGpioEn register (0x11) is set |
| 3 | 1 | ScMode1 | RW | 0x00 | Output value of pin SCMODE1#_PCIE_SEL when bit 3 in MiscGpioEn register (0x11) is set |
| 4 | 1 | Unused | R0 | 0x00 | - |
| 5 | 1 | UartTxExt | RW | 0x00 | Output value of pin FF_MODSEL# when bit 5 in MiscGpioEn register (0x11) is set |
| 6 | 1 | UartRxExt | RW | 0x00 | Output value of pin FF_MODSEL# when bit 6 in MiscGpioEn register (0x11) is set |
| 7 | 1 | Unused | R0 | 0x00 | - |

*Table 26: MiscGpioWrite Register (0x13)*

### 2.3.20 EIO GPIO Multiplexer 0 Register (0x14)

This register is used together with EioGpioMux1 register (0x15) to control the EIO SPI multiplexer. It allows to route the EIO SPI signals to the module connector.

Multiplexer select bit 0 = 0 and bit 1 = 0: EIO SPI pin is used as GPIO
Multiplexer select bit 0 = 0 and bit 1 = 1: EIO SPI pin is connected to module (EIO is SPI slave)
Multiplexer select bit 0 = 1: EIO SPI pin is connected to module (EIO is SPI master)

| Bit | Size | Field Name | Type | Reset | Description | | |
|---|---|---|---|---|---|---|---|
| 0 | 1 | Unused | R0 | 0x00 | - | | |
| 1 | 1 | EioClkMux[0] | RW | 0x00 | Multiplexer select bit 0 for pin EIO0_CLK | | |
| | | | | | **Bit 1** | **Bit 0** | **Description** |
| | | | | | 0 | 0 | GPIO |
| | | | | | 0 | 1 | Connection EIO0_CLK → LED0# |
| | | | | | 1 | 0 | Connection EIO0_CLK ← LED0# |
| | | | | | 1 | 1 | Connection EIO0_CLK → LED0# |
| 2 | 1 | EioMosiMux[0] | RW | 0x00 | Multiplexer select bit 0 for pin EIO2_MOSI | | |
| | | | | | **Bit 1** | **Bit 0** | **Description** |
| | | | | | 0 | 0 | GPIO |
| | | | | | 0 | 1 | Connection EIO2_MOSI → LED2# |
| | | | | | 1 | 0 | Connection EIO2_MOSI ← LED2# |
| | | | | | 1 | 1 | Connection EIO2_MOSI → LED2# |
| 3 | 1 | EioMisoMux[0] | RW | 0x00 | Multiplexer select bit 0 for pin EIO1_MISO | | |
| | | | | | **Bit 1** | **Bit 0** | **Description** |
| | | | | | 0 | 0 | GPIO |
| | | | | | 0 | 1 | Connection LED3# → EIO1_MISO |
| | | | | | 1 | 0 | Connection LED3# ← EIO1_MISO |
| | | | | | 1 | 1 | Connection LED3# → EIO1_MISO |
| 4 | 1 | EioCsNMux[0] | RW | 0x00 | Multiplexer select bit 0 for pin EIO3_CS# | | |
| | | | | | **Bit 1** | **Bit 0** | **Description** |
| | | | | | 0 | 0 | GPIO |
| | | | | | 0 | 1 | Connection EIO3_CS# → LED1# |
| | | | | | 1 | 0 | Connection EIO3_CS# ← LED1# |
| | | | | | 1 | 1 | Connection EIO3_CS# → LED1# |
| 7:5 | 3 | Unused | R0 | 0x00 | - | | |

*Table 27: EioGpioMux0 Register (0x14)*

### 2.3.21 EIO GPIO Multiplexer 1 Register (0x15)

This register is used together with EioGpioMux0 register (0x14) to control the EIO SPI multiplexer. It allows to route the EIO SPI signals to the module connector.

Multiplexer select bit 0 = 0 and bit 1 = 0: EIO SPI pin is used as GPIO
Multiplexer select bit 0 = 0 and bit 1 = 1: EIO SPI pin is connected to module (EIO is SPI slave)
Multiplexer select bit 0 = 1: EIO SPI pin is connected to module (EIO is SPI master)

| Bit | Size | Field Name | Type | Reset | Description | | |
|---|---|---|---|---|---|---|---|
| 0 | 1 | Unused | R0 | 0x00 | - | | |
| 1 | 1 | EioClkMux[1] | RW | 0x00 | Multiplexer select bit 1 for pin EIO0_CLK | | |
| | | | | | **Bit 1** | **Bit 0** | **Description** |
| | | | | | 0 | 0 | GPIO |
| | | | | | 0 | 1 | Connection EIO0_CLK → LED0# |
| | | | | | 1 | 0 | Connection EIO0_CLK ← LED0# |
| | | | | | 1 | 1 | Connection EIO0_CLK → LED0# |
| 2 | 1 | EioMosiMux[1] | RW | 0x00 | Multiplexer select bit 1 for pin EIO2_MOSI | | |
| | | | | | **Bit 1** | **Bit 0** | **Description** |
| | | | | | 0 | 0 | GPIO |
| | | | | | 0 | 1 | Connection EIO2_MOSI → LED2# |
| | | | | | 1 | 0 | Connection EIO2_MOSI ← LED2# |
| | | | | | 1 | 1 | Connection EIO2_MOSI → LED2# |
| 3 | 1 | EioMisoMux[1] | RW | 0x00 | Multiplexer select bit 1 for pin EIO1_MISO | | |
| | | | | | **Bit 1** | **Bit 0** | **Description** |
| | | | | | 0 | 0 | GPIO |
| | | | | | 0 | 1 | Connection LED3# → EIO1_MISO |
| | | | | | 1 | 0 | Connection LED3# ← EIO1_MISO |
| | | | | | 1 | 1 | Connection LED3# → EIO1_MISO |
| 4 | 1 | EioCsNMux[1] | RW | 0x00 | Multiplexer select bit 1 for pin EIO3_CS# | | |
| | | | | | **Bit 1** | **Bit 0** | **Description** |
| | | | | | 0 | 0 | GPIO |
| | | | | | 0 | 1 | Connection EIO3_CS# → LED1# |
| | | | | | 1 | 0 | Connection EIO3_CS# ← LED1# |
| | | | | | 1 | 1 | Connection EIO3_CS# → LED1# |
| 7:5 | 3 | Unused | R0 | 0x00 | - | | |

*Table 28: EioGpioMux1 Register (0x15)*

### 2.3.22 EIO GPIO Enable Register (0x16)

Setting these bits to 1 allows to override the pin values if the EIO GPIO multiplexer (register 0x14/0x15) is configured to select GPIO functionality.

| Bit | Size | Field Name | Type | Reset | Description |
|---|---|---|---|---|---|
| 0 | 1 | EioEnN | RW | 0x00 | Pin: EIO_PWR_EN#<br>0 = High impedance<br>1 = Output value is 0 |
| 1 | 1 | EioClk | RW | 0x00 | Pin: EIO0_CLK<br>0 = High impedance<br>1 = Output value is set by EioGpioWrite register (0x18) bit 1 |
| 2 | 1 | EioMosi | RW | 0x00 | Pin: EIO2_MOSI<br>0 = High impedance<br>1 = Output value is set by EioGpioWrite register (0x18) bit 2 |
| 3 | 1 | EioMiso | RW | 0x00 | Pin: EIO1_MISO<br>0 = High impedance<br>1 = Output value is set by EioGpioWrite register (0x18) bit 3 |
| 4 | 1 | EioCsN | RW | 0x00 | Pin: EIO3_CS#<br>0 = High impedance<br>1 = Output value is set by EioGpioWrite register (0x18) bit 4 |
| 5 | 1 | EioI2cScl | RW | 0x00 | Pin: PWR_USBC_SINK_EN<br>0 = High impedance<br>1 = Output value is set by EioGpioWrite register (0x18) bit 5 |
| 6 | 1 | EioI2cSda | RW | 0x00 | Pin: USBCC_GPIO14<br>0 = High impedance<br>1 = Output value is set by EioGpioWrite register (0x18) bit 6 |
| 7 | 1 | Unused | R0 | 0x00 | - |

*Table 29: EioGpioEn Register (0x16)*

### 2.3.23 EIO GPIO Read Register (0x17)

This register contains the read values of the GPIO pins.

| Bit | Size | Field Name | Type | Reset | Description |
|---|---|---|---|---|---|
| 0 | 1 | EioEnN | R | 0x00 | Read value of pin EIO_PWR_EN# |
| 1 | 1 | EioClk | R | 0x00 | Read value of pin EIO0_CLK |
| 2 | 1 | EioMosi | R | 0x00 | Read value of pin EIO2_MOSI |
| 3 | 1 | EioMiso | R | 0x00 | Read value of pin EIO1_MISO |
| 4 | 1 | EioCsN | R | 0x00 | Read value of pin EIO3_CS# |
| 5 | 1 | EioI2cScl | R | 0x00 | Read value of pin PWR_USBC_SINK_EN |
| 6 | 1 | EioI2cSda | R | 0x00 | Read value of pin USBCC_GPIO14 |
| 7 | 1 | Unused | R0 | 0x00 | - |

*Table 30: EioGpioRead Register (0x17)*

### 2.3.24 EIO GPIO Write Register (0x18)

If the corresponding bit in EioGpioEn register (0x16) is set and the EIO GPIO Multiplexer (register 0x14/0x15) is configured to select GPIO functionality, this register allows to drive the GPIO pin low or high depending on the selected value.

| Bit | Size | Field Name | Type | Reset | Description |
|---|---|---|---|---|---|
| 0 | 1 | EioEnN | R0 | 0x00 | - |
| 1 | 1 | EioClk | RW | 0x00 | Output value of pin EIO0_CLK when bit 1 in EioGpioEn register (0x16) is set |
| 2 | 1 | EioMosi | RW | 0x00 | Output value of pin EIO2_MOSI when bit 2 in EioGpioEn register (0x16) is set |
| 3 | 1 | EioMiso | RW | 0x00 | Output value of pin EIO1_MISO when bit 3 in EioGpioEn register (0x16) is set |
| 4 | 1 | EioCsN | RW | 0x00 | Output value of pin EIO3_CS# when bit 4 in EioGpioEn register (0x16) is set |
| 5 | 1 | EioI2cScl | RW | 0x00 | Output value of pin PWR_USBC_SINK_EN when bit 5 in EioGpioEn register (0x16) is set |
| 6 | 1 | EioI2cSda | RW | 0x00 | Output value of pin USBCC_GPIO14 when bit 6 in EioGpioEn register (0x16) is set |
| 7 | 1 | Unused | R0 | 0x00 | - |

*Table 31: EioGpioWrite Register (0x18)*

### 2.3.25 USB GPIO Enable Register (0x19)

Setting these bits to 1 allows to override the pin values.

| Bit | Size | Field Name | Type | Reset | Description |
|---|---|---|---|---|---|
| 0 | 1 | UsbSel | RW | 0x00 | Pin: USB_SEL<br>0 = High impedance<br>1 = Output value is set by UsbGpioWrite register (0x1B) bit 0 |
| 1 | 1 | UsbId | RW | 0x00 | Pin: USB_MODE0<br>0 = High impedance<br>1 = Output value is set by UsbGpioWrite register (0x1B) bit 1 |
| 2 | 1 | UsbMode | RW | 0x00 | Pin: USB_MODE1<br>0 = High impedance<br>1 = Output value is set by UsbGpioWrite register (0x1B) bit 2 |
| 3 | 1 | UsbVbusDetect | RW | 0x00 | Pin: USBC_UFP<br>0 = High impedance<br>1 = Output value is set by MiscGpioWrite register (0x1B) bit 3 |
| 7:4 | 4 | Unused | R0 | 0x00 | - |

*Table 32: UsbGpioEn Register (0x19)*

### 2.3.26 USB GPIO Read Register (0x1A)

This register contains the read values of the GPIO pins.

| Bit | Size | Field Name | Type | Reset | Description |
|---|---|---|---|---|---|
| 0 | 1 | UsbSel | R | 0x00 | Read value of pin USB_SEL |
| 1 | 1 | UsbId | R | 0x00 | Read value of pin USB_MODE0 |
| 2 | 1 | UsbMode | R | 0x00 | Read value of pin USB_MODE1 |
| 3 | 1 | UsbVbusDetect | R | 0x00 | Read value of pin USBC_UFP |
| 4 | 1 | UsbModCpEN | R | 0x00 | Read value of pin USBMOD_CPEN |
| 7:5 | 3 | Unused | R0 | 0x00 | - |

*Table 33: UsbGpioRead Register (0x1A)*

### 2.3.27 USB GPIO Write Register (0x1B)

If the corresponding bit in UsbGpioEn register (0x19) is set, this register allows to drive the GPIO pin low or high depending on the selected value.

| Bit | Size | Field Name | Type | Reset | Description |
|---|---|---|---|---|---|
| 0 | 1 | UsbSel | RW | 0x00 | Output value of pin USB_SEL when bit 0 in UsbGpioEn register (0x19) is set |
| 1 | 1 | UsbId | RW | 0x00 | Output value of pin USB_MODE0 when bit 1 in UsbGpioEn register (0x19) is set |
| 2 | 1 | UsbMode | RW | 0x00 | Output value of pin USB_MODE1 when bit 2 in UsbGpioEn register (0x19) is set |
| 3 | 1 | UsbVbusDetect | RW | 0x00 | Output value of pin USBC_UFP when bit 3 in UsbGpioEn register (0x19) is set |
| 7:4 | 5 | Unused | R0 | 0x00 | - |

*Table 34: UsbGpioWrite Register (0x1B)*

### 2.3.28 GPO Register (0x1C)

This register allows to drive the GPO pin low or high depending on the selected value.

| Bit | Size | Field Name | Type | Reset | Description |
|---|---|---|---|---|---|
| 0 | 1 | GpoUsbC | RW | 0x00 | Not used on this product |
| 1 | 1 | GpoClkSel | RW | 0x00 | Output value of pin CLK_SEL_PE1_R1# |
| 2 | 1 | Gpo0 | RW | 0x01 | Output value of pin SC_LED5# |
| 3 | 1 | Gpo1 | RW | 0x01 | Output value of pin RST_AUX# |
| 7:4 | 4 | Unused | R0 | 0x00 | - |

*Table 35: Gpo Register (0x1C)*

### 2.3.29 GPIO 0 Enable Register (0x1D)

Setting these bits to 1 allows to override the pin values.

| Bit | Size | Field Name | Type | Reset | Description |
|---|---|---|---|---|---|
| 0 | 1 | Gpio0Sc0 | RW | 0x00 | Pin: LED0#<br>0 = High impedance<br>1 = Output value is set by Gpio0Write register (0x1F) bit 0<br>Note that the GPIO functionality of pin LED0# is disabled if bit 1 of EioGpioMuxZero register (0x14) or EioGpioMuxOne register (0x15) is set. |
| 1 | 1 | Gpio0Sc1 | RW | 0x00 | Pin: LED1#<br>0 = High impedance<br>1 = Output value is set by Gpio0Write register (0x1F) bit 1<br>Note that the GPIO functionality of pin LED1# is disabled if bit 4 of EioGpioMuxZero register (0x14) or EioGpioMuxOne register (0x15) is set. |
| 2 | 1 | Gpio0Sc2 | RW | 0x00 | Pin: LED2#<br>0 = High impedance<br>1 = Output value is set by Gpio0Write register (0x1F) bit 2<br>Note that the GPIO functionality of pin LED2# is disabled if bit 2 of EioGpioMuxZero register (0x14) or EioGpioMuxOne register (0x15) is set. |
| 3 | 1 | Gpio0Sc3 | RW | 0x00 | Pin: LED3#<br>0 = High impedance<br>1 = Output value is set by Gpio0Write register (0x1F) bit 3<br>Note that the GPIO functionality of pin LED3# is disabled if bit 3 of EioGpioMuxZero register (0x14) or EioGpioMuxOne register (0x15) is set. |
| 4 | 1 | Gpio0Sc4 | RW | 0x00 | Pin: N.C.<br>0 = High impedance<br>1 = Output value is set by Gpio0Write register (0x1F) bit 4 |
| 5 | 1 | Gpio0Sc5 | RW | 0x00 | Pin: N.C.<br>0 = High impedance<br>1 = Output value is set by Gpio0Write register (0x1F) bit 5 |
| 6 | 1 | Gpio0Sc6 | RW | 0x00 | Pin: DIP#<br>0 = High impedance<br>1 = Output value is set by Gpio0Write register (0x1F) bit 6 |
| 7 | 1 | Gpio0Sc7 | RW | 0x00 | Pin: BTN#<br>0 = High impedance<br>1 = Output value is set by Gpio0Write register (0x1F) bit 7 |

*Table 36: Gpio0En Register (0x1D)*

### 2.3.30 GPIO 0 Read Register (0x1E)

This register contains the read values of the GPIO pins.

| Bit | Size | Field Name | Type | Reset | Description |
|---|---|---|---|---|---|
| 0 | 1 | Gpio0Sc0 | R | 0x00 | Read value of pin LED0# |
| 1 | 1 | Gpio0Sc1 | R | 0x00 | Read value of pin LED1# |
| 2 | 1 | Gpio0Sc2 | R | 0x00 | Read value of pin LED2# |
| 3 | 1 | Gpio0Sc3 | R | 0x00 | Read value of pin LED3# |
| 4 | 1 | Gpio0Sc4 | R | 0x00 | Read value of pin N.C. |
| 5 | 1 | Gpio0Sc5 | R | 0x00 | Read value of pin N.C. |
| 6 | 1 | Gpio0Sc6 | R | 0x00 | Read value of pin DIP# |
| 7 | 1 | Gpio0Sc7 | R | 0x00 | Read value of pin BTN# |

*Table 37: Gpio0Read Register (0x1E)*

### 2.3.31 GPIO 0 Write Register (0x1F)

If the corresponding bit in Gpio0En register (0x1D) is set, this register allows to drive the GPIO pin low or high depending on the selected value.

| Bit | Size | Field Name | Type | Reset | Description |
|---|---|---|---|---|---|
| 0 | 1 | Gpio0Sc0 | RW | 0x00 | Output value of pin LED0# when bit 0 in Gpio0En register (0x1D) is set and bit 1 of following registers is cleared: EioGpioMuxZero (0x14) and EioGpioMuxOne (0x15) |
| 1 | 1 | Gpio0Sc1 | RW | 0x00 | Output value of pin LED1# when bit 1 in Gpio0En register (0x1D) is set and bit 4 of following registers is cleared: EioGpioMuxZero (0x14) and EioGpioMuxOne (0x15) |
| 2 | 1 | Gpio0Sc2 | RW | 0x00 | Output value of pin LED2# when bit 2 in Gpio0En register (0x1D) is set and bit 2 of following registers is cleared: EioGpioMuxZero (0x14) and EioGpioMuxOne (0x15) |
| 3 | 1 | Gpio0Sc3 | RW | 0x00 | Output value of pin LED3# when bit 3 in Gpio0En register (0x1D) is set and bit 3 of following registers is cleared: EioGpioMuxZero (0x14) and EioGpioMuxOne (0x15) |
| 4 | 1 | Gpio0Sc4 | RW | 0x00 | Output value of pin N.C. when bit 4 in Gpio0En register (0x1D) is set |
| 5 | 1 | Gpio0Sc5 | RW | 0x00 | Output value of pin N.C. when bit 5 in Gpio0En register (0x1D) is set |
| 6 | 1 | Gpio0Sc6 | RW | 0x00 | Output value of pin DIP# when bit 6 in Gpio0En register (0x1D) is set |
| 7 | 1 | Gpio0Sc7 | RW | 0x00 | Output value of pin BTN# when bit 7 in Gpio0En register (0x1D) is set |

*Table 38: Gpio0Write Register (0x1F)*

### 2.3.32 GPIO 1 Enable Register (0x20)

Setting these bits to 1 allows to override the pin values.

| Bit | Size | Field Name | Type | Reset | Description |
|---|---|---|---|---|---|
| 0 | 1 | Gpio1Gpio0 | RW | 0x00 | Pin: USBCC_SINK_EN#<br>0 = High impedance<br>1 = Output value is set by Gpio1Write register (0x22) bit 0 |
| 1 | 1 | Gpio1Gpio1 | RW | 0x00 | Pin: M2_PERST#<br>0 = Output value of pin POR#_LOAD#<br>1 = Output value is set by Gpio1Write register (0x22) bit 1 |
| 2 | 1 | Gpio1Gpio2 | RW | 0x00 | Pin: FF_MODPRS#<br>0 = High impedance<br>1 = Output value is set by Gpio1Write register (0x22) bit 2 |
| 3 | 1 | Gpio1Gpio3 | RW | 0x00 | Pin: PWR_GOOD_USBCM<br>0 = High impedance<br>1 = Output value is set by Gpio1Write register (0x22) bit 3 |
| 4 | 1 | Gpio1Gpio4 | RW | 0x00 | Pin: FF_CPERST#<br>0 = High impedance<br>1 = Output value is set by Gpio1Write register (0x22) bit 4 |
| 5 | 1 | Gpio1Gpio5 | RW | 0x00 | Pin: USBCC_GPIO15<br>0 = High impedance<br>1 = Output value is set by Gpio1Write register (0x22) bit 5 |
| 6 | 1 | Gpio1Gpio6 | RW | 0x00 | Not used on this product |
| 7 | 1 | Gpio1Gpio7 | RW | 0x00 | Pin: PWR_GOOD_AUX<br>0 = High impedance<br>1 = Output value is set by Gpio1Write register (0x22) bit 7 |

*Table 39: Gpio1En Register (0x20)*

### 2.3.33 GPIO 1 Read Register (0x21)

This register contains the read values of the GPIO pins.

| Bit | Size | Field Name | Type | Reset | Description |
|---|---|---|---|---|---|
| 0 | 1 | Gpio1Gpio0 | R | 0x00 | Read value of pin USBCC_SINK_EN# |
| 1 | 1 | Gpio1Gpio1 | R | 0x00 | Read value of pin M2_PERST# |
| 2 | 1 | Gpio1Gpio2 | R | 0x00 | Read value of pin FF_MODPRS# |
| 3 | 1 | Gpio1Gpio3 | R | 0x00 | Read value of pin PWR_GOOD_USBCM |
| 4 | 1 | Gpio1Gpio4 | R | 0x00 | Read value of pin FF_CPERST# |
| 5 | 1 | Gpio1Gpio5 | R | 0x00 | Read value of pin USBCC_GPIO15 |
| 6 | 1 | Gpio1Gpio6 | R | 0x00 | Read value of pin VBUS_DETECT |
| 7 | 1 | Gpio1Gpio7 | R | 0x00 | Read value of pin PWR_GOOD_AUX |

*Table 40: Gpio1Read Register (0x21)*

### 2.3.34 GPIO 1 Write Register (0x22)

If the corresponding bit in Gpio1En register (0x20) is set, this register allows to drive the GPIO pin low or high depending on the selected value.

| Bit | Size | Field Name | Type | Reset | Description |
|---|---|---|---|---|---|
| 0 | 1 | Gpio1Gpio0 | RW | 0x00 | Output value of pin USBCC_SINK_EN# when bit 0 in Gpio1En register (0x20) is set |
| 1 | 1 | Gpio1Gpio1 | RW | 0x00 | Output value of pin M2_PERST# when bit 1 in Gpio1En register (0x20) is set |
| 2 | 1 | Gpio1Gpio2 | RW | 0x00 | Output value of pin FF_MODPRS# when bit 2 in Gpio1En register (0x20) is set |
| 3 | 1 | Gpio1Gpio3 | RW | 0x00 | Output value of pin PWR_GOOD_USBCM when bit 3 in Gpio1En register (0x20) is set |
| 4 | 1 | Gpio1Gpio4 | RW | 0x00 | Output value of pin FF_CPERST# when bit 4 in Gpio1En register (0x20) is set |
| 5 | 1 | Gpio1Gpio5 | RW | 0x00 | Output value of pin USBCC_GPIO15 when bit 5 in Gpio1En register (0x20) is set |
| 6 | 1 | Gpio1Gpio6 | RW | 0x00 | Not used on this product |
| 7 | 1 | Gpio1Gpio7 | RW | 0x00 | Output value of pin PWR_GOOD_AUX when bit 7 in Gpio1En register (0x20) is set |

*Table 41: Gpio1Write Register (0x22)*

### 2.3.35 GPIO 2 Multiplexer 0 Register (0x23)

Some GPIO 2 pins can be used for other purposes than GPIO. This register in combination with Gpio2Mux1 register (0x24) is used to control the pin multiplexer.

| Bit | Size | Field Name | Type | Reset | Description | | |
|---|---|---|---|---|---|---|---|
| 0 | 1 | Gpio2Mux0[0] | RW | 0x01 | Multiplexer select bit 0 for pin SIO0_PERST# | | |
| | | | | | **Bit 1** | **Bit 0** | **Description** |
| | | | | | 0 | 0 | GPIO |
| | | | | | 0 | 1 | Connection SIO0_PERST# ↔ PCIE_PERST# |
| | | | | | 1 | 1 | Connection SIO0_PERST# ↔ PCIE_PERST# |
| | | | | | 1 | 0 | Interrupt output |
| 1 | 1 | Gpio2Mux1 | RW | 0x00 | Multiplexer select for pin SIO1<br>0 = GPIO<br>1 = Interrupt output | | |
| 2 | 1 | Gpio2Mux2 | RW | 0x01 | Multiplexer select for pin SIO2_SDCD#<br>0 = GPIO<br>1 = Connection SIO2_SDCD# ← SDCARD_CD# | | |
| 7:3 | 5 | Unused | R0 | 0x00 | - | | |

*Table 42: Gpio2Mux0 Register (0x23)*

### 2.3.36 GPIO 2 Multiplexer 1 Register (0x24)

Some GPIO 2 pins can be used for other purposes than GPIO. This register in combination with Gpio2Mux0 register (0x23) is used to control the pin multiplexer.

| Bit | Size | Field Name | Type | Reset | Description | | |
|---|---|---|---|---|---|---|---|
| 0 | 1 | Gpio2Mux0[1] | RW | 0x00 | Multiplexer select bit 1 for pin SIO0_PERST# | | |
| | | | | | **Bit 1** | **Bit 0** | **Description** |
| | | | | | 0 | 0 | GPIO |
| | | | | | 0 | 0 | Connection SIO0_PERST# ↔ PCIE_PERST# |
| | | | | | 1 | 0 | Connection SIO0_PERST# ↔ PCIE_PERST# |
| | | | | | 1 | 0 | Interrupt output |
| 7:1 | 7 | Unused | R0 | 0x00 | - | | |

*Table 43: Gpio2Mux1 Register (0x24)*

### 2.3.37 GPIO 2 Enable Register (0x25)

If the GPIO 2 multiplexer (register 0x23/0x24) is configured to select GPIO functionality, setting these bits to 1 allows to override the pin values.

| Bit | Size | Field Name | Type | Reset | Description |
|---|---|---|---|---|---|
| 0 | 1 | Gpio2Sio0 | RW | 0x00 | Pin: SIO0_PERST#<br>0 = High impedance<br>1 = Output value is set by Gpio2Write register (0x27) bit 0 |
| 1 | 1 | Gpio2Sio1 | RW | 0x00 | Pin: SIO1<br>0 = High impedance<br>1 = Output value is set by Gpio2Write register (0x27) bit 1 |
| 2 | 1 | Gpio2Sio2 | RW | 0x00 | Pin: SIO2_SDCD#<br>0 = High impedance<br>1 = Output value is set by Gpio2Write register (0x27) bit 2 |
| 3 | 1 | Gpio2Sio3 | RW | 0x00 | Pin: SIO3<br>0 = High impedance<br>1 = Output value is set by Gpio2Write register (0x27) bit 3 |
| 4 | 1 | Gpio2Gpio8 | RW | 0x00 | Pin: PWR_EN_3V3_MOD<br>0 = High impedance<br>1 = Output value is set by Gpio2Write register (0x27) bit 4 |
| 7:5 | 3 | Unused | R0 | 0x00 | - |

*Table 44: Gpio2En Register (0x25)*

### 2.3.38 GPIO 2 Read Register (0x26)

This register contains the read values of the GPIO pins.

| Bit | Size | Field Name | Type | Reset | Description |
|---|---|---|---|---|---|
| 0 | 1 | Gpio2Sio0 | R | 0x00 | Read value of pin SIO0_PERST# |
| 1 | 1 | Gpio2Sio1 | R | 0x00 | Read value of pin SIO1 |
| 2 | 1 | Gpio2Sio2 | R | 0x00 | Read value of pin SIO2_SDCD# |
| 3 | 1 | Gpio2Sio3 | R | 0x00 | Read value of pin SIO3 |
| 4 | 1 | Gpio2Gpio8 | R | 0x00 | Read value of pin PWR_EN_3V3_MOD |
| 7:5 | 3 | Unused | R0 | 0x00 | - |

*Table 45: Gpio2Read Register (0x26)*

### 2.3.39 GPIO 2 Write Register (0x27)

If the corresponding bit in Gpio2En register (0x25) is set and the GPIO2 multiplexer (0x23/0x24) is configured to enable the GPIO functionality of the pin, this register allows to drive the GPIO pin low or high depending on the selected value.

| Bit | Size | Field Name | Type | Reset | Description |
|---|---|---|---|---|---|
| 0 | 1 | Gpio2Sio0 | RW | 0x00 | Output value of pin SIO0_PERST# when bit 0 in Gpio2En register (0x25) is set |
| 1 | 1 | Gpio2Sio1 | RW | 0x00 | Output value of pin SIO1 when bit 1 in Gpio2En register (0x25) is set |
| 2 | 1 | Gpio2Sio2 | RW | 0x00 | Output value of pin SIO2_SDCD# when bit 2 in Gpio2En register (0x25) is set |
| 3 | 1 | Gpio2Sio3 | RW | 0x00 | Output value of pin SIO3 when bit 3 in Gpio2En register (0x25) is set |
| 4 | 1 | Gpio2Gpio8 | RW | 0x00 | Output value of pin PWR_EN_3V3_MOD when bit 4 in Gpio2En register (0x25) is set |
| 7:5 | 3 | Unused | R0 | 0x00 | - |

*Table 46: Gpio2Write Register (0x27)*

### 2.3.40 Hardware ID Register (0x28)

The hardware ID is read at startup. It is used to identify the board and to enable/disable board specific features.

| Bit | Size | Field Name | Type | Reset | Description |
|---|---|---|---|---|---|
| 3:0 | 4 | HwId | R | 0x07 | Hardware ID read at startup |
| 4 | 1 | Reserved | R1 | 0x01 | - |
| 7:5 | 3 | Unused | R0 | 0x00 | - |

*Table 47: HwId Register (0x28)*

### 2.3.41 Version Year MSB Register (0x2B)

The build version is stored in four registers. This register contains the most significant bits of the build year.

| Bit | Size | Field Name | Type | Reset | Description |
|---|---|---|---|---|---|
| 2:0 | 3 | VersionYearMsb | R | 0x07 | Version Year MSB (Bit 10:8) |
| 7:3 | 5 | Unused | R0 | 0x00 | - |

*Table 48: VersionYearMsb Register (0x2B)*

### 2.3.42 Version Year LSB Register (0x2C)

The build version is stored in four registers. This register contains the least significant bits of the build year.

| Bit | Size | Field Name | Type | Reset | Description |
|---|---|---|---|---|---|
| 7:0 | 8 | VersionYearLsb | R | 0xE6 | Version Year LSB (Bit 7:0) |

*Table 49: VersionYearLsb Register (0x2C)*

### 2.3.43 Version Month Register (0x2D)

The build version is stored in four registers. This register contains the build month.

| Bit | Size | Field Name | Type | Reset | Description |
|---|---|---|---|---|---|
| 3:0 | 4 | VersionMonth | R | 0x01 | Version Month |
| 7:4 | 4 | Unused | R0 | 0x00 | - |

*Table 50: VersionMonth Register (0x2D)*

### 2.3.44 Version Day Register (0x2E)

The build version is stored in four registers. This register contains the build day.

| Bit | Size | Field Name | Type | Reset | Description |
|---|---|---|---|---|---|
| 4:0 | 5 | VersionDay | R | 0x1F | Version Day |
| 7:5 | 3 | Unused | R0 | 0x00 | - |

*Table 51: VersionDay Register (0x2E)*

# 3 Upgrade

## 3.1 Upgrade using Enclustra Module Configuration Tool

The Enclustra Module Configuration Tool (MCT) provides a user friendly way to upgrade the System Controller firmware. MCT as well as the most recent System Controller binary file can be downloaded from the Enclustra web page. This feature is supported only in MCT version 2.8.1 or later.

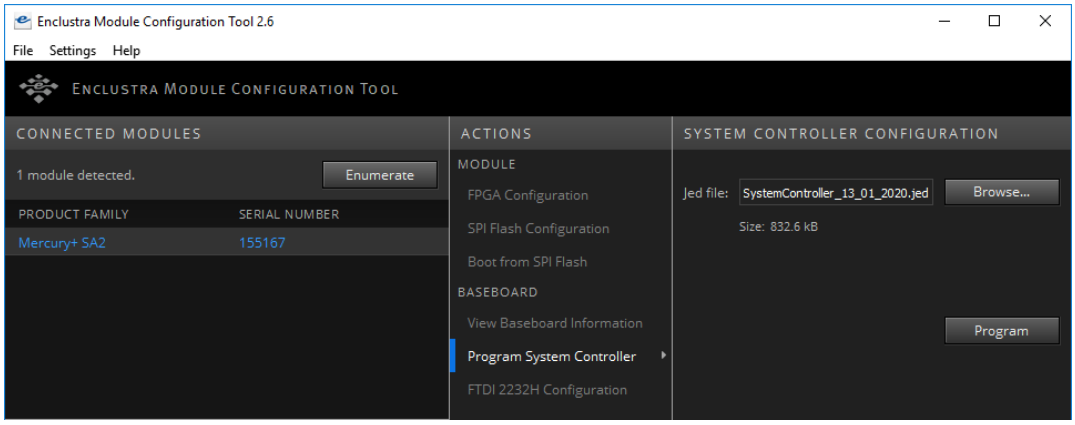


*Figure 5: Upgrade using MCT*

To perform an upgrade, following steps need to be executed:

- Equip the Mercury+ PE3 base board with an Enclustra module
- Power up the Mercury+ PE3 base board
- Connect the micro USB port labeled with USBUB of the Mercury+ PE3 base board to your PC
- Start the Enclustra Module Configuration Tool
- Click on "Enumerate", if no module was detected
- Select "Program System Controller" as action and enter the JEDEC programming file, as shown in figure 5
- Click "Program" and wait until the programming procedure has completed. This process takes about two minutes.
- The System Controller immediately reconfigures itself with the upgraded configuration. No restart or power cycle is needed.

## List of Figures


1 System Controller Overview . . . 5
2 Board Power Control FSM . . . 6
3 Reset Sequence . . . 7
4 Register Bank Access by I2C bus . . . 9
5 Upgrade using MCT . . . 36


## List of Tables


1 Pins Latched at Startup . . . 7
2 Possible Interrupt Sources . . . 8
3 FTDI Multiplexer Modes . . . 10
4 MGT Multiplexer Initialization for M.2, USB and Display Port . . . 12
5 MGT Multiplexer Initialization for PCIe . . . 13
6 Register Field Types . . . 15
7 I2C Register Bank Overview . . . 16
8 ScConfig Register (0x00) . . . 16
9 ScStatus Register (0x01) . . . 17
10 BoardPowerControl Register (0x02) . . . 17
11 BoardPowerStatus Register (0x03) . . . 17
12 BoardPowerButtonTime Register (0x04) . . . 17
13 ModulePowerControl Register (0x05) . . . 18
14 ModulePowerStatus Register (0x06) . . . 18
15 Debug Register (0x07) . . . 18
16 Error Register (0x07) . . . 19
17 Action Register (0x0A) . . . 19
18 InterruptStatus Register (0x0B) . . . 19
19 InterruptEn Register (0x0C) . . . 20
20 InterruptEdge Register (0x0D) . . . 20
21 BootConfigEn Register (0x0E) . . . 21
22 BootConfigRead Register (0x0F) . . . 21
23 BootConfigWrite Register (0x10) . . . 21
24 MiscGpioEn Register (0x11) . . . 22
25 MiscGpioRead Register (0x12) . . . 22
26 MiscGpioWrite Register (0x13) . . . 23
27 EioGpioMux0 Register (0x14) . . . 24
28 EioGpioMux1 Register (0x15) . . . 25
29 EioGpioEn Register (0x16) . . . 26
30 EioGpioRead Register (0x17) . . . 26
31 EioGpioWrite Register (0x18) . . . 27
32 UsbGpioEn Register (0x19) . . . 27
33 UsbGpioRead Register (0x1A) . . . 28
34 UsbGpioWrite Register (0x1B) . . . 28
35 Gpo Register (0x1C) . . . 28
36 Gpio0En Register (0x1D) . . . 29
37 Gpio0Read Register (0x1E) . . . 29
38 Gpio0Write Register (0x1F) . . . 30
39 Gpio1En Register (0x20) . . . 30
40 Gpio1Read Register (0x21) . . . 31
41 Gpio1Write Register (0x22) . . . 31
42 Gpio2Mux0 Register (0x23) . . . 32
43 Gpio2Mux1 Register (0x24) . . . 32
44 Gpio2En Register (0x25) . . . 33
45 Gpio2Read Register (0x26) . . . 33
46 Gpio2Write Register (0x27) . . . 34

47 HwId Register (0x28) . . . . . 34
48 VersionYearMsb Register (0x2B) . . . . . 34
49 VersionYearLsb Register (0x2C) . . . . . 34
50 VersionMonth Register (0x2D) . . . . . 35
51 VersionDay Register (0x2E) . . . . . 35