Enclustra User Schematics

Mars AX3 Revision 3.2

Disclaimer

User schematics do not include proprietary Enclustra design elements, such as power supply circuits.
These circuits use optimized designs which are extremely compact and remain proprietary to Enclustra.
The user manual provides all necessary information to use the module and its interfaces.

User schematics are provided after purchase of Enclustra hardware, and may also be provided in certain cases before purchase, to assist in product evaluation.
No part of the schematics may be copied or modified without written permission from Enclustra.

Full schematics, including a full bill-of-materials, may be available through the purchase of a hardware licence for the product in question.
Please contact Enclustra Sales for more information.

Note: DNE = Do Not Equip (parts not equipped by default)

© Enclustra GmbH

Mars AX3 FPGA Module

Revision 3.2

Sheet 1: Cover
Sheet 2: FPGA Bank 14 / 15 / Configuration
Sheet 3: FPGA Bank 16 / 34 / 35 / User LEDs
Sheet 4: FPGA Power / Decoupling
Sheet 5: SO-DIMM Connector
Sheet 6: Oscillator / Real-time Clock / Secure EEPROM
Sheet 7: Gigabit Ethernet
Sheet 8: Quad SPI FLASH
Sheet 9: DDR3L SDRAM
Sheet 10: Power Converters 1.8V / 1.35V / 1.5V
Sheet 11: Power Converter 1.0V
Sheet 12: Mechanics
Sheet 13: Assembly Variants

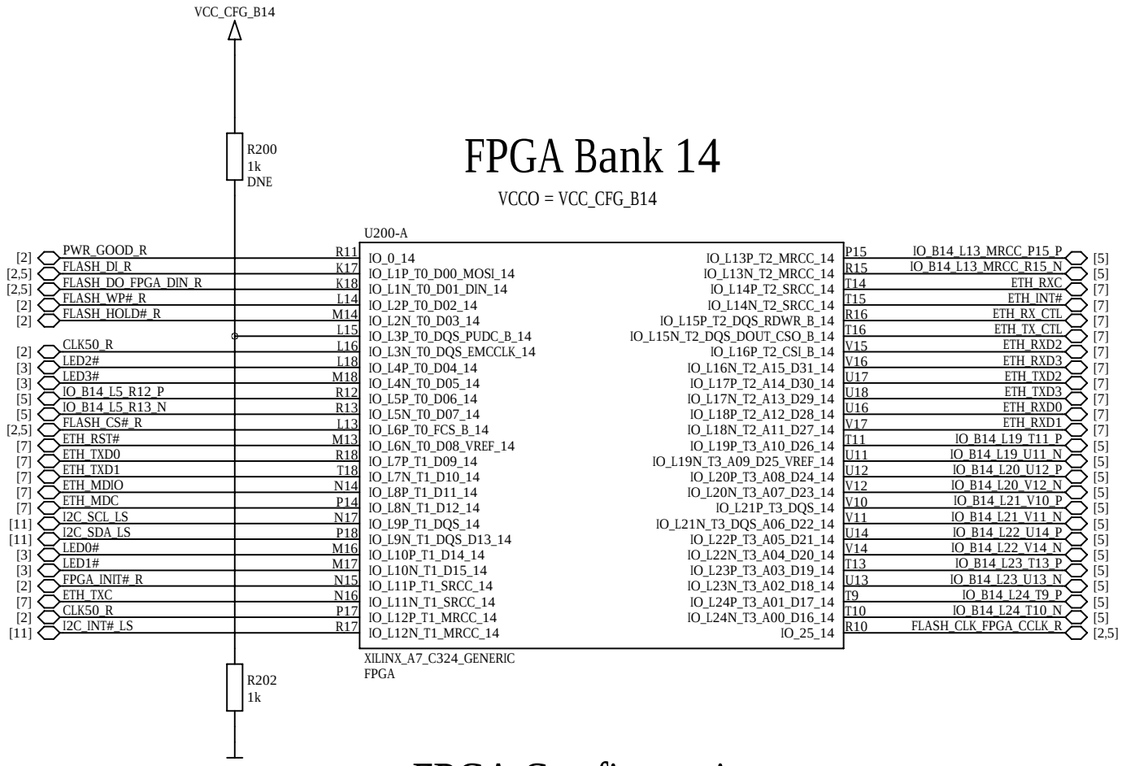

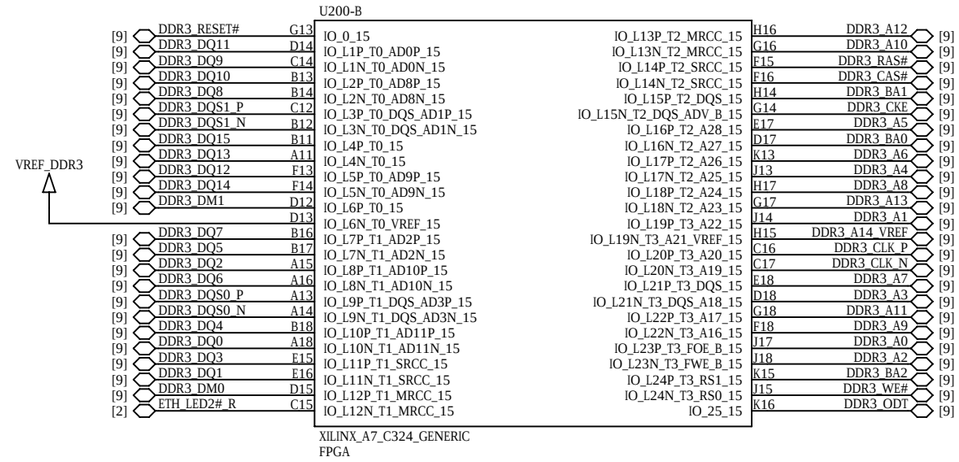

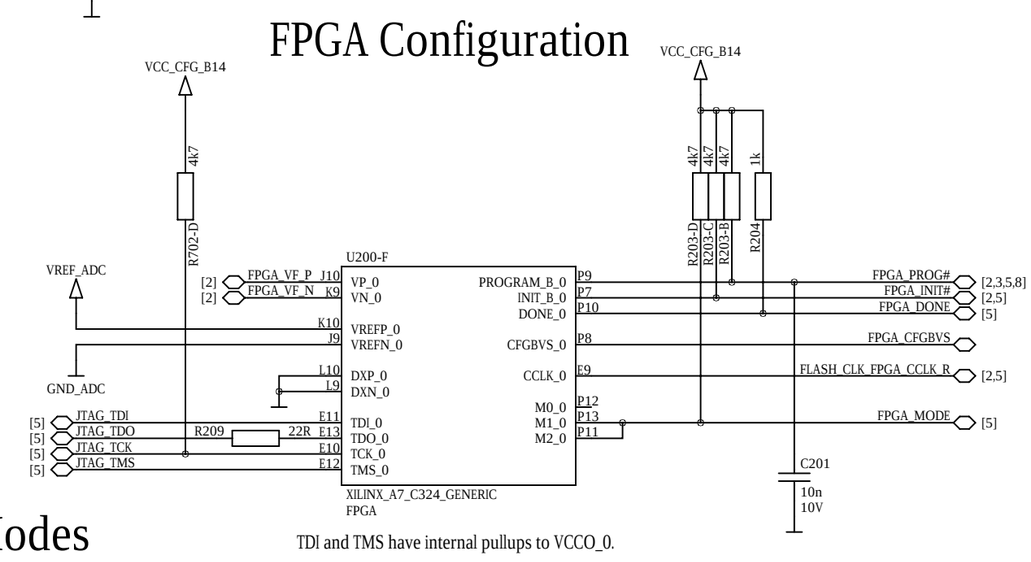

TDI and TMS have internal pullups to VCCO_0.

Series Resistors

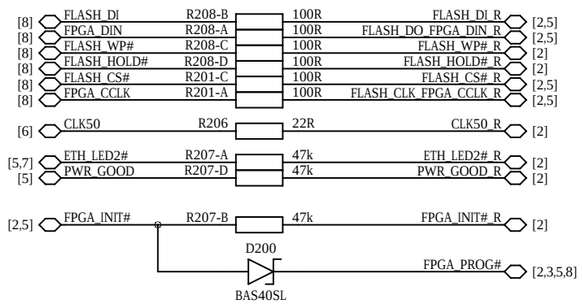

ADC Anti-Alias Filter

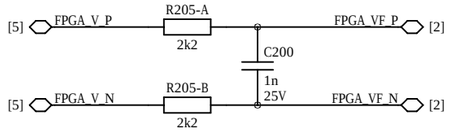

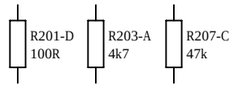

Boot Modes

	Boot Mode	Mode
	0	Active Serial
Default	1	Passive Serial

ENCLUSTRA	Copyright	© 2017 by Enclustra GmbH	Sheet Name	2_FPGA_BANK14/15/CONFIG	Customer No	0000	Revision	R3.2	DNE = do not equip	Confidential
	Company	Enclustra GmbH	Project	Mars AX3	Project No	426	Designed	MHEI	Date 06 Oct 2017	Sheet/sheets 2 / 13

FPGA Bank 34

VCCO = VCC_IO_B34

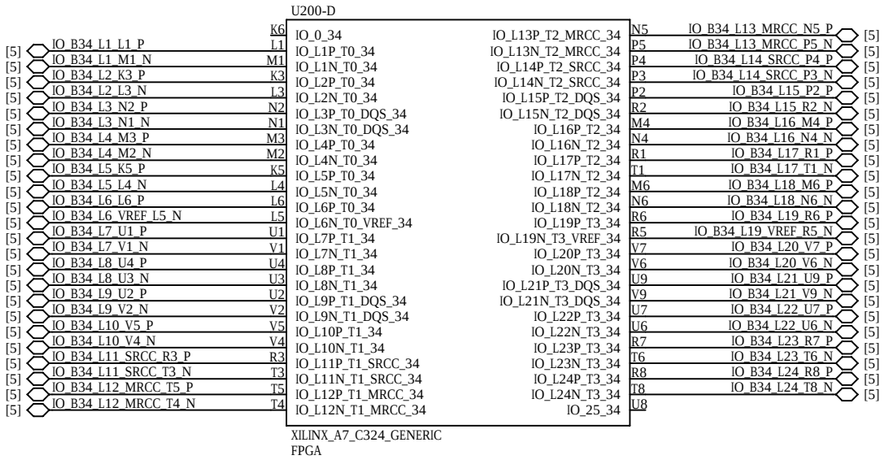

FPGA Bank 35

VCCO = VCC_IO_B35

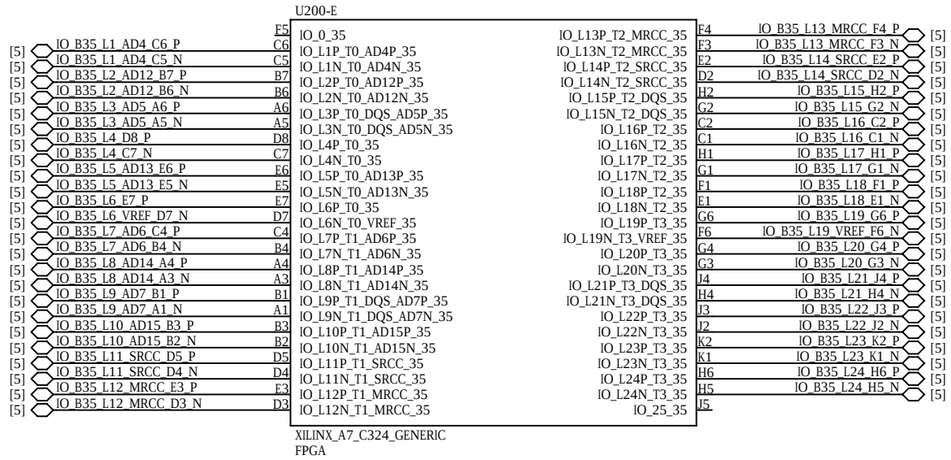

FPGA Bank 16

VCCO = VCC_CFG_B14

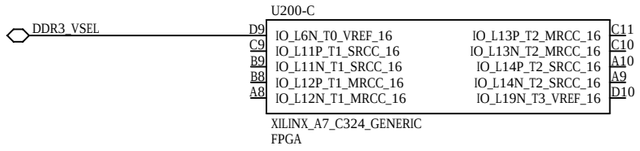

LED Power

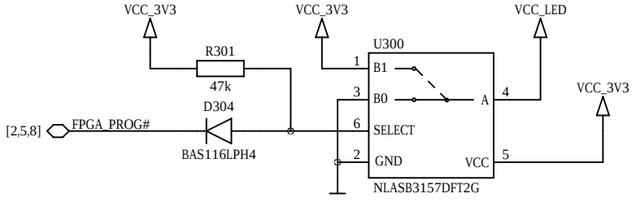

User LEDs

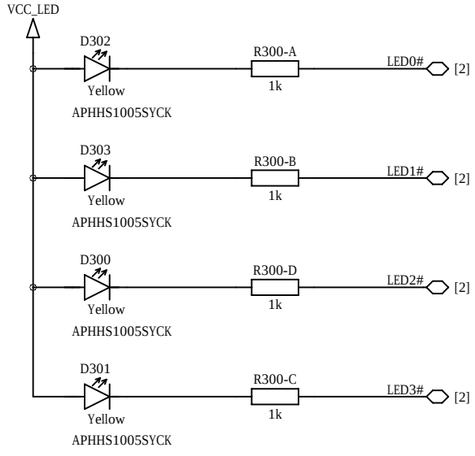

ENCLUSTRA	Copyright © 2017 by Enclustra GmbH	Sheet Name 3_FPGA_BANK16/34/35/LEDS	Customer No 0000	Revision R3.2	DNE = do not equip	Confidential	
	Company Enclustra GmbH	Project Mars AX3	Project No 426	Designed MHEI	Date 06 Oct 2017	Sheet/sheets 3 / 13	

FPGA Decoupling

not included in user schematics

This part is intentionally left blank.

FPGA Power

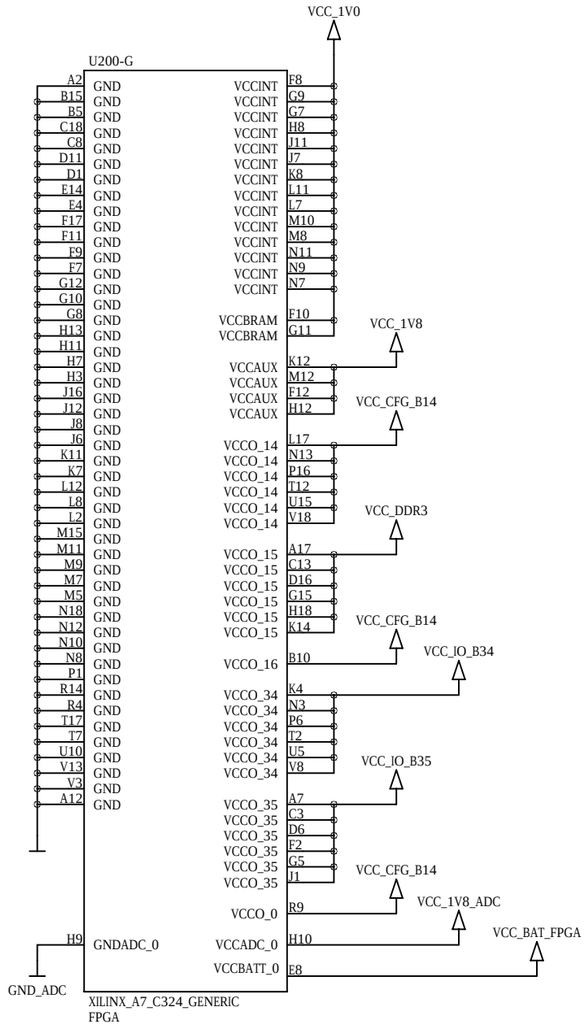

ADC Power Filter

not included in user schematics

This part is intentionally left blank.

ADC Voltage Reference

optional

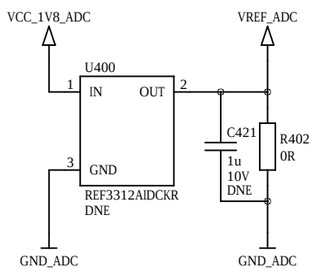

FPGA Battery Voltage

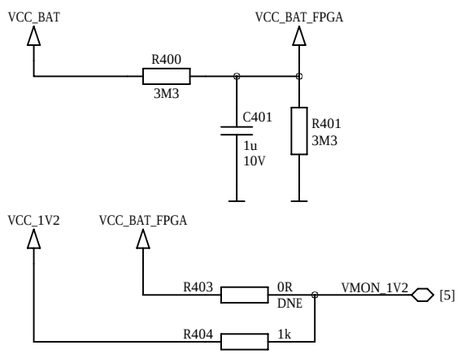

ENCLUSTRA	Copyright © 2017 by Enclustra GmbH	Sheet Name 4_FPGA_POWER/DECOUPLING	Customer No 0000	Revision R3.2	DNE = do not equip	Confidential	
	Company Enclustra GmbH	Project Mars AX3	Project No 426	Designed MHEI	Date 06 Oct 2017	Sheet/sheets 4 / 13	

SO-DIMM Connector

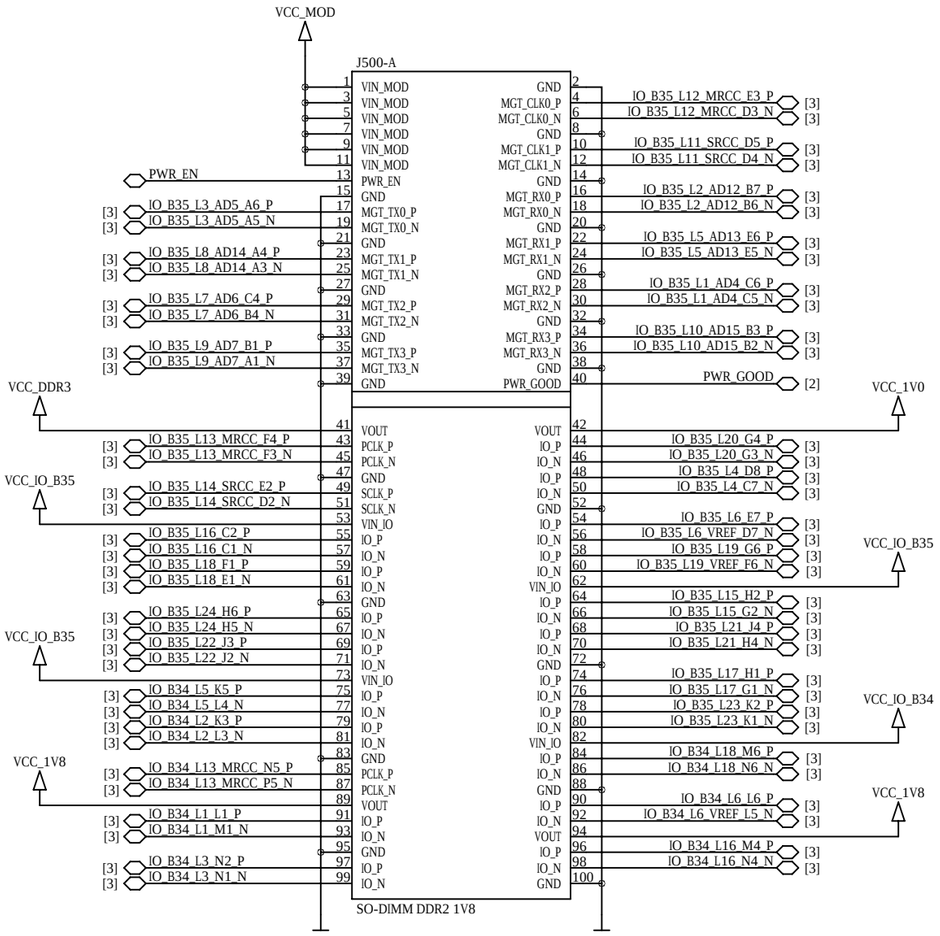

Do not use reverse low-profile SO-DIMM socket on carrier board as some components are higher than in the SO-DIMM specification.

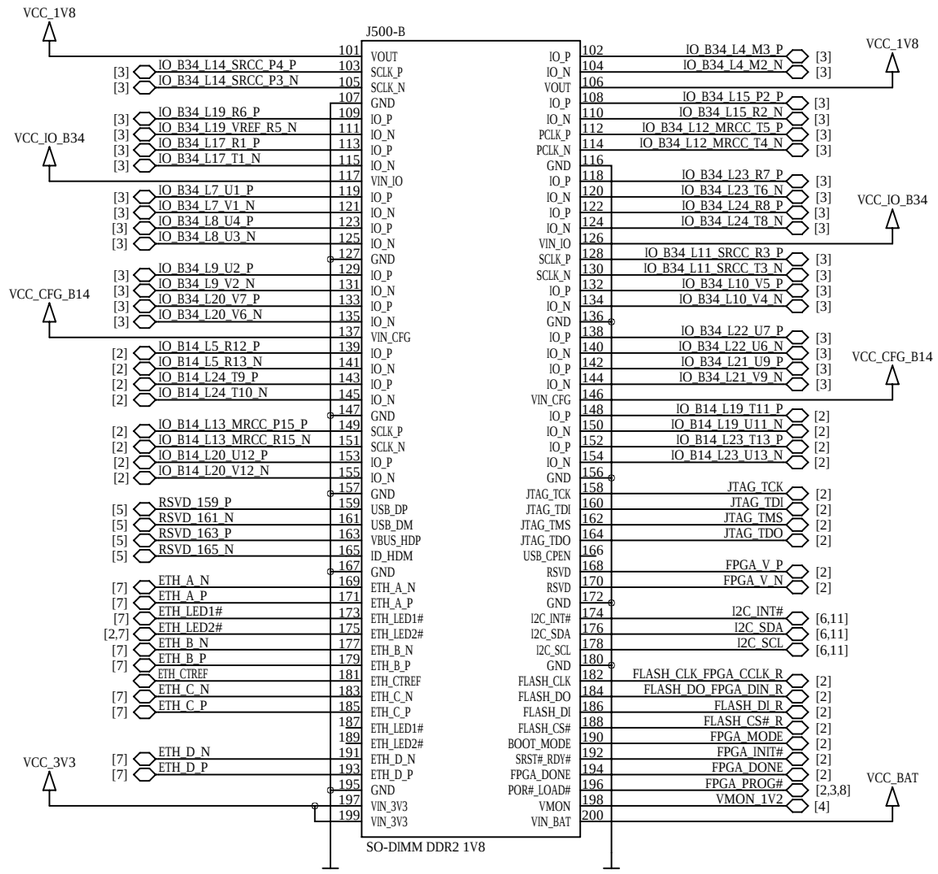

Supported Voltage Ranges

Power Rail	Direction	Range	Tolerance
VCC_MOD	input	3.3V - 5.0V	±10%
VCC_3V3	input	3.3V	±5%
VCC_IO_B34	input	1.2V - 3.3V	±5%
VCC_IO_B35	input	1.2V - 3.3V	±5%
VCC_CFG_B14	input	1.8V, 2.5V - 3.3V	±5%
VCC_1V8	output	1.8V	±5%
VCC_DDR3	output	1.35V / 1.5V	±5%
VCC_1V0	output	1.0V	±5%
VCC_BAT	input	2.0V - 3.6V	-

optional

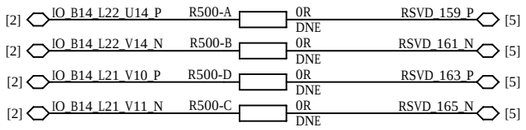

Real-time Clock

optional

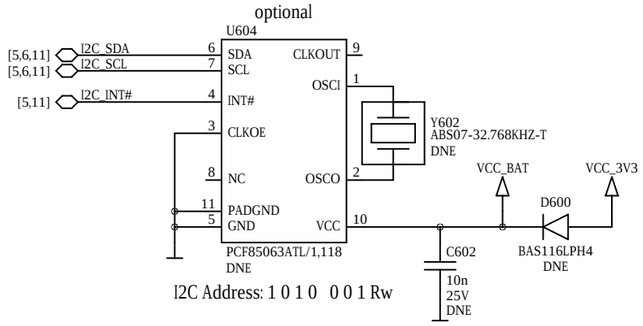

I2C Address: 1 0 1 0 0 0 1 Rw

Secure EEPROM

for Enclustra use only

only one EEPROM can be mounted

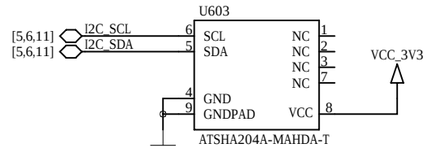

I2C Address: 1 1 0 0 1 0 0 Rw

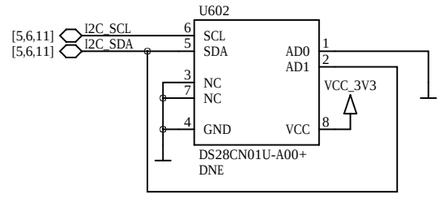

I2C Address: 1 0 1 1 1 0 0 Rw

Oscillator

Clock Divider

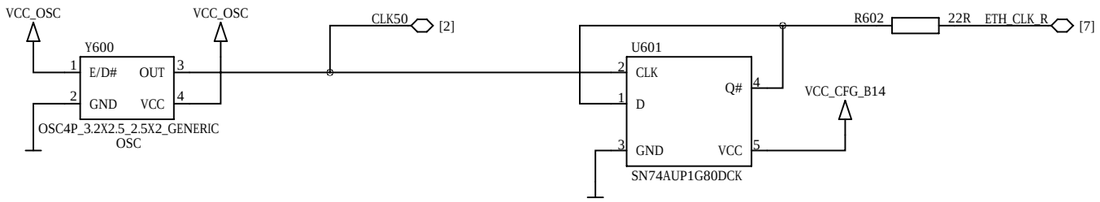

Oscillator Supply Filter

not included in user schematics

Power Decoupling

not included in user schematics

This part is intentionally left blank.

ENCLUSTRA	Copyright	© 2017 by Enclustra GmbH	Sheet Name	6_OSC/REAL_TIME/EEPROMS	Customer No	0000	Revision	R3.2	DNE = do not equip	Confidential
	Company	Enclustra GmbH	Project	Mars AX3	Project No	426	Designed	MHEI	Date 06 Oct 2017	Sheet/sheets 6 / 13

Gigabit Ethernet PHY

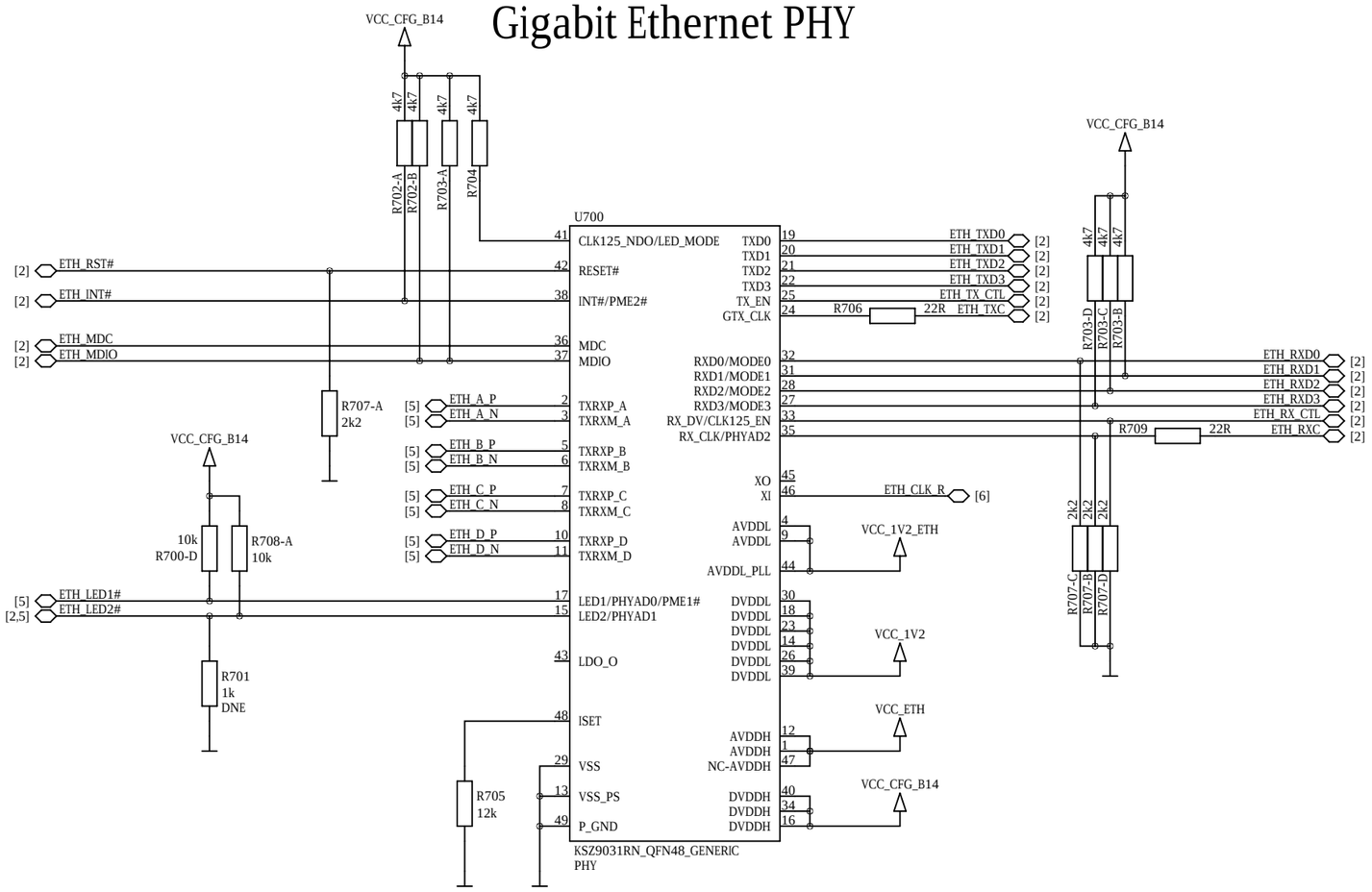

MODE<3:0> = 1110 -> RGMII, all capabilities
LED_Mode Pull up = Single LED
PhyAddress <2:0> = 011
LED1 and LED2 are active low

Gigabit Ethernet Power

not included in user schematics

This part is intentionally left blank.

ENCLUSTRA	Copyright	© 2017 by Enclustra GmbH	Sheet Name	7_GIGABIT_ETHERNET	Customer No	0000	Revision	R3.2	DNE = do not equip	Confidential
	Company	Enclustra GmbH	Project	Mars AX3	Project No	426	Designed	MHEI	Date 06 Oct 2017	Sheet/sheets 7 / 13

Quad SPI Flash

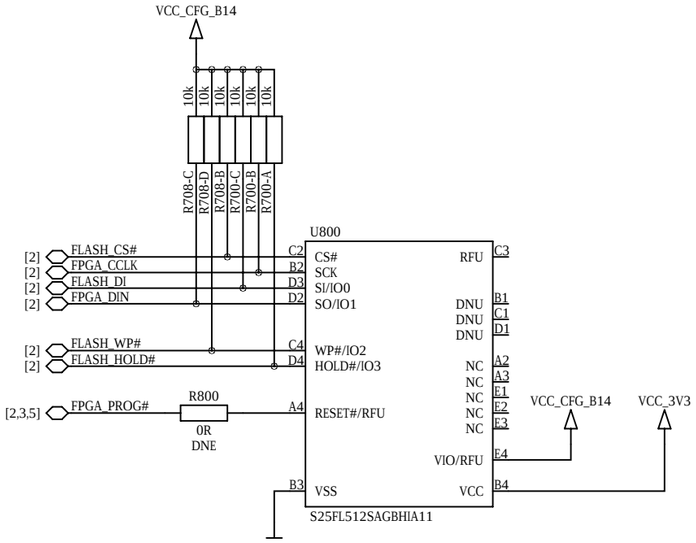

DDR3L SDRAM

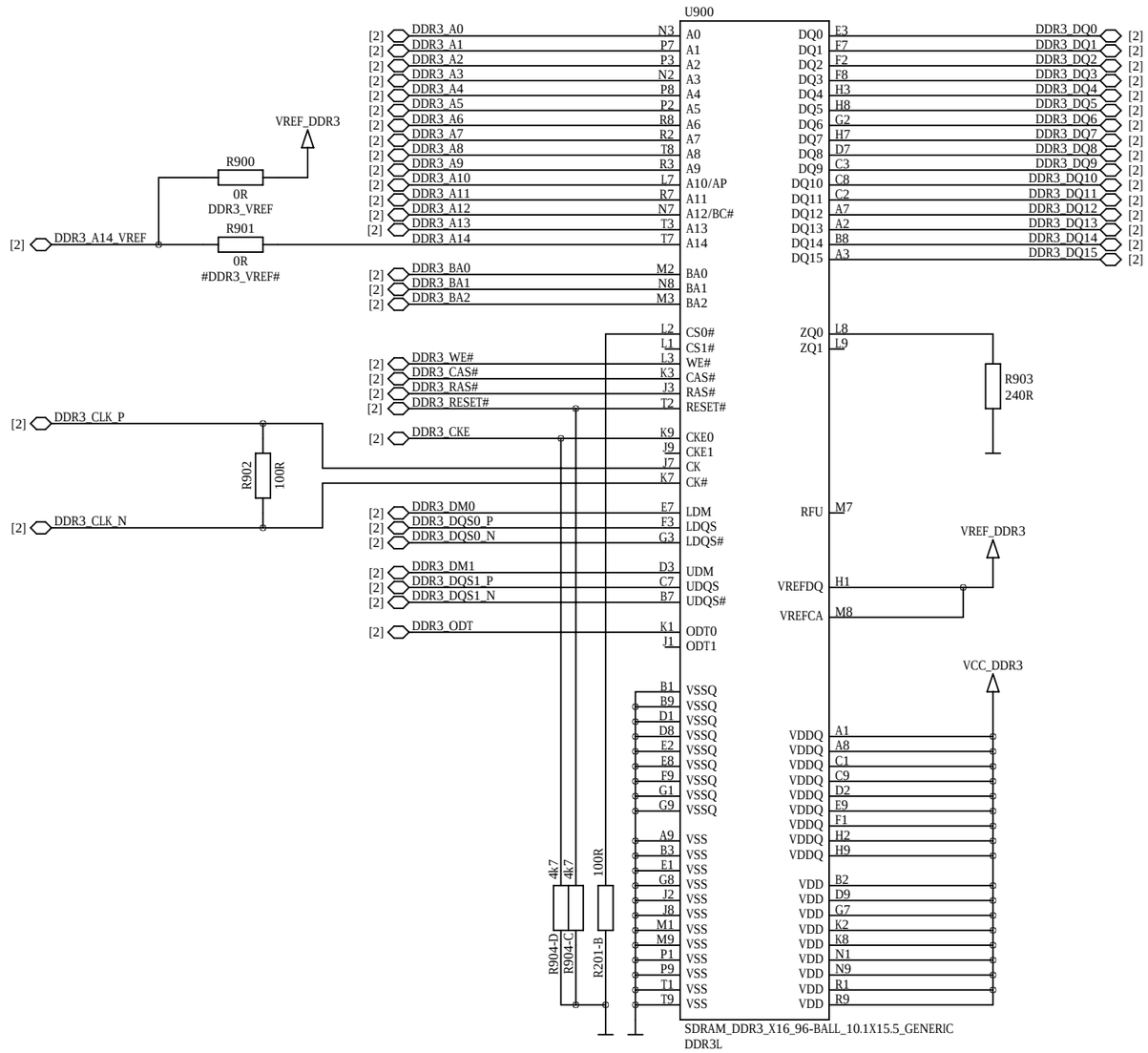

VREF Generation

not included in user schematics

This part is intentionally left blank.

Power Decoupling

not included in user schematics

This part is intentionally left blank.

ENCLUSTRA	Copyright	© 2017 by Enclustra GmbH	Sheet Name	9_SDRAM	Customer No	0000	Revision	R3.2	DNE = do not equip	Confidential
	Company	Enclustra GmbH	Project	Mars AX3	Project No	426	Designed	MHEI	Date 06 Oct 2017	Sheet/sheets 9 / 13

Dual DC/DC Converter

channel 1: 1.8V 2A 2.8%

channel 2: 1.5V/1.35V 2A 3%

not included in user schematics

This part is intentionally left blank.

DDR3_VSEL	VCC_DDR3
"Z"	1.5V
"0"	1.35V
"1"	Invalid

R1007-A
10k

DC/DC Converter 1.0V 4A

not included in user schematics

This part is intentionally left blank.

Power Input Filter

not included in user schematics

This part is intentionally left blank.

Voltage Select Detection

not included in user schematics

This part is intentionally left blank.

I2C Level Shifter

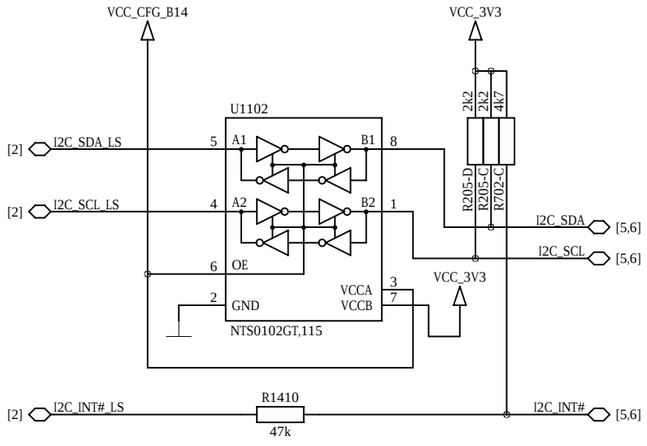

ENCLUSTRA	Copyright	© 2017 by Enclustra GmbH	Sheet Name	11_POWER_1.0V	Customer No 0000	Revision R3.2	DNE = do not equip	Confidential
	Company	Enclustra GmbH	Project	Mars AX3	Project No 426	Designed MHEI	Date 06 Oct 2017	Sheet/sheets 11 / 13

PCB

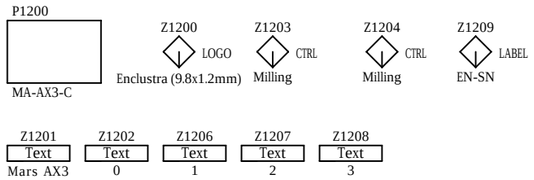

Fiducials

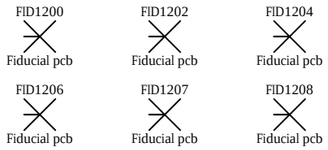

Heat sinks

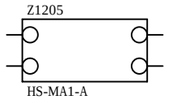

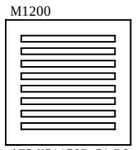

Panel Fiducials

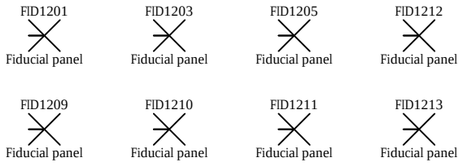

Component Variants

FPGA	DDR3L	Ethernet PHY	DDR3_VREF	ETH_POWER	OSC
Part U200A XC7A35T-1CSG324C EN100720 Part U200B XC7A35T-1CSG324I EN100632 Part U200C XC7A50T-1CSG324C EN100721 Part U200D XC7A50T-1CSG324I EN100633 Part U200E XC7A100T-1CSG324C EN100564 Part U200F XC7A100T-2CSG324I EN100563	Part U900A:1 NT5CC128M16IP-DII EN101880 Part U900A:2 MT41K128M16JT-125 IT:K EN100254 Part U900B:1 NT5CC128M16IP-DI EN100912 Part U900B:2 MT41K128M16JT-125:K EN100255	Part U700A KSZ9031RNXIA EN101934 Part U700B KSZ9031RNXCA EN100202	R900 / R901	L701 / L702	Part Y600A ASEMB_50.000MHZ-LC-T EN100288 Part Y600B ASDMB-50.000MHZ-LC-T EN100918

Assembly Variants

Assembly Variant	FPGA	DDR3L	Ethernet PHY	DDR3_VREF	ETH_POWER	OSC
Variant EN101294:0 MA-AX3-35-1C-D8-R3	Option EN101294:1 FPGA EN100720	Option EN101294:2 DDR3L EN100912	Option EN101294:3 PHY EN101934	Option EN101294:4 DDR3_VREF	Option EN101294:5 ETH_POWER DNE	Option EN101294:6 OSC EN100288
Variant EN101295:0 MA-AX3-35-1I-D8-R3	Option EN101295:1 FPGA EN100632	Option EN101295:2 DDR3L EN101880	Option EN101295:3 PHY EN101934	Option EN101295:4 DDR3_VREF	Option EN101295:5 ETH_POWER	Option EN101295:6 OSC EN100288
Variant EN101296:0 MA-AX3-50-1C-D8-R3	Option EN101296:1 FPGA EN100721	Option EN101296:2 DDR3L EN100912	Option EN101296:3 PHY EN101934	Option EN101296:4 DDR3_VREF	Option EN101296:5 ETH_POWER DNE	Option EN101296:6 OSC EN100288
Variant EN101297:0 MA-AX3-50-1I-D8-R3	Option EN101297:1 FPGA EN100633	Option EN101297:2 DDR3L EN101880	Option EN101297:3 PHY EN101934	Option EN101297:4 DDR3_VREF	Option EN101297:5 ETH_POWER	Option EN101297:6 OSC EN100288
Variant EN101298:0 MA-AX3-100-1C-D8-R3	Option EN101298:1 FPGA EN100564	Option EN101298:2 DDR3L EN100912	Option EN101298:3 PHY EN101934	Option EN101298:4 DDR3_VREF	Option EN101298:5 ETH_POWER DNE	Option EN101298:6 OSC EN100288
Variant EN101299:0 MA-AX3-100-2I-D8-R3	Option EN101299:1 FPGA EN100563	Option EN101299:2 DDR3L EN101880	Option EN101299:3 PHY EN101934	Option EN101299:4 DDR3_VREF	Option EN101299:5 ETH_POWER	Option EN101299:6 OSC EN100288