Enclustra User Schematics

Mercury CA1 Revision 6.1

Disclaimer

User schematics do not include proprietary Enclustra design elements, such as power supply circuits.
These circuits use optimized designs which are extremely compact and remain proprietary to Enclustra.
The user manual provides all necessary information to use the module and its interfaces.

User schematics are provided after purchase of Enclustra hardware, and may also be provided in certain cases before purchase, to assist in product evaluation.
No part of the schematics may be copied or modified without written permission from Enclustra.

Full schematics, including a full bill-of-materials, may be available through the purchase of a hardware licence for the product in question.
Please contact Enclustra Sales for more information.

Note: DNE = Do Not Equip (parts not equipped by default)

© Enclustra GmbH

Mercury CA1

Revision 6.1

Sheet 1: Cover
Sheet 2: FPGA Bank 1/2 / Configuration
Sheet 3: FPGA Bank 3/4/5
Sheet 4: FPGA Bank 6/7/8
Sheet 5: FPGA Power
Sheet 6: FPGA Decoupling
Sheet 7: Module Connectors
Sheet 8: Real-time Clock / EEPROM / FLASH / Oscillator
Sheet 9: DDR2 SDRAM
Sheet 10: Gigabit Ethernet PHY
Sheet 11: FTDI USB / Configuration Multiplexers
Sheet 12: Power 1.2V / 3.3V
Sheet 13: Power 2.5V / 1.8V
Sheet 14: Mechanics
Sheet 15: Assembly Variants

FPGA Bank 1

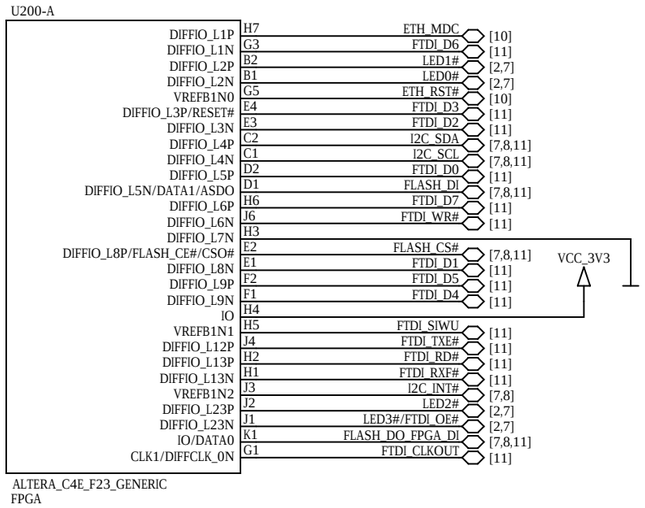

Some IO-Pins are connected to VCCIO or GND to support migration between different FPGA devices.

FPGA Bank 2

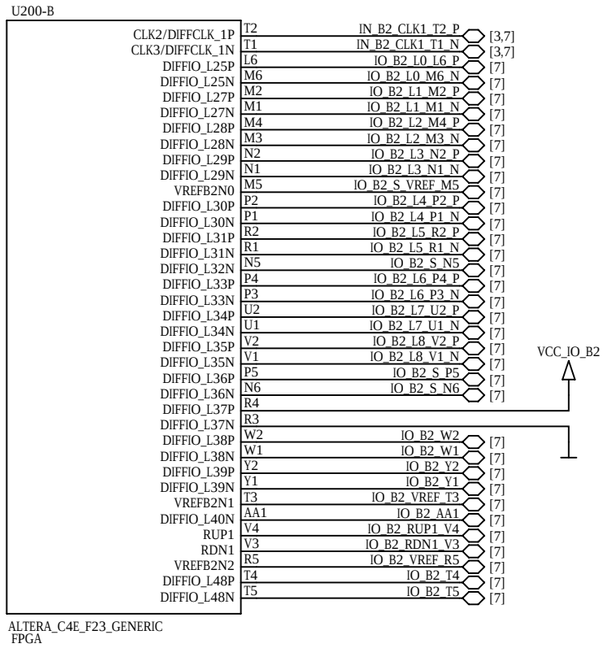

User LEDs

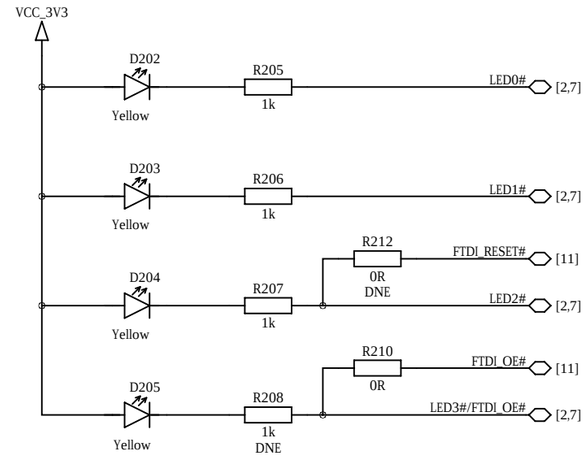

FPGA Configuration

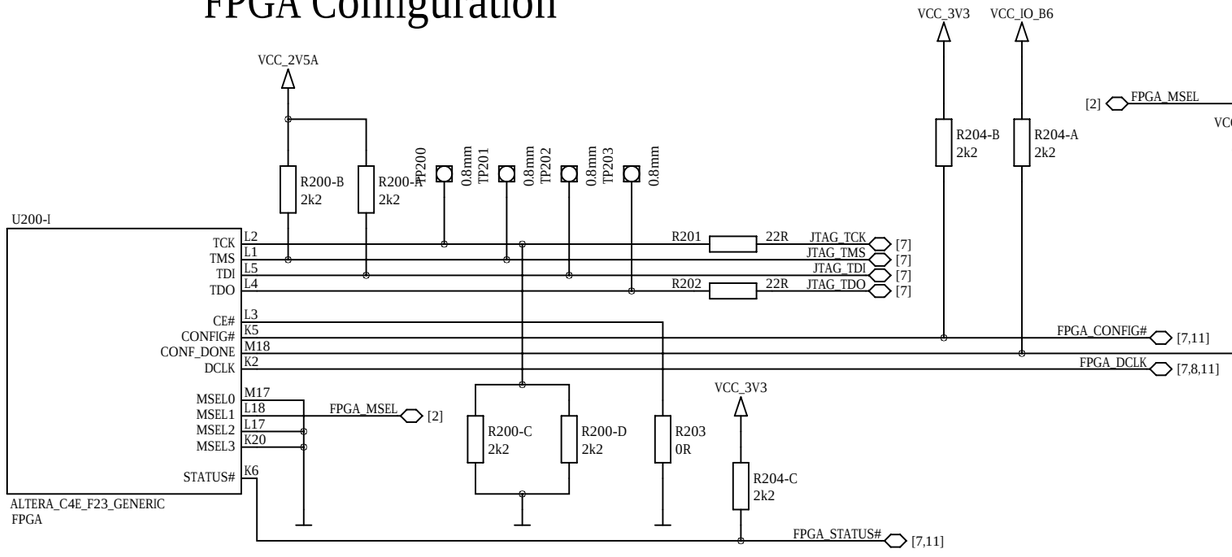

FPGA Mode

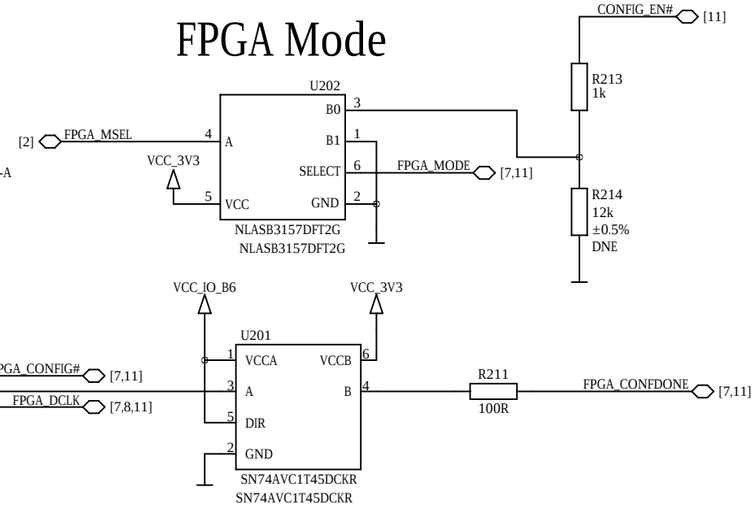

FPGA_MODE	Configuration Mode
0	Active Serial
1	Passive Serial

ENCLUSTRA	Copyright	© 2021 by Enclustra GmbH	Sheet Name	2_FPGA_BANK1_2_CONFIG	Customer No	0000	Revision	R6.1	DNE = do not equip	Confidential
	Company	Enclustra GmbH	Project	Mercury CA1	Project No	421	Designed	MHEI	Date 13 Apr 2021	Sheet/sheets 2 / 15

FPGA Bank 3

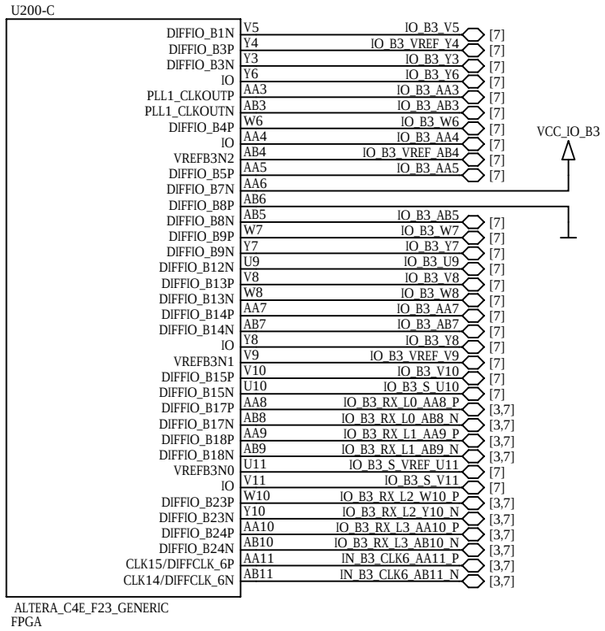

FPGA Bank 4

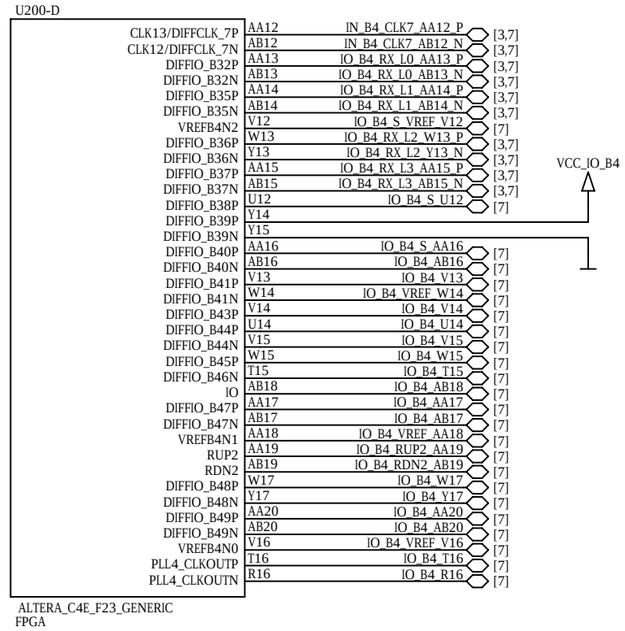

FPGA Bank 5

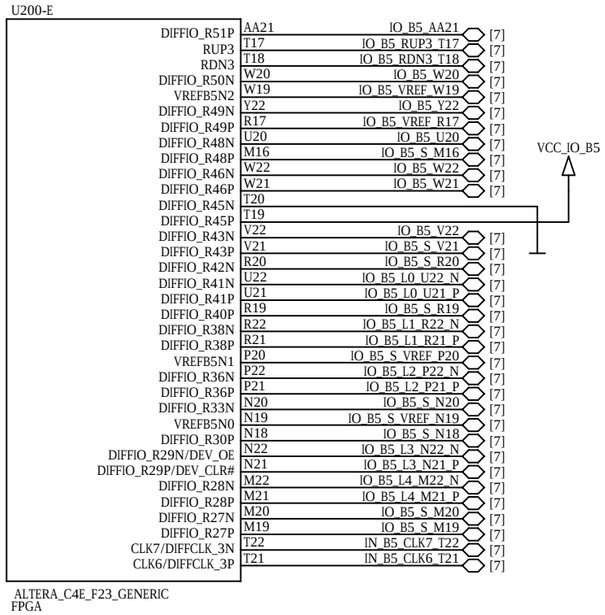

Some IO-Pins are connected to VCCIO or GND to support migration between different FPGA devices.

Differential Input Termination

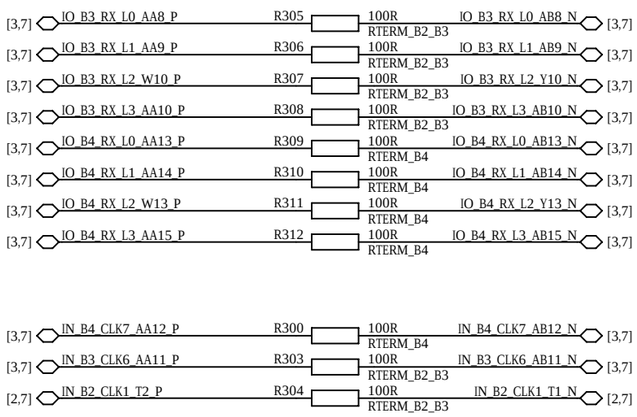

FPGA Bank 6

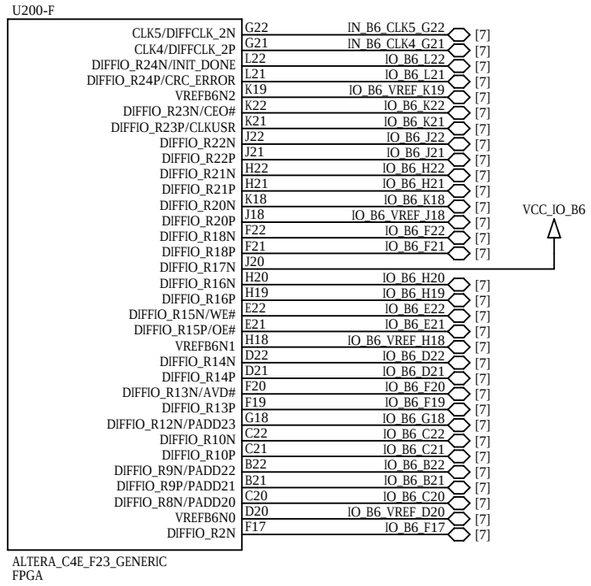

FPGA Bank 7

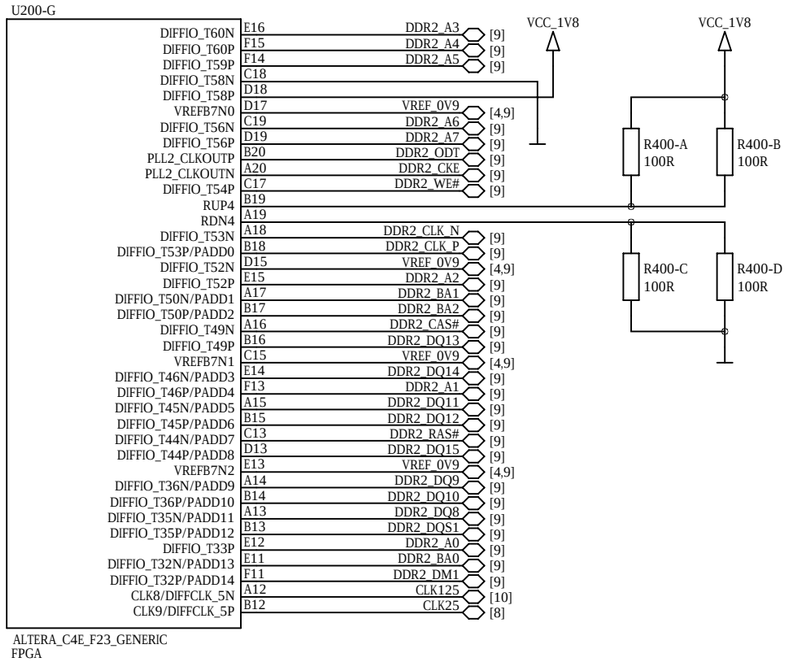

Some IO-Pins are connected to VCCIO or GND to support migration between different FPGA devices.

FPGA Bank 8

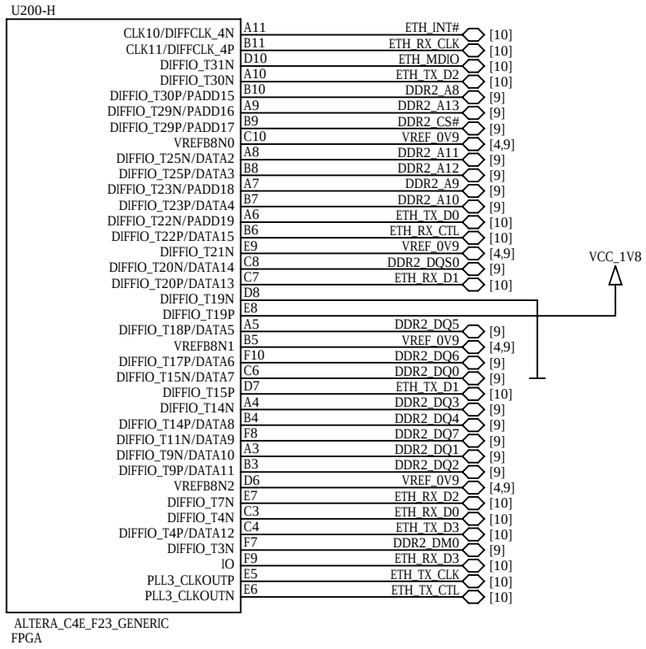

FPGA Power

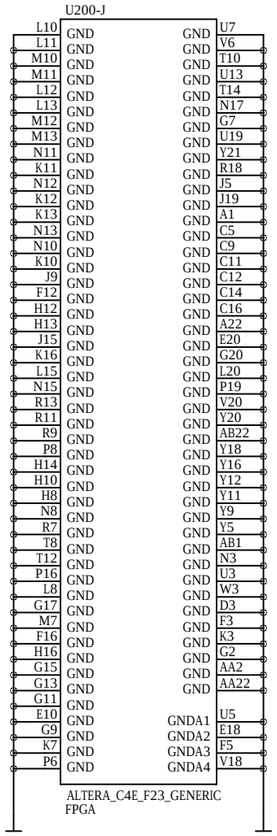

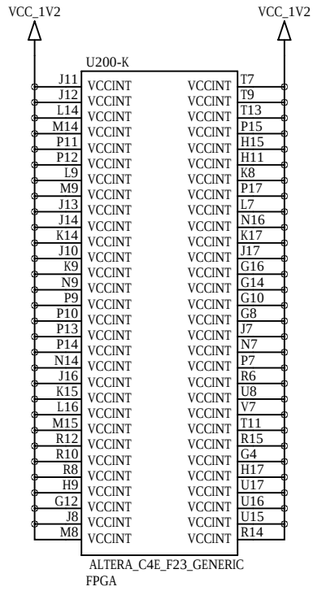

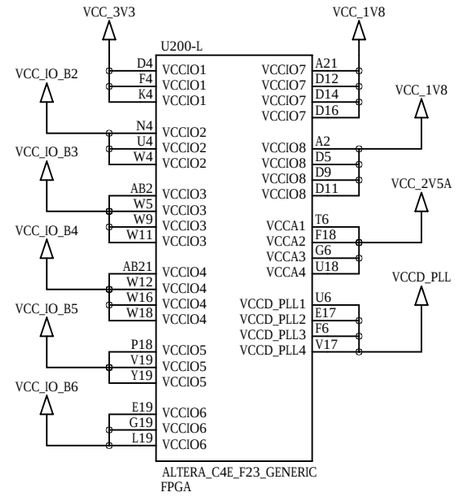

FPGA Analog Power Filters

not included in user schematics

This part is intentionally left blank.

FPGA Decoupling

not included in user schematics

This part is intentionally left blank.

Module Connectors

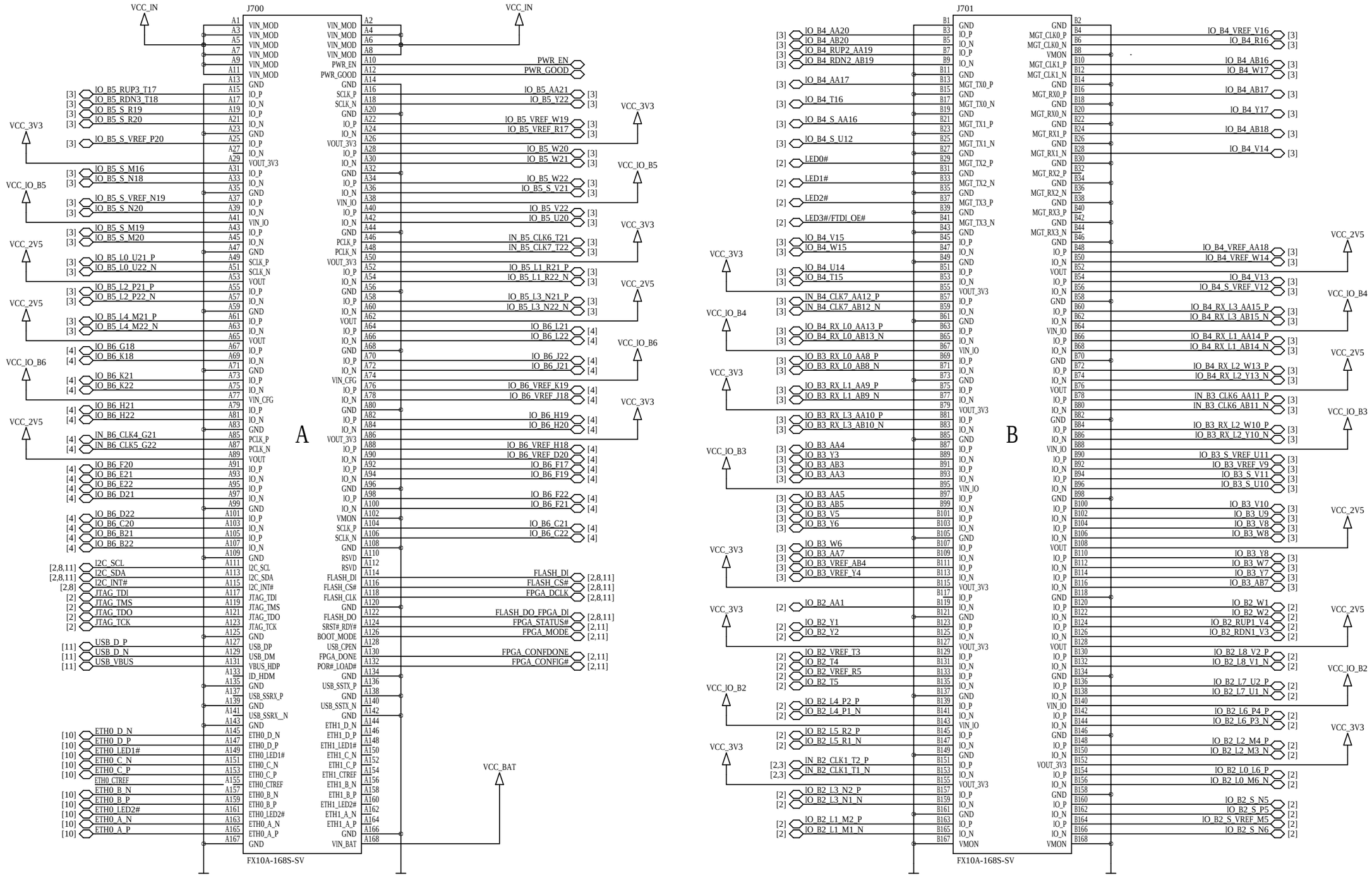

ENCLUSTRA	Copyright © 2021 by Enclustra GmbH	Sheet Name 7_MODULE_CONNECTORS	Customer No 0000	Revision R6.1	DNE = do not equip	Confidential
	Company Enclustra GmbH	Project Mercury CA1	Project No 421	Designed MHEI	Date 13 Apr 2021	Sheet/sheets 7 / 15

Real-time Clock

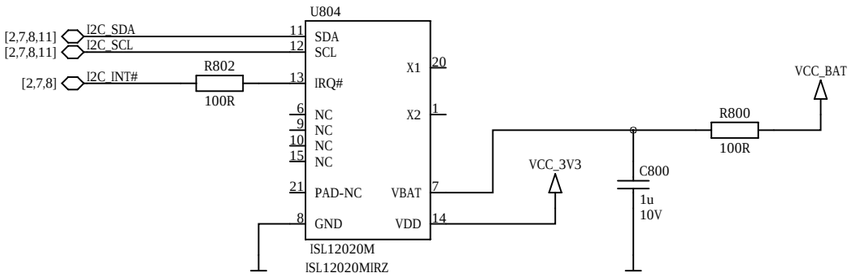

I2C Address

RTC registers: 1 1 0 1 1 1 1 Rw

User SRAM: 1 0 1 0 1 1 1 Rw

Secure EEPROMs

for Enclustra use only

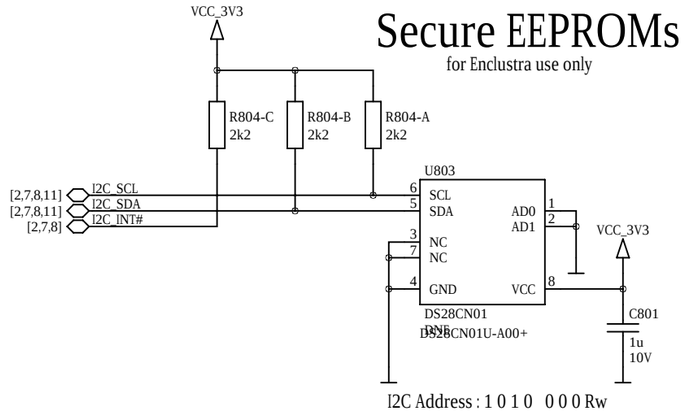

I2C Address : 1 0 1 0 0 0 0 Rw

I2C Address: 1 1 0 0 1 0 0 Rw

SPI Flash

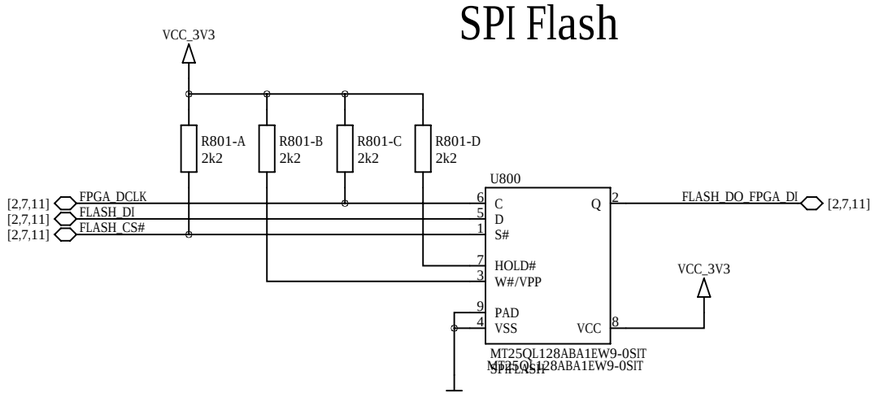

50 MHz Oscillator

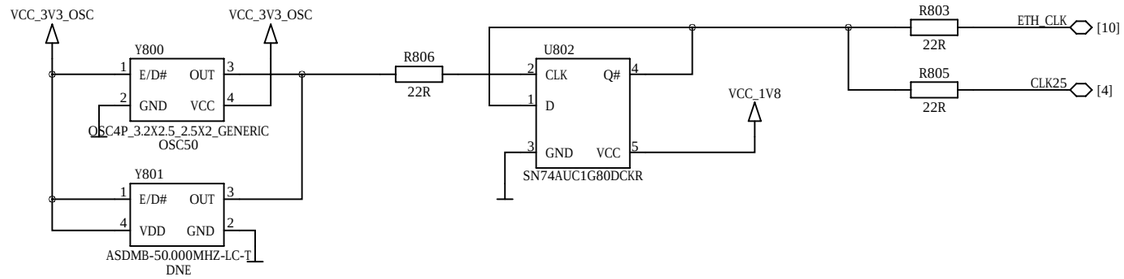

Clock Divider

Oscillator Power

not incuded in user schematics

This part is intentionally left blank.

ENCLUSTRA	Copyright	© 2021 by Enclustra GmbH	Sheet Name	8_RTC/EEPROM/FLASH/OSCILLATOR	Customer No	0000	Revision	R6.1	DNE = do not equip	Confidential
	Company	Enclustra GmbH	Project	Mercury CA1	Project No	421	Designed	MHEI	Date 13 Apr 2021	Sheet/sheets 8 / 15

DDR2 SDRAM

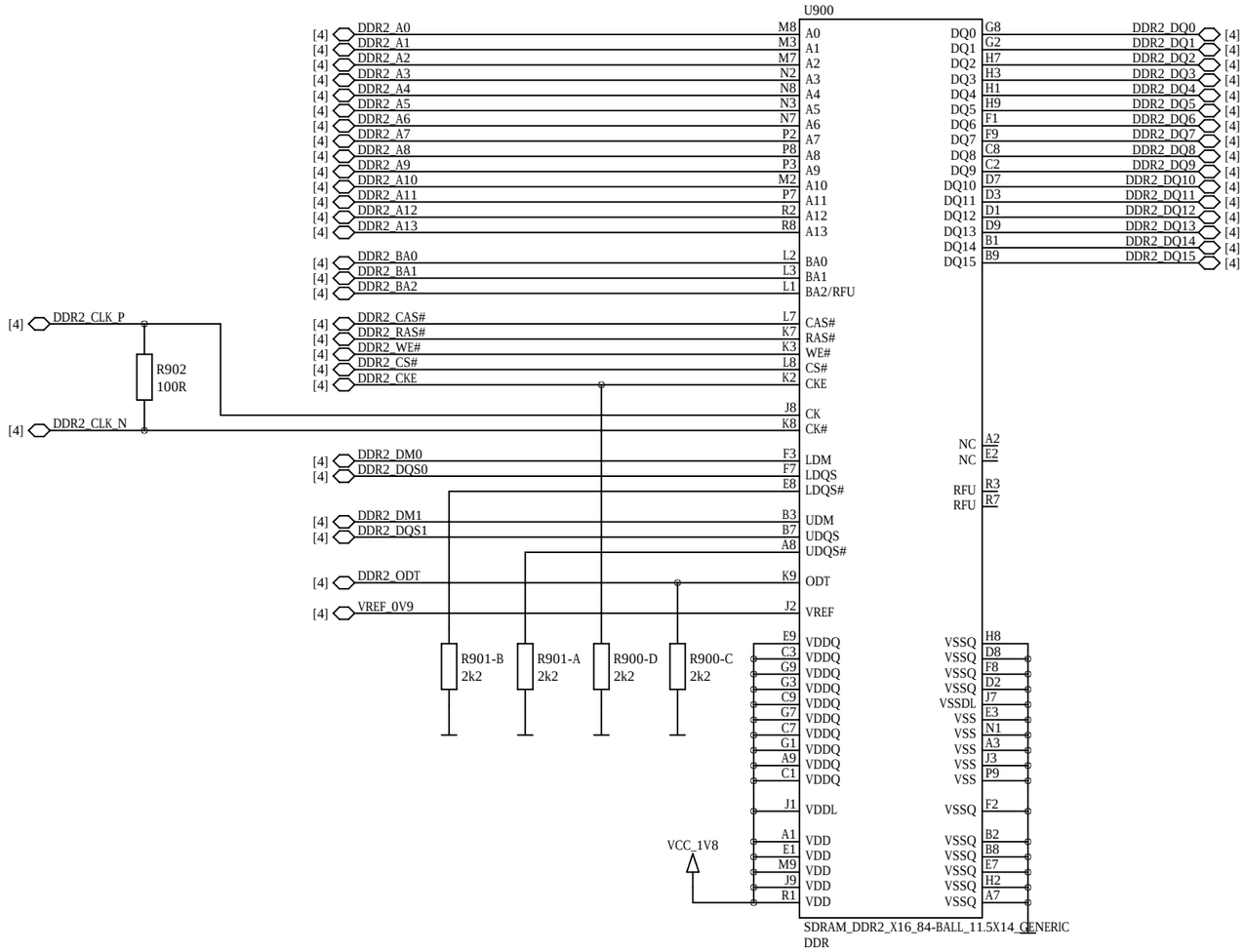

DDR2 VREF Generation

not incuded in user schematics

This part is intentionally left blank.

DDR2 SDRAM Decoupling

not incuded in user schematics

This part is intentionally left blank.

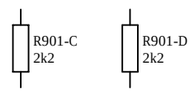

ENCLUSTRA	Copyright	© 2021 by Enclustra GmbH	Sheet Name	9_DDR2_SDRAM	Customer No	0000	Revision	R6.1	DNE = do not equip	Confidential
	Company	Enclustra GmbH	Project	Mercury CA1	Project No	421	Designed	MHEI	Date 13 Apr 2021	Sheet/sheets 9 / 15

Gigabit Ethernet PHY

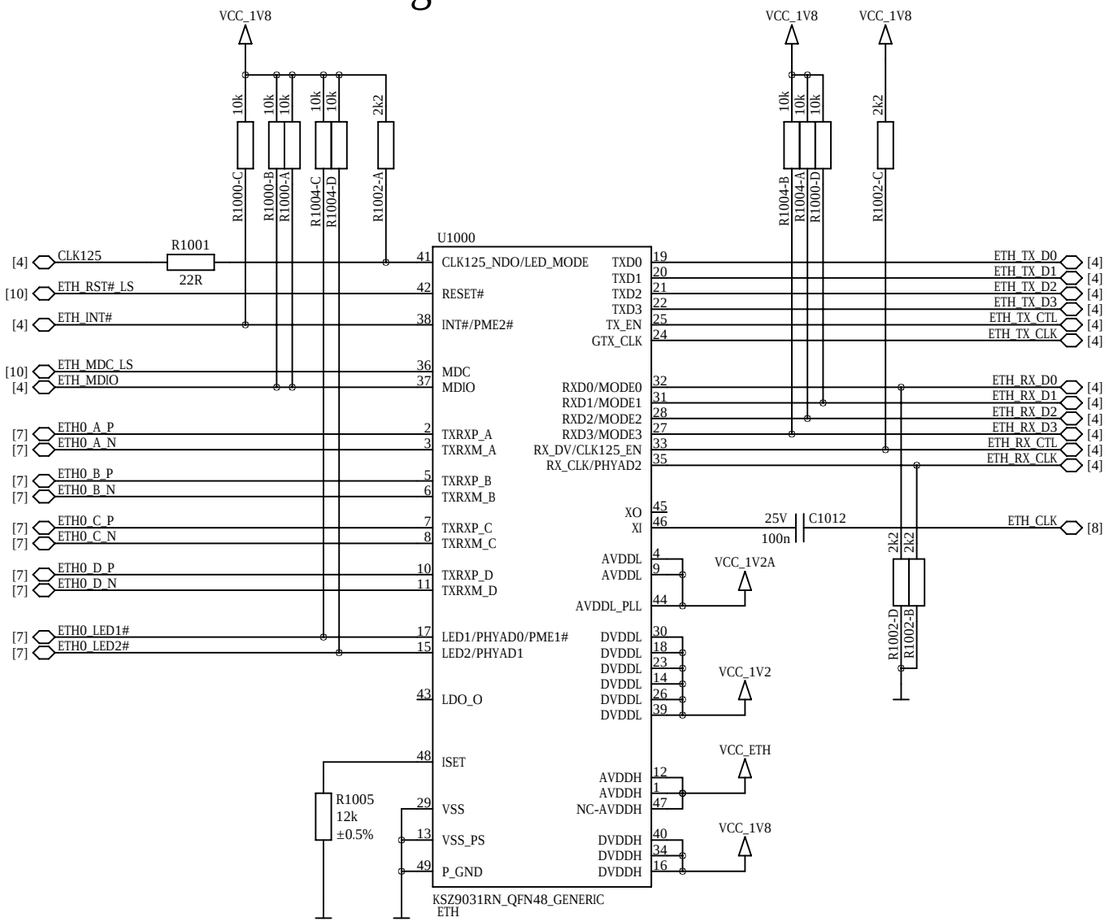

MODE<3:0> = 1110 -> RGMII, all capabilities
LED_Mode Pull up = Single LED
PhyAddress <2:0> = 011 -> 3
LED1 and LED2 are active low

Gigabit Ethernet Level Shifter

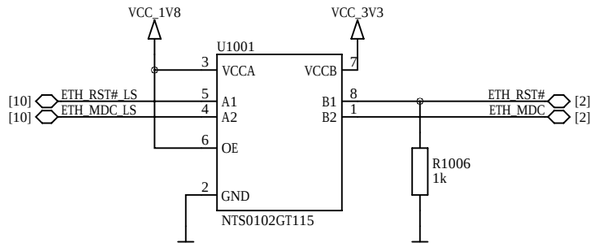

Ethernet Supply Filter

not included in user schematics

This part is intentionally left blank.

Gigabit Ethernet Power

not included in user schematics

This part is intentionally left blank.

ENCLUSTRA	Copyright	© 2021 by Enclustra GmbH	Sheet Name	10_ETHERNET_PHY	Customer No	0000	Revision	R6.1	DNE = do not equip	Confidential
	Company	Enclustra GmbH	Project	Mercury CA1	Project No	421	Designed	MHEI	Date 13 Apr 2021	Sheet/sheets 10 / 15

FTDI USB

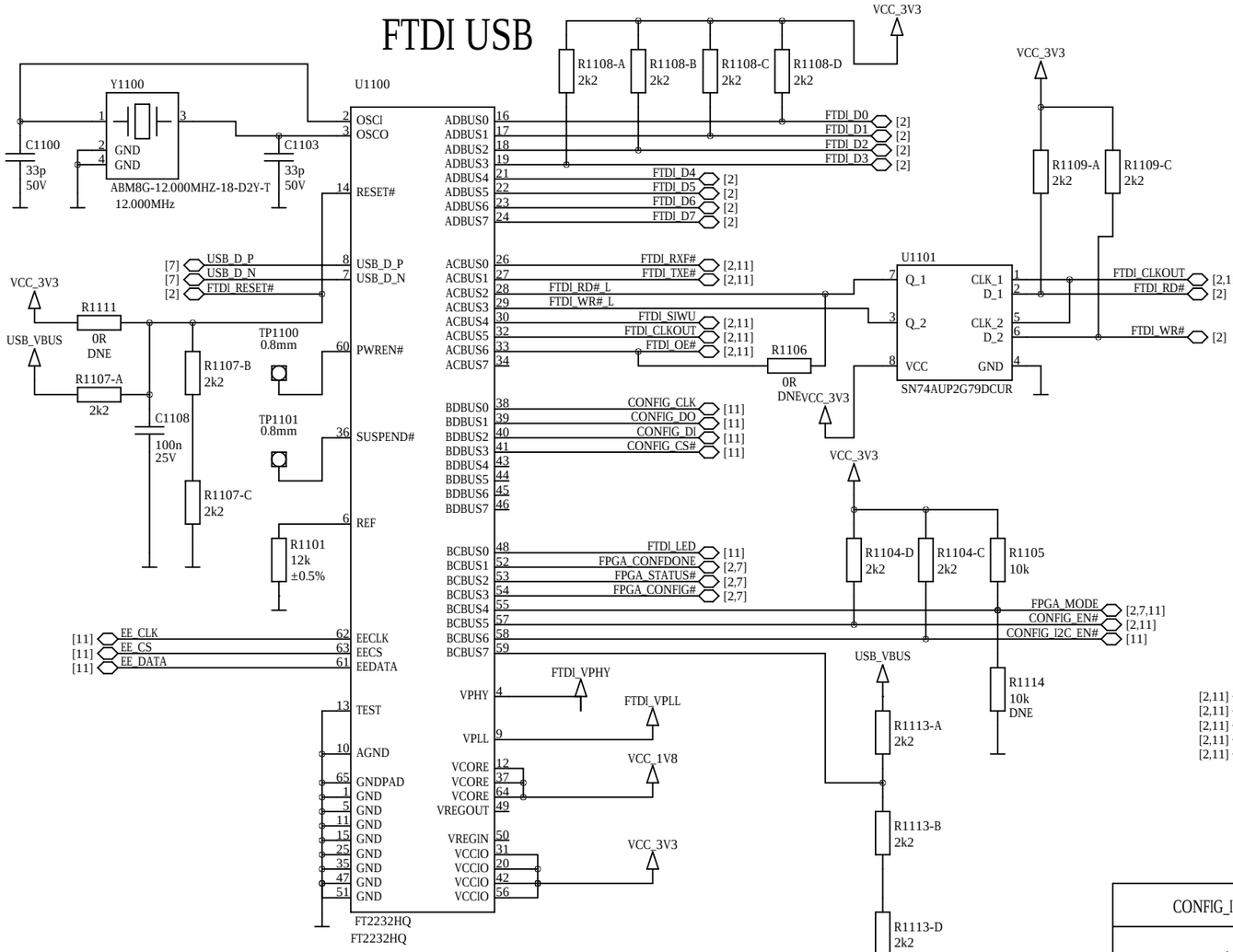

FTDI EEPROM

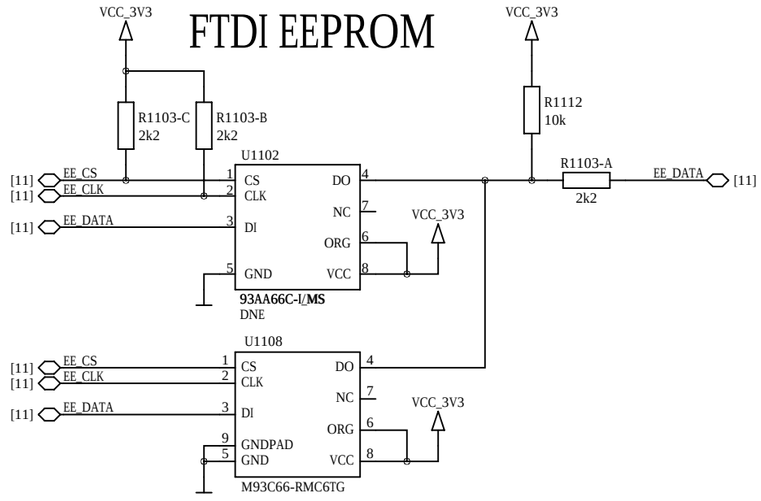

Configuration Multiplexers

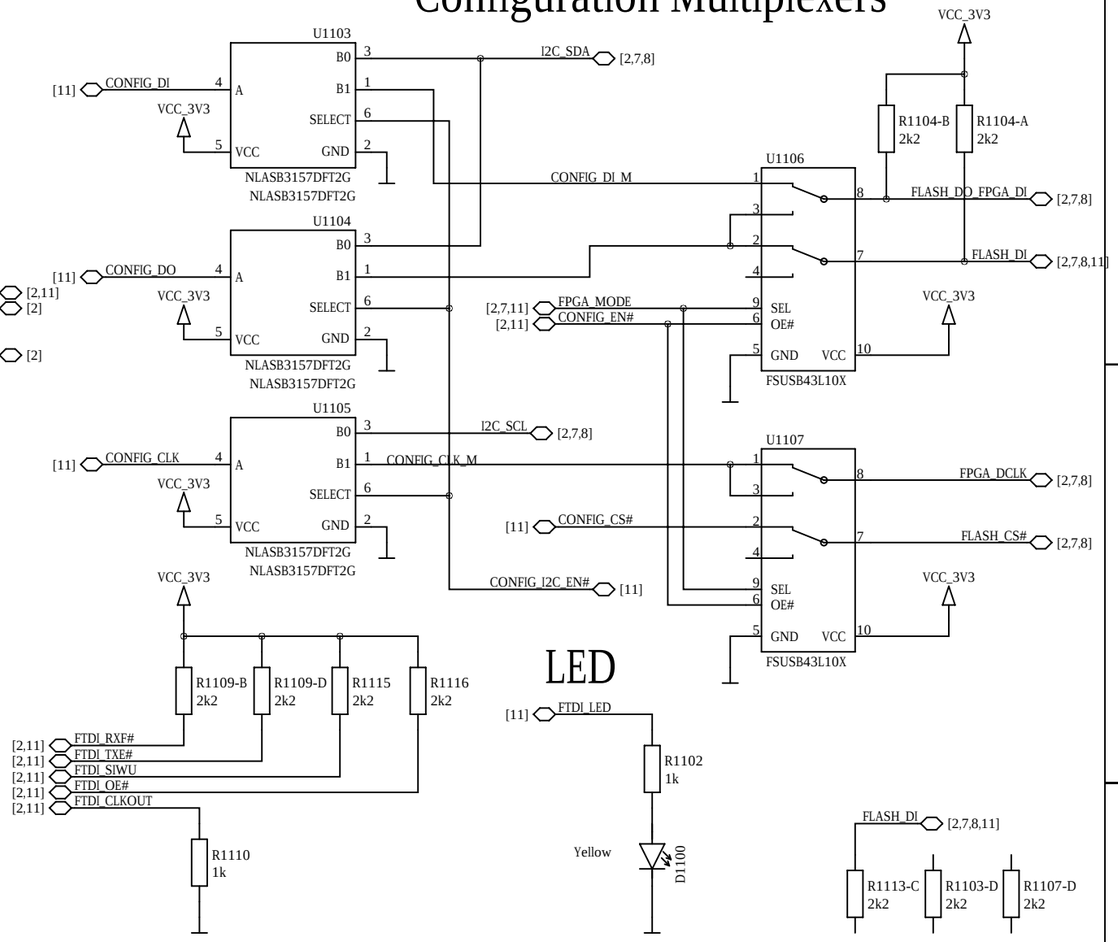

LED

CONFIG_I2C_EN#	CONFIG_EN#	FPGA_MODE	FPGA_CONFIG#	Configuration
0	X (1)	X	X (1)	I2C-Bus
1	0	0	0	Flash (Prog. Flash)
1	0	1	Z (1)	Passive Serial (Config from Carrier)
X	1	0	Z (1)	Active Serial (Config from Flash)

The FPGA can not be configured by USB if pin FPGA-MODE is connected to ground on the carrier board.

FTDI Power Filters

not incuded in user schematics

This part is intentionally left blank.

ENCLUSTRA	Copyright	© 2021 by Enclustra GmbH	Sheet Name	11_FTDI_USB/CONFIGURATION_MUXS	Customer No	0000	Revision	R6.1	DNE = do not equip	Confidential
	Company	Enclustra GmbH	Project	Mercury CA1	Project No	421	Designed	MHEI	Date 13 Apr 2021	Sheet/sheets 11 / 15

DC/DC Converter 3.3V 9A 5%

not included in user schematics

This part is intentionally left blank.

DC/DC Converter 1.2V 9A 5%

not included in user schematics

This part is intentionally left blank.

Input Power Filter

not included in user schematics

This part is intentionally left blank.

Current and Power Monitor

optional
not included in user schematics

This part is intentionally left blank.

Dual DC/DC Converter

channel 1: 2.5V 2A 5%
channel 2: 1.8V 2A 5%
not included in user schematics

This part is intentionally left blank.

Supported Voltage Ranges

Power Rail	Direction	Range	Tolerance
VCC_IN	input	5.0V - 15.0V	±5%
VCC_IO_B2	input	1.2V - 3.3V	±5%
VCC_IO_B3	input	1.2V - 3.3V	±5%
VCC_IO_B4	input	1.2V - 3.3V	±5%
VCC_IO_B5	input	1.2V - 3.3V	±5%
VCC_IO_B6	input	1.2V - 3.3V	±5%
VCC_BAT	input	2.0V - 3.6V	-
VCC_3V3	output	3.3V	±5%
VCC_2V5	output	2.5V	±5%

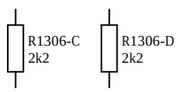

Fiducials

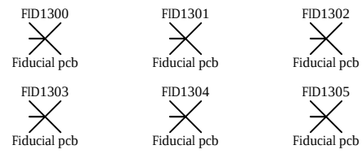

Panel Fiducials

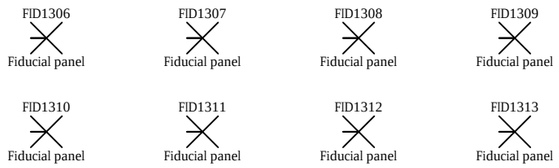

PCB

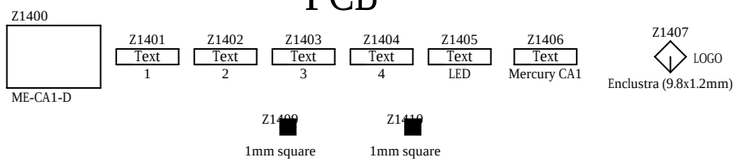

Mounting Holes (3.2mm)

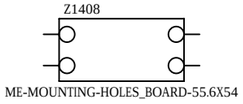

ENCLUSTRA	Copyright © 2021 by Enclustra GmbH	Sheet Name 14_MECHANICS	Customer No 0000	Revision R6.1	DNE = do not equip	Confidential	
	Company Enclustra GmbH	Project Mercury CA1	Project No 421	Designed MHEI	Date 13 Apr 2021	Sheet/sheets 14 / 15	

Assembly Variants

FPGA	DDR	ETH	OSC50	RTERM_B2_B3	RTERM_B4	SPIFLASH
Part U200A EP4CE30F23C8N EN100555	Part U900A NT5TU64M16HG-AC EN101275	Part U1000A KSZ9031RNXIA EN101934	Part Y800A ASEMB_50.000MHZ-LC-T EN100288	R303 - R308	R300, R309 - R312	U800
Part U200B EP4CE75F23C8N EN100554	Part U900B NT5TU64M16HG-ACI EN101276	Part U1000B KSZ9031RNXCA EN100202	Part Y800B QX333A50.00000B15R EN101236			
Part U200C EP4CE115F23C8N EN100553	Part U900C IM2G16D2DBBG-25 EN101303					
Part U200D EP4CE115F23I7N EN101274	Part U900D IM2G16D2DBBG-25I EN101304					

Assembly Variant	FPGA	DDR	ETH	OSC50	RTERM_B2_B3	RTERM_B4	SPIFLASH
Variant EN102569:0 ME-CA1-30-8C-D7-R6.1	Option EN102569:1 FPGA EN100555	Option EN102569:2 DDR EN101275	Option EN102569:3 ETH EN101934	Option EN102569:4 OSC50 EN100288	Option EN102569:5 RTERM_B2_B3	Option EN102569:6 RTERM_B4	Option EN102569:7 SPIFLASH
Variant EN102570:0 ME-CA1-30-8C-D7-X2-R6.1 EN102570	Option EN102570:1 FPGA EN100555	Option EN102570:2 DDR EN101275	Option EN102570:3 ETH EN101934	Option EN102570:4 OSC50 EN101236	Option EN102570:5 RTERM_B2_B3 DNE	Option EN102570:6 RTERM_B4 DNE	Option EN102570:7 SPIFLASH
Variant EN102571:0 ME-CA1-75-8C-D7-R6.1	Option EN102571:1 FPGA EN100554	Option EN102571:2 DDR EN101275	Option EN102571:3 ETH EN101934	Option EN102571:4 OSC50 EN100288	Option EN102571:5 RTERM_B2_B3	Option EN102571:6 RTERM_B4	Option EN102571:7 SPIFLASH
Variant EN102572:0 ME-CA1-115-8C-D8-R6.1	Option EN102572:1 FPGA EN100553	Option EN102572:2 DDR EN101303	Option EN102572:3 ETH EN101934	Option EN102572:4 OSC50 EN100288	Option EN102572:5 RTERM_B2_B3	Option EN102572:6 RTERM_B4	Option EN102572:7 SPIFLASH
Variant EN102573:0 ME-CA1-115-7I-D8-R6.1	Option EN102573:1 FPGA EN101274	Option EN102573:2 DDR EN101304	Option EN102573:3 ETH EN101934	Option EN102573:4 OSC50 EN100288	Option EN102573:5 RTERM_B2_B3	Option EN102573:6 RTERM_B4	Option EN102573:7 SPIFLASH
Variant EN102574:0 ME-CA1-115-8C-D8-NEF-X1-R6.1	Option EN102574:1 FPGA EN101274	Option EN102574:2 DDR EN101303	Option EN102574:3 ETH DNE	Option EN102574:4 OSC50 EN100288	Option EN102574:5 RTERM_B2_B3	Option EN102574:6 RTERM_B4 DNE	Option EN102574:7 SPIFLASH DNE