Enclustra User Schematics

Mercury KX1 Revision 5.0

Disclaimer

User schematics do not include proprietary Enclustra design elements, such as power supply circuits.
These circuits use optimized designs which are extremely compact and remain proprietary to Enclustra.
The user manual provides all necessary information to use the module and its interfaces.

User schematics are provided after purchase of Enclustra hardware, and may also be provided in certain cases before purchase, to assist in product evaluation.
No part of the schematics may be copied or modified without written permission from Enclustra.

Full schematics, including a full bill-of-materials, may be available through the purchase of a hardware licence for the product in question.
Please contact Enclustra Sales for more information.

Note: DNE = Do Not Equip (parts not equipped by default)

© Enclustra GmbH

Mercury KX1 FPGA Module

Revision 5.0

Sheet 1: Cover
Sheet 2: FPGA Bank 0/12/13/14
Sheet 3: FPGA Bank 15/16/32/33
Sheet 4: FPGA Bank 34/MGT
Sheet 5: FPGA Power / Analog Reference
Sheet 6: FPGA Decoupling
Sheet 7: Module Connector
Sheet 8: Real-time Clock/EEPROM/FLASH/Oscillator
Sheet 9: DDR3 SDRAM Channel A
Sheet 10: DDR3 SDRAM Channel B (lower bits)
Sheet 11: DDR3 SDRAM Channel B (upper bits)
Sheet 12: Gigabit Ethernet PHY 0
Sheet 13: Gigabit Ethernet PHY 1
Sheet 14: Rechargeable Battery/User LEDs
Sheet 15: USB 3.0 Controller (EZ-USB FX3)
Sheet 16: USB 3.0 Controller / Peripherals
Sheet 17: Power 3.3V / 1.0V
Sheet 18: Power 1.2V / 1.8V / 2.0V
Sheet 19: Power DDR3L / 2.5V / VTT
Sheet 20: Mechanics
Sheet 21: Assembly Variants

FPGA Bank 12

VCCO = VCC_IO_B12

Bank is not available in XC7K70T

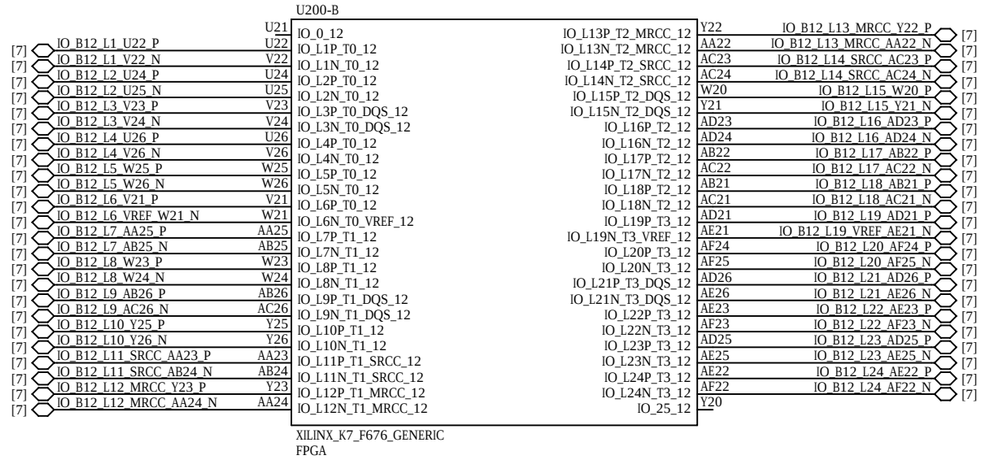

FPGA Bank 13

VCCO = VCC_CFG_B13

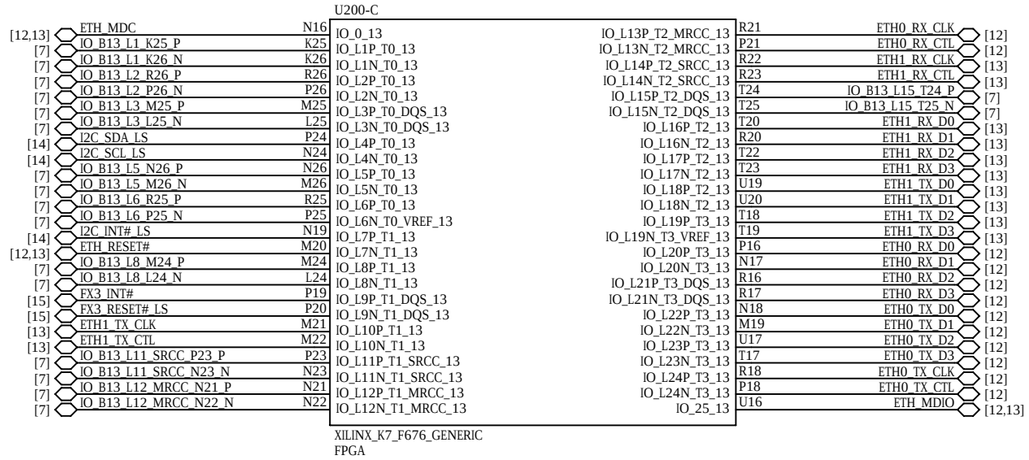

FPGA Bank 0

VCCO = VCC_CFG_B13

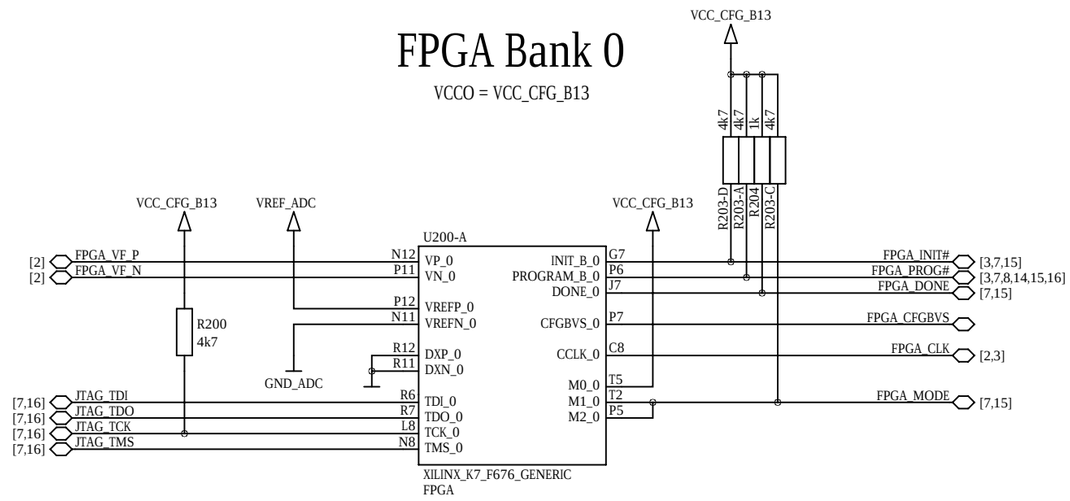

TDI and TMS have internal pullups.

FPGA Bank 14

VCCO = VCC_CFG_B13

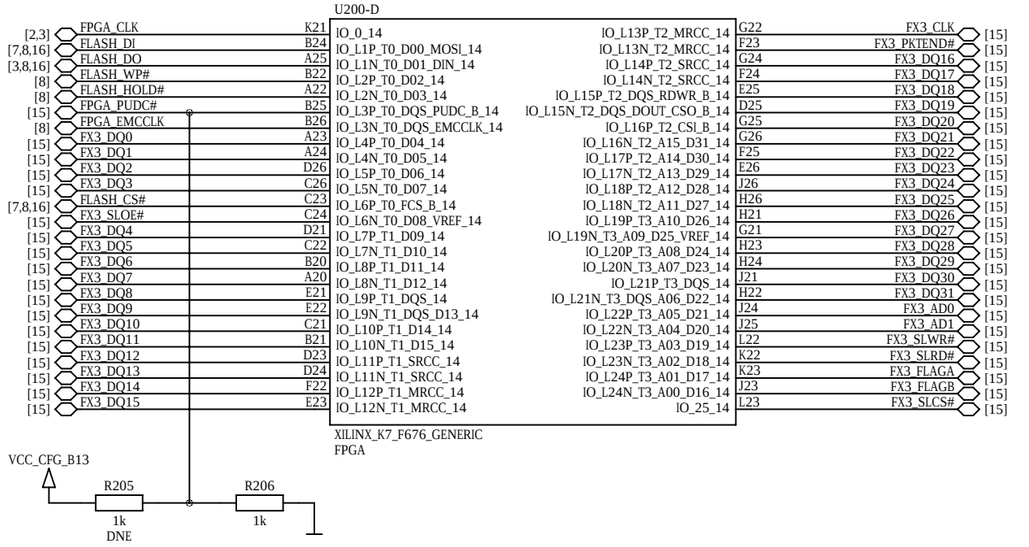

ADC Anti-Alias Filter

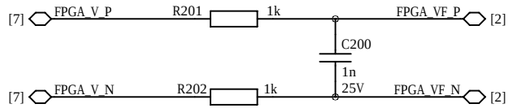

FPGA Mode

		Configuration
Default	0	Active Serial
	1	Passive Serial

FPGA Bank 15

U200-E — VCCO = VCC_IO_B15

[3]	ETH1_LED2#_R	K15	IO_0_15	IO_L13P_T2_MRCC_15	E18	IO_B15_L13_MRCC_E18_P	[7]
[7]	IO_B15_L1_AD0_C16_P	C16	IO_L1P_T0_AD0P_15	IO_L13N_T2_MRCC_15	D18	IO_B15_L13_MRCC_D18_N	[7]
[7]	IO_B15_L1_AD0_B16_N	B16	IO_L1N_T0_AD0N_15	IO_L14P_T2_SRCC_15	H17	IO_B15_L14_SRCC_H17_P	[7]
[7]	IO_B15_L2_AD8_A18_P	A18	IO_L2P_T0_AD8P_15	IO_L14N_T2_SRCC_15	H18	IO_B15_L14_SRCC_H18_N	[7]
[7]	IO_B15_L2_AD8_A19_N	A19	IO_L2N_T0_AD8N_15	IO_L15P_T2_DQS_15	D19	IO_B15_L15_D19_P	[7]
[7]	IO_B15_L3_AD1_B17_P	B17	IO_L3P_T0_DQS_AD1P_15	IO_L15N_T2_DQS_ADV_B_15	D20	IO_B15_L15_D20_N	[7]
[7]	IO_B15_L3_AD1_A17_N	A17	IO_L3N_T0_DQS_AD1N_15	IO_L16P_T2_A28_15	G19	IO_B15_L16_A28_G19_P	[7]
[7]	IO_B15_L4_AD9_C19_P	C19	IO_L4P_T0_AD9P_15	IO_L16N_T2_A27_15	F20	IO_B15_L16_A27_F20_N	[7]
[7]	IO_B15_L4_AD9_B19_N	B19	IO_L4N_T0_AD9N_15	IO_L17P_T2_A26_15	F19	IO_B15_L17_A26_F19_P	[7]
[7]	IO_B15_L5_AD2_C17_P	C17	IO_L5P_T0_AD2P_15	IO_L17N_T2_A25_15	E20	IO_B15_L17_A25_E20_N	[7]
[7]	IO_B15_L5_AD2_C18_N	C18	IO_L5N_T0_AD2N_15	IO_L18P_T2_A24_15	H19	IO_B15_L18_A24_H19_P	[7]
[7]	IO_B15_L6_D15_P	D15	IO_L6P_T0_15	IO_L18N_T2_A23_15	G20	IO_B15_L18_A23_G20_N	[7]
[7]	IO_B15_L6_VREF_D16_N	D16	IO_L6N_T0_VREF_15	IO_L19P_T3_A22_15	K20	IO_B15_L19_A22_K20_P	[7]
[7]	IO_B15_L7_AD10_H16_P	H16	IO_L7P_T1_AD10P_15	IO_L19N_T3_A21_VREF_15	J20	IO_B15_L19_A21_VREF_J20_N	[7]
[7]	IO_B15_L7_AD10_G16_N	G16	IO_L7N_T1_AD10N_15	IO_L20P_T3_A20_15	J18	IO_B15_L20_A20_J18_P	[7]
[7]	IO_B15_L8_AD3_G15_P	G15	IO_L8P_T1_AD3P_15	IO_L20N_T3_A19_15	J19	IO_B15_L20_A19_J19_N	[7]
[7]	IO_B15_L8_AD3_F15_N	F15	IO_L8N_T1_AD3N_15	IO_L21P_T3_DQS_15	L19	IO_B15_L21_L19_P	[7]
[7]	IO_B15_L9_AD11_J15_P	J15	IO_L9P_T1_DQS_AD11P_15	IO_L21N_T3_DQS_A18_15	L20	IO_B15_L21_A18_L20_N	[7]
[7]	IO_B15_L9_AD11_J16_N	J16	IO_L9N_T1_DQS_AD11N_15	IO_L22P_T3_A17_15	K16	IO_B15_L22_A17_K16_P	[7]
[7]	IO_B15_L10_AD4_E15_P	E15	IO_L10P_T1_AD4P_15	IO_L22N_T3_A16_15	K17	IO_B15_L22_A16_K17_N	[7]
[7]	IO_B15_L10_AD4_E16_N	E16	IO_L10N_T1_AD4N_15	IO_L23P_T3_FOE_B_15	M17	LED0#	[14]
[7]	IO_B15_L11_SRCC_AD12_G17_P	G17	IO_L11P_T1_SRCC_AD12P_15	IO_L23N_T3_FWE_B_15	L18	LED1#	[14]
[7]	IO_B15_L11_SRCC_AD12_F18_N	F18	IO_L11N_T1_SRCC_AD12N_15	IO_L24P_T3_RS1_15	L17	LED2#	[14]
[7]	IO_B15_L12_MRCC_AD5_F17_P	F17	IO_L12P_T1_MRCC_AD5P_15	IO_L24N_T3_RS0_15	K18	LED3#	[14]
[7]	IO_B15_L12_MRCC_AD5_E17_N	E17	IO_L12N_T1_MRCC_AD5N_15	IO_25_15	M16	ETH0_LED2#_R	[3]

XILINX_K7_F676_GENERIC
FPGA

FPGA Bank 16

U200-F — VCCO = VCC_IO_B16

	DDR3_VSEL	J8	IO_0_16	IO_L13P_T2_MRCC_16	C12	IO_B16_L13_MRCC_C12_P	[7]
[7]	IO_B16_L1_H9_P	H9	IO_L1P_T0_16	IO_L13N_T2_MRCC_16	C11	IO_B16_L13_MRCC_C11_N	[7]
[7]	IO_B16_L1_H8_N	H8	IO_L1N_T0_16	IO_L14P_T2_SRCC_16	E11	IO_B16_L14_SRCC_E11_P	[7]
[7]	IO_B16_L2_G10_P	G10	IO_L2P_T0_16	IO_L14N_T2_SRCC_16	D11	IO_B16_L14_SRCC_D11_N	[7]
[7]	IO_B16_L2_G9_N	G9	IO_L2N_T0_16	IO_L15P_T2_DQS_16	F14	IO_B16_L15_F14_P	[7]
[7]	IO_B16_L3_J13_P	J13	IO_L3P_T0_DQS_16	IO_L15N_T2_DQS_16	F13	IO_B16_L15_F13_N	[7]
[7]	IO_B16_L3_H13_N	H13	IO_L3N_T0_DQS_16	IO_L16P_T2_16	G12	IO_B16_L16_G12_P	[7]
[7]	IO_B16_L4_J11_P	J11	IO_L4P_T0_16	IO_L16N_T2_16	F12	IO_B16_L16_F12_N	[7]
[7]	IO_B16_L4_J10_N	J10	IO_L4N_T0_16	IO_L17P_T2_16	D14	IO_B16_L17_D14_P	[7]
[7]	IO_B16_L5_H14_P	H14	IO_L5P_T0_16	IO_L17N_T2_16	D13	IO_B16_L17_D13_N	[7]
[7]	IO_B16_L5_G14_N	G14	IO_L5N_T0_16	IO_L18P_T2_16	E13	IO_B16_L18_E13_P	[7]
[7]	IO_B16_L6_H12_P	H12	IO_L6P_T0_16	IO_L18N_T2_16	E12	IO_B16_L18_E12_N	[7]
[7]	IO_B16_L6_VREF_H11_N	H11	IO_L6N_T0_VREF_16	IO_L19P_T3_16	C14	IO_B16_L19_C14_P	[7]
[7]	IO_B16_L7_F9_P	F9	IO_L7P_T1_16	IO_L19N_T3_VREF_16	C13	IO_B16_L19_VREF_C13_N	[7]
[7]	IO_B16_L7_F8_N	F8	IO_L7N_T1_AD10N	IO_L20P_T3_16	B12	IO_B16_L20_B12_P	[7]
[7]	IO_B16_L8_D9_P	D9	IO_L8P_T1_16	IO_L20N_T3_16	B11	IO_B16_L20_B11_N	[7]
[7]	IO_B16_L8_D8_N	D8	IO_L8N_T1_16	IO_L21P_T3_DQS_16	B14	IO_B16_L21_B14_P	[7]
[7]	IO_B16_L9_A9_P	A9	IO_L9P_T1_DQS_16	IO_L21N_T3_DQS_16	A14	IO_B16_L21_A14_N	[7]
[7]	IO_B16_L9_A8_N	A8	IO_L9N_T1_DQS_16	IO_L22P_T3_16	B10	IO_B16_L22_B10_P	[7]
[7]	IO_B16_L10_C9_P	C9	IO_L10P_T1_16	IO_L22N_T3_16	A10	IO_B16_L22_A10_N	[7]
[7]	IO_B16_L10_B9_N	B9	IO_L10N_T1_16	IO_L23P_T3_16	B15	IO_B16_L23_B15_P	[7]
[7]	IO_B16_L11_SRCC_G11_P	G11	IO_L11P_T1_SRCC_16	IO_L23N_T3_16	A15	IO_B16_L23_A15_N	[7]
[7]	IO_B16_L11_SRCC_F10_N	F10	IO_L11N_T1_SRCC_16	IO_L24P_T3_16	A13	IO_B16_L24_A13_P	[7]
[7]	IO_B16_L12_MRCC_E10_P	E10	IO_L12P_T1_MRCC_16	IO_L24N_T3_16	A12	IO_B16_L24_A12_N	[7]
[7]	IO_B16_L12_MRCC_D10_N	D10	IO_L12N_T1_MRCC_16	IO_25_16	J14	FPGA_INIT#_R	[3]

XILINX_K7_F676_GENERIC
FPGA

FPGA Bank 32

VCCO = VCC_DDR3
Bank is not available in XC7K70T

U200-G

VCC_DDR3 — R300 80R6

R305 100R

		V13	IO_0_VRN_32	IO_L13P_T2_MRCC_32	AC18	CLK200_P	[8]
		AE17	IO_L1P_T0_32	IO_L13N_T2_MRCC_32	AD18	CLK200_N	[8]
		AF17	IO_L1N_T0_32	IO_L14P_T2_SRCC_32	AB17	DDR3B_ODT	[10,11]
		AF14	IO_L2P_T0_32	IO_L14N_T2_SRCC_32	AC17	DDR3B_CKE	[10,11]
		AF15	IO_L2N_T0_32	IO_L15P_T2_DQS_32	AD20	DDR3B_CLK_P	[10,11]
		AE18	IO_L3P_T0_DQS_32	IO_L15N_T2_DQS_32	AE20	DDR3B_CLK_N	[10,11]
		AF18	IO_L3N_T0_DQS_32	IO_L16P_T2_32	AA19	DDR3B_A0	[10,11]
		AD15	IO_L4P_T0_32	IO_L16N_T2_32	AA20	DDR3B_A1	[10,11]
		AE15	IO_L4N_T0_32	IO_L17P_T2_32	AC19	DDR3B_A2	[10,11]
		AF19	IO_L5P_T0_32	IO_L17N_T2_32	AD19	DDR3B_A3	[10,11]
		AF20	IO_L5N_T0_32	IO_L18P_T2_32	AB19	DDR3B_A4	[10,11]
		AD16	IO_L6P_T0_32	IO_L18N_T2_32	AB20	DDR3B_A5	[10,11]
		AE16	IO_L6N_T0_VREF_32	IO_L19P_T3_32	Y17	DDR3B_A6	[10,11]
		AA14	IO_L7P_T1_32	IO_L19N_T3_VREF_32	Y18		
		AA15	IO_L7N_T1_32	IO_L20P_T3_32	V16	DDR3B_A7	[10,11]
		AC14	IO_L8P_T1_32	IO_L20N_T3_32	V17	DDR3B_A8	[10,11]
		AD14	IO_L8N_T1_32	IO_L21P_T3_DQS_32	W18	DDR3B_A9	[10,11]
[10,11]	DDR3B_RESET#	Y15	IO_L9P_T1_DQS_32	IO_L21N_T3_DQS_32	W19	DDR3B_A10	[10,11]
[10,11]	DDR3B_CS#	Y16	IO_L9N_T1_DQS_32	IO_L22P_T3_32	W15	DDR3B_A11	[10,11]
[10,11]	DDR3B_BA0	AB14	IO_L10P_T1_32	IO_L22N_T3_32	W16	DDR3B_A12	[10,11]
[10,11]	DDR3B_BA1	AB15	IO_L10N_T1_32	IO_L23P_T3_32	V18	DDR3B_A13	[10,11]
[10,11]	DDR3B_BA2	AA17	IO_L11P_T1_SRCC_32	IO_L23N_T3_32	V19	DDR3B_A14	[10,11]
[10,11]	DDR3B_RAS#	AA18	IO_L11N_T1_SRCC_32	IO_L24P_T3_32	V14	DDR3B_A15	[10,11]
[10,11]	DDR3B_CAS#	AB16	IO_L12P_T1_MRCC_32	IO_L24N_T3_32	W14		
[10,11]	DDR3B_WE#	AC16	IO_L12N_T1_MRCC_32	IO_25_VRP_32	W13		

XILINX_K7_F676_GENERIC
FPGA

R304 80R6

FPGA Bank 33

VCCO = VCC_DDR3

U200-H

[3]	PWR_GOOD_R	U9	IO_0_VRN_33	IO_L13P_T2_MRCC_33	AB11	ETH1_INT#_R	[3]
[10]	DDR3B_DQ0	V11	IO_L1P_T0_33	IO_L13N_T2_MRCC_33	AC11	DDR3B_DQ17	[11]
[10]	DDR3B_DQ1	W11	IO_L1N_T0_33	IO_L14P_T2_SRCC_33	AA10	DDR3B_DQ18	[11]
[10]	DDR3B_DQ2	V8	IO_L2P_T0_33	IO_L14N_T2_SRCC_33	AB10	DDR3B_DQ19	[11]
[10]	DDR3B_DQ3	V7	IO_L2N_T0_33	IO_L15P_T2_DQS_33	AB12	DDR3B_DQS2_P	[11]
[10]	DDR3B_DQS0_P	W10	IO_L3P_T0_DQS_33	IO_L15N_T2_DQS_33	AC12	DDR3B_DQS2_N	[11]
[10]	DDR3B_DQS0_N	W9	IO_L3N_T0_DQS_33	IO_L16P_T2_33	AA13	DDR3B_DQ20	[11]
[10]	DDR3B_DQ4	Y8	IO_L4P_T0_33	IO_L16N_T2_33	AA12	DDR3B_DQ21	[11]
[10]	DDR3B_DQ5	Y7	IO_L4N_T0_33	IO_L17P_T2_33	AC13	DDR3B_DQ22	[11]
[10]	DDR3B_DQ6	Y11	IO_L5P_T0_33	IO_L17N_T2_33	AD13	DDR3B_DQ23	[11]
[10]	DDR3B_DQ7	Y10	IO_L5N_T0_33	IO_L18P_T2_33	Y13	DDR3B_DM2	[11]
[10]	DDR3B_DM0	V9	IO_L6P_T0_33	IO_L18N_T2_33	Y12	DDR3B_DQ16	[11]
		W8	IO_L6N_T0_VREF_33	IO_L19P_T3_33	AD11	DDR3B_DM3	[11]
[10]	DDR3B_DQ8	AE7	IO_L7P_T1_33	IO_L19N_T3_VREF_33	AE11		
[10]	DDR3B_DQ9	AF7	IO_L7N_T1_33	IO_L20P_T3_33	AD10	DDR3B_DQ24	[11]
[10]	DDR3B_DQ10	AA8	IO_L8P_T1_33	IO_L20N_T3_33	AE10	DDR3B_DQ25	[11]
[10]	DDR3B_DQ11	AA7	IO_L8N_T1_33	IO_L21P_T3_DQS_33	AE12	DDR3B_DQS3_P	[11]
[10]	DDR3B_DQS1_P	AC8	IO_L9P_T1_DQS_33	IO_L21N_T3_DQS_33	AF12	DDR3B_DQS3_N	[11]
[10]	DDR3B_DQS1_N	AD8	IO_L9N_T1_DQS_33	IO_L22P_T3_33	AE8	DDR3B_DQ26	[11]
[10]	DDR3B_DQ12	AB7	IO_L10P_T1_33	IO_L22N_T3_33	AF8	DDR3B_DQ27	[11]
[10]	DDR3B_DQ13	AC7	IO_L10N_T1_33	IO_L23P_T3_33	AE13	DDR3B_DQ28	[11]
[10]	DDR3B_DQ14	AA9	IO_L11P_T1_SRCC_33	IO_L23N_T3_33	AF13	DDR3B_DQ29	[11]
[10]	DDR3B_DQ15	AB9	IO_L11N_T1_SRCC_33	IO_L24P_T3_33	AF10	DDR3B_DQ30	[11]
[10]	DDR3B_DM1	AC9	IO_L12P_T1_MRCC_33	IO_L24N_T3_33	AF9	DDR3B_DQ31	[11]
		AD9	IO_L12N_T1_MRCC_33	IO_25_VRP_33	V12	ETH0_INT#_R	[3]

VREF_DDR3B

XILINX_K7_F676_GENERIC
FPGA

VREF DDR3-B

not included in user schematics

This part is intentionally left blank.

Series Resistors

[3]	ETH0_LED2#_R	R306	47k	ETH0_LED2#	[7,12]
[3]	ETH1_LED2#_R	R307	47k	ETH1_LED2#	[7,13]
[3]	ETH0_INT#_R	R308	47k	ETH0_INT#	[12]
[3]	ETH1_INT#_R	R309	47k	ETH1_INT#	[13]
[2,3,7,15]	FPGA_INIT#	R310	47k	FPGA_INIT#_R	[3]
[7,15]	PWR_GOOD	R311	47k	PWR_GOOD_R	[3]
[2,8,16]	FLASH_DO	R312	100R	FLASH_DO_FPGA_DIN	[7]
[7]	FLASH_CLK_FPGA_CCLK	R313	100R	FLASH_CLK	[8,16]
[2]	FPGA_CLK	R314	22R		

C303 — 12p 10V DNE

Power Sequencing

[2,3,7,15] FPGA_INIT# — D300 RB520CM-30T2R — FPGA_PROG# [2,7,8,14,15,16]

ENCLUSTRA	Copyright	© 2021 by Enclustra GmbH	Sheet Name	3_FPGA_BANK15_16_32_33	Customer No 0000	Revision R5.0	DNE = do not equip	Confidential
	Company	Enclustra GmbH	Project	Mercury KX1	Project No 434	Designed MHEI	Date 13 Apr 2021	Sheet/sheets 3 / 21

FPGA Bank 34

VCCO = VCC_DDR3

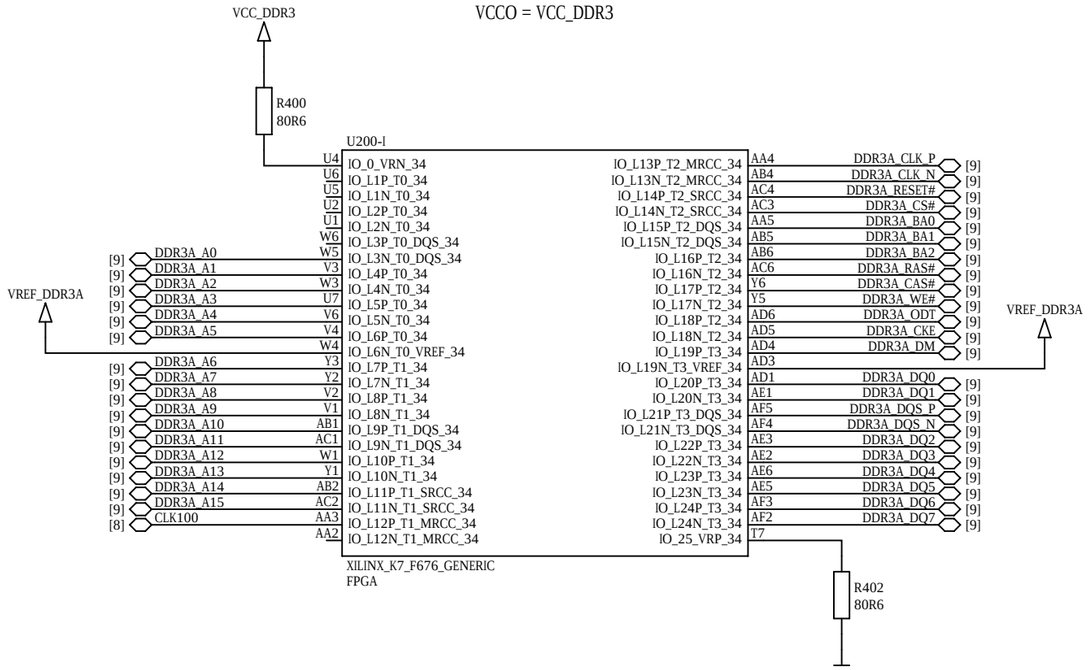

VREF DDR3-A

not included in user schematics

This part is intentionally left blank.

FPGA MGT Banks 115 / 116

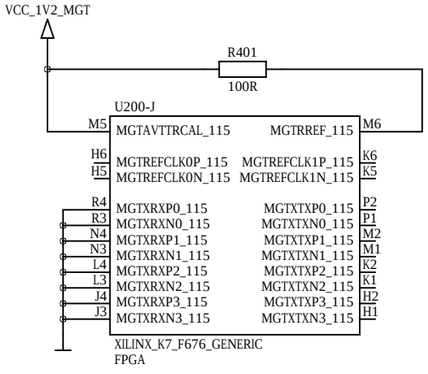

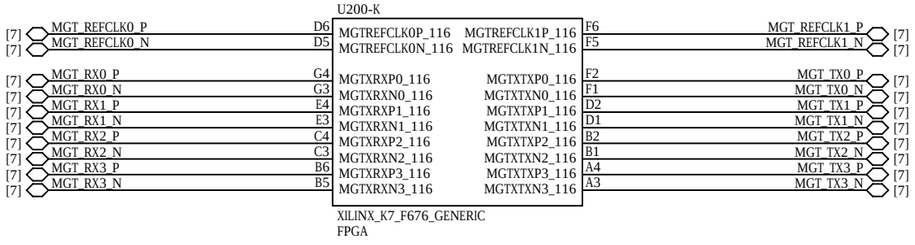

ENCLUSTRA	Copyright © 2021 by Enclustra GmbH	Sheet Name 4_FPGA_BANK34_MGT	Customer No 0000	Revision R5.0	DNE = do not equip	Confidential	
	Company Enclustra GmbH	Project Mercury KX1	Project No 434	Designed MHEI	Date 13 Apr 2021	Sheet/sheets 4 / 21	

FPGA Power

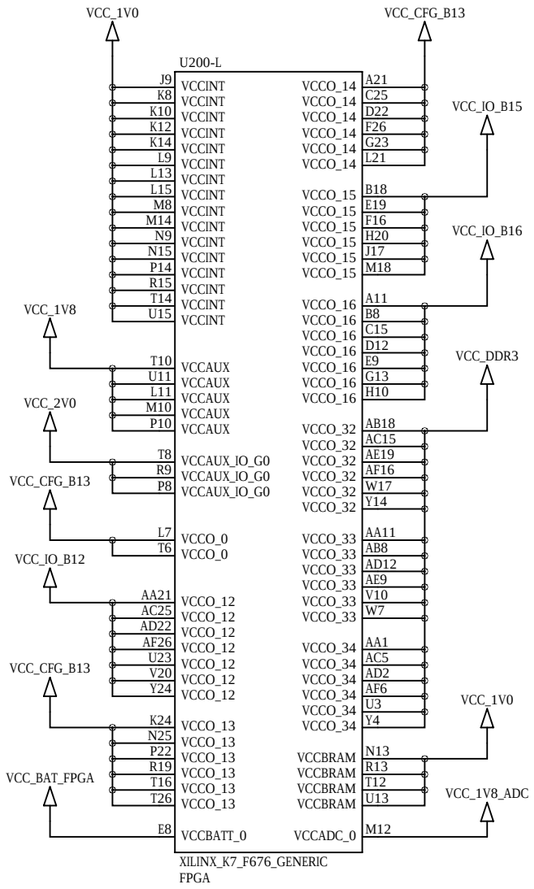

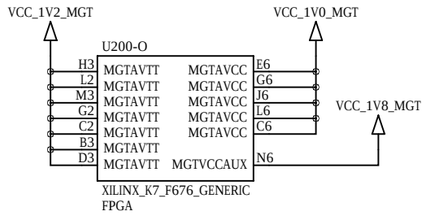

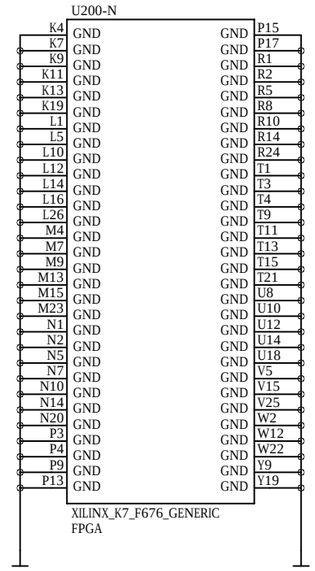

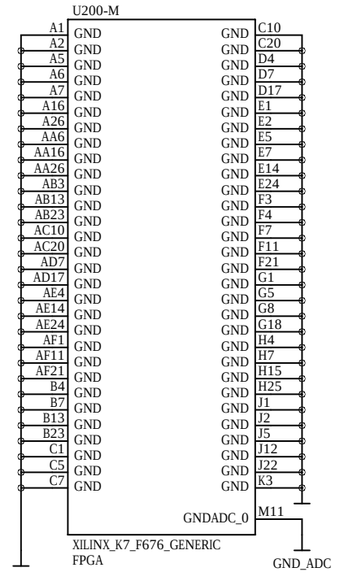

MGT Power Filters

not included in user schematics

This part is intentionally left blank.

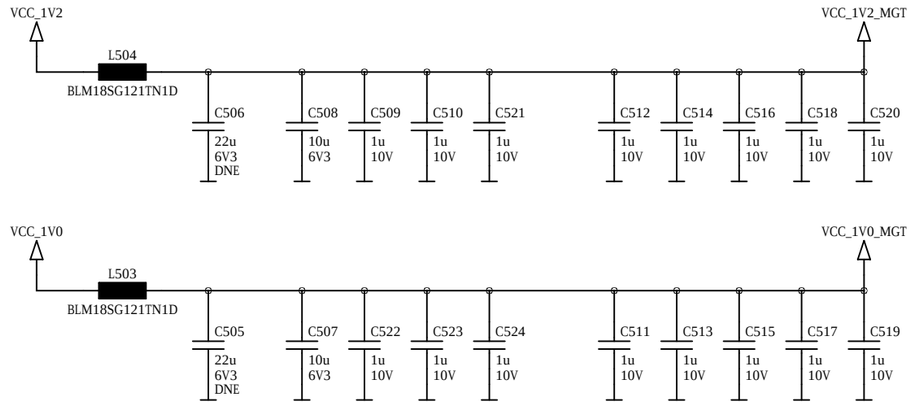

FPGA ADC Supply Filter

not included in user schematics

This part is intentionally left blank.

Analog Reference Voltage

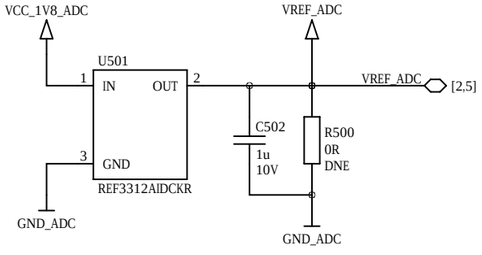

ENCLUSTRA	Copyright	© 2021 by Enclustra GmbH	Sheet Name	5_FPGA_POWER/ANALOG-REFERENCE	Customer No	0000	Revision	R5.0	DNE = do not equip	Confidential
	Company	Enclustra GmbH	Project	Mercury KX1	Project No	434	Designed	MHEI	Date 13 Apr 2021	Sheet/sheets 5 / 21

FPGA Decoupling

not included in user schematics

This part is intentionally left blank.

Power Decoupling

not included in user schematics

This part is intentionally left blank.

Voltage Monitoring

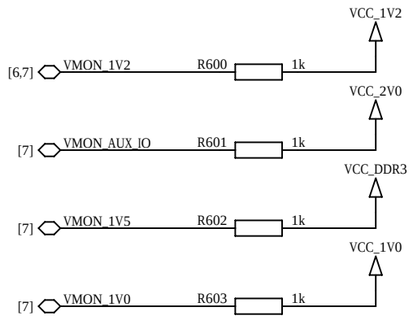

FPGA Battery Voltage

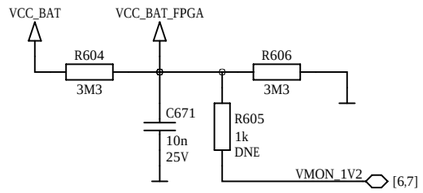

ENCLUSTRA	Copyright	© 2021 by Enclustra GmbH	Sheet Name	6_FPGA_DECOUPLING	Customer No	0000	Revision	R5.0	DNE = do not equip	Confidential
	Company	Enclustra GmbH	Project	Mercury KX1	Project No	434	Designed	MHEI	Date 13 Apr 2021	Sheet/sheets 6 / 21

Module Connector A

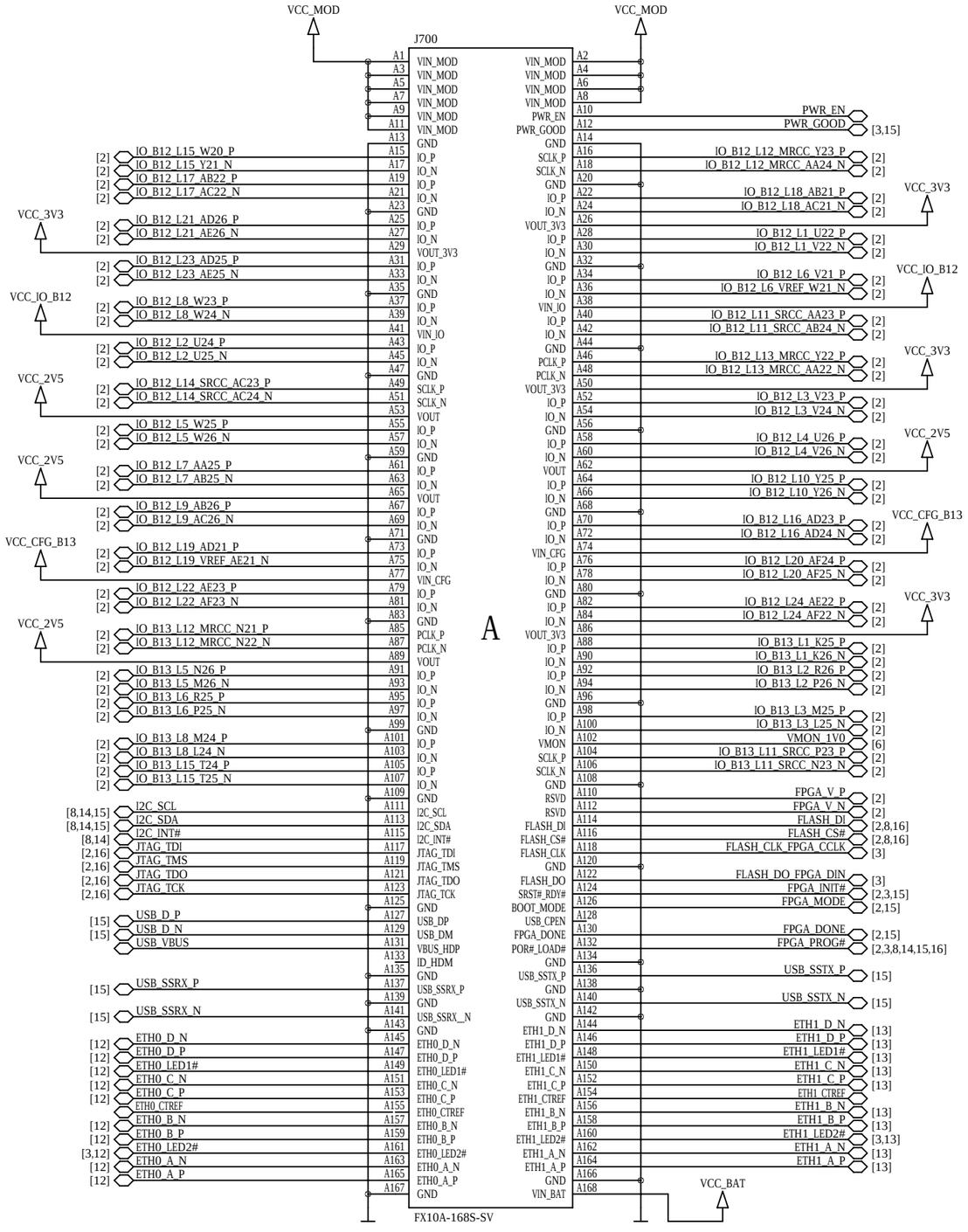

Module Connector B

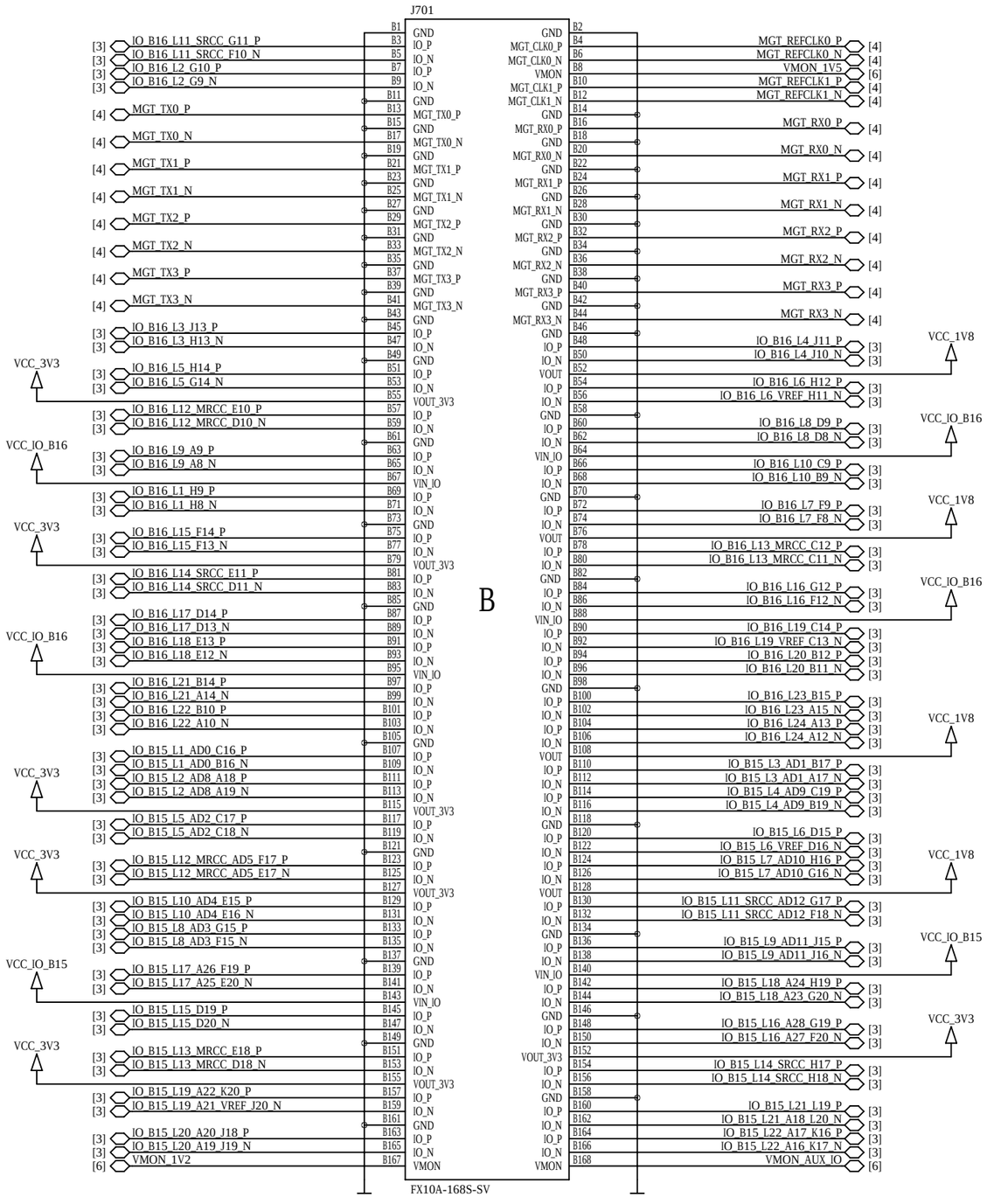

ENCLUSTRA	Copyright	© 2021 by Enclustra GmbH	Sheet Name	7_MODULE_CONNECTORS	Customer No 0000	Revision R5.0	DNE = do not equip	Confidential
	Company	Enclustra GmbH	Project	Mercury KX1	Project No 434	Designed MHEI	Date 13 Apr 2021	Sheet/sheets 7 / 21

Real-time Clock

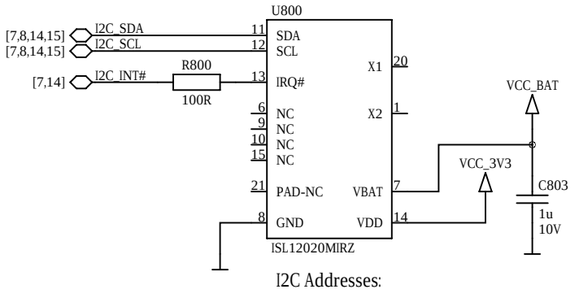

I2C Addresses:
Registers: 1 1 0 1 1 1 1 Rw
User SRAM: 1 0 1 0 1 1 1 Rw

Quad SPI Flash

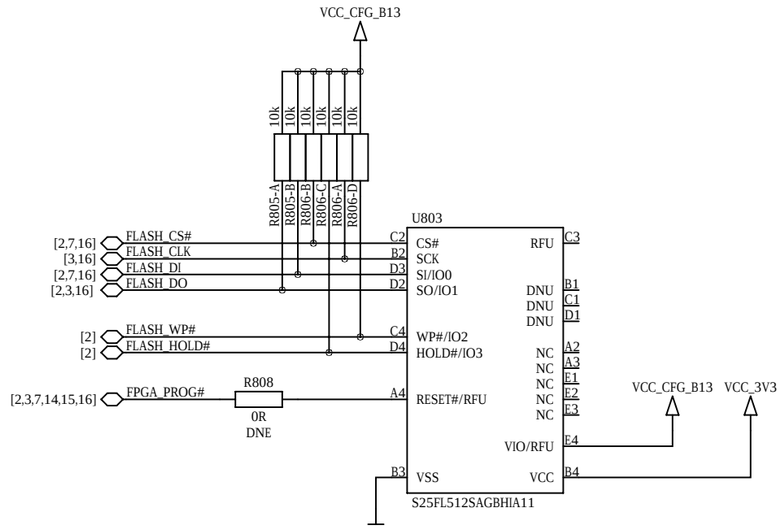

Secure EEPROMs

for Enclustra use only

only one EEPROM can be mounted

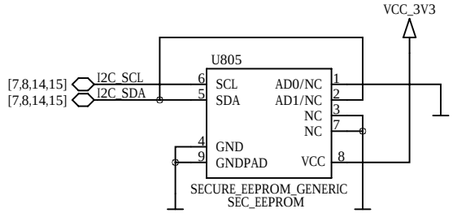

ATSHA204A-MAHDA-T I2C Address: 1 1 0 0 1 0 0 Rw
DS28CN01U-A00+ I2C Address: 1 0 1 1 1 0 0 Rw

100 MHz Oscillator

only one oscillator can be mounted

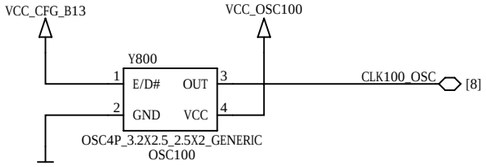

Clock Divider

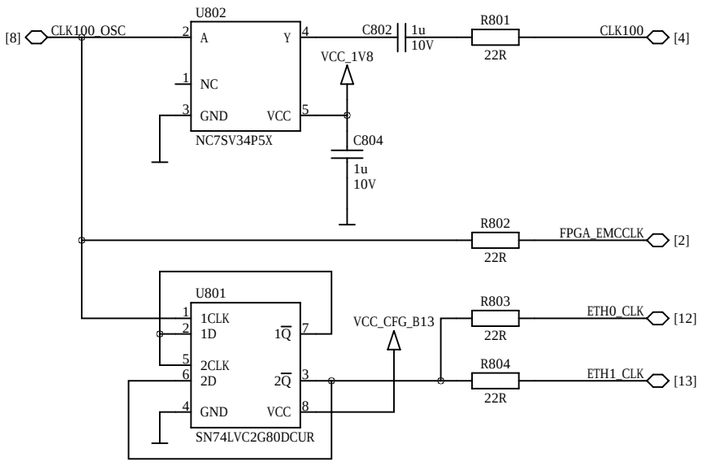

200 MHz Oscillator

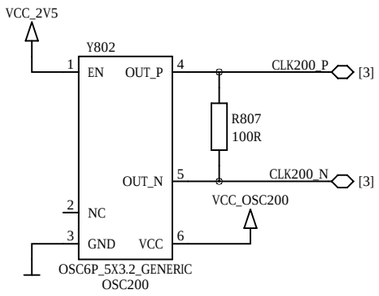

Oscillator Power Filters

not included in user schematics

This part is intentionally left blank.

ENCLUSTRA	Copyright	© 2021 by Enclustra GmbH	Sheet Name	8_RTC/EEPROM/FLASH/OSCILLATOR	Customer No	0000	Revision	R5.0	DNE = do not equip	Confidential
	Company	Enclustra GmbH	Project	Mercury KX1	Project No	434	Designed	MHEI	Date 13 Apr 2021	Sheet/sheets 8 / 21

DDR3L SDRAM Channel A

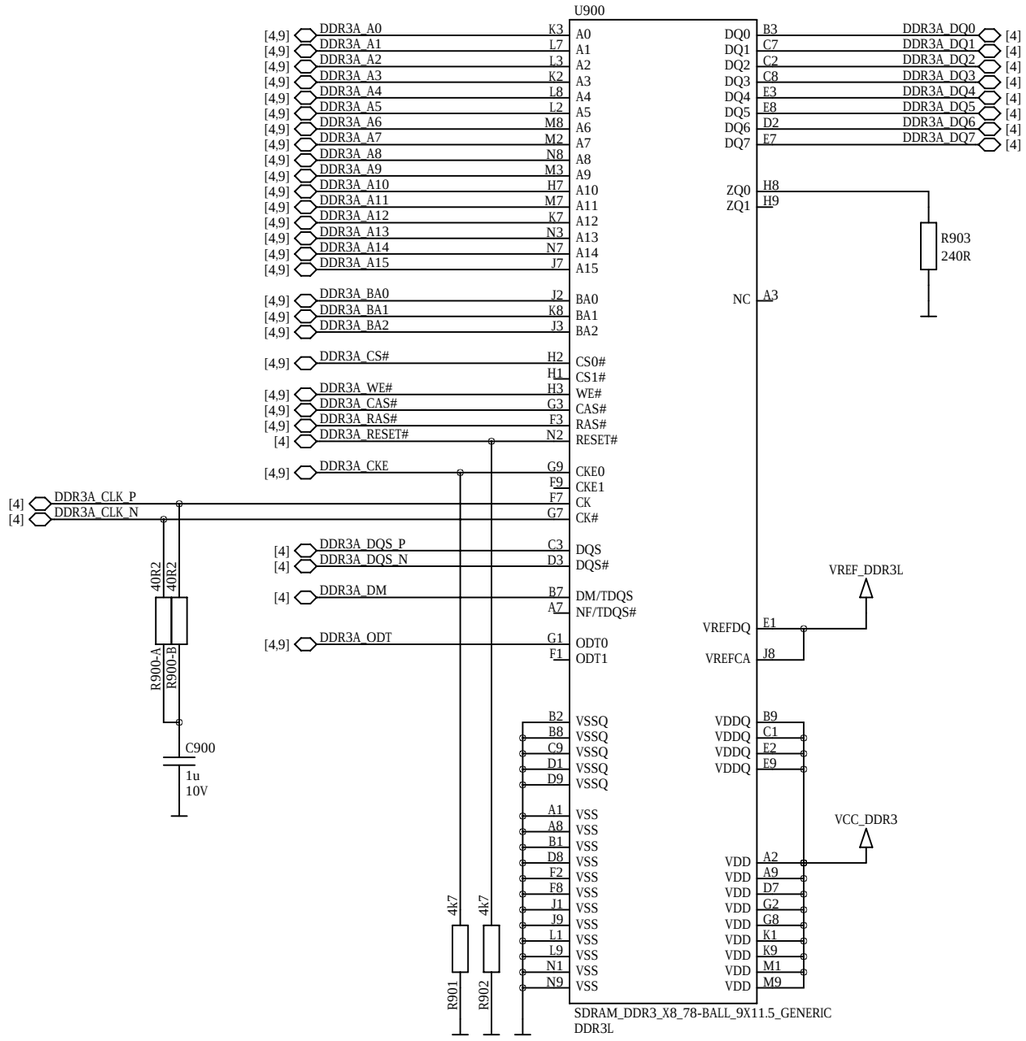

DDR3L-A Termination

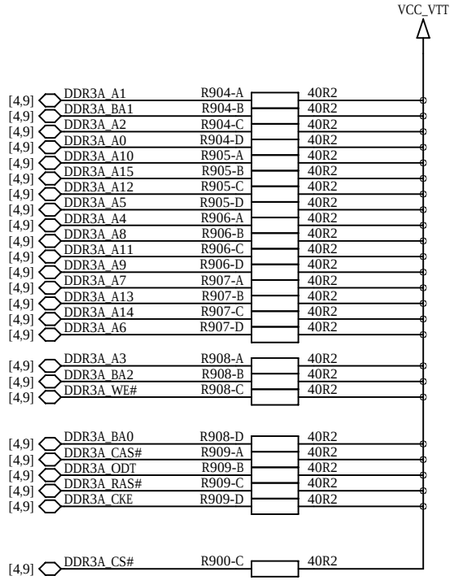

VTT DDR3L Decoupling

not included in user schematics

This part is intentionally left blank.

DDR3L-A Decoupling

not included in user schematics

This part is intentionally left blank.

ENCLUSTRA	Copyright	© 2021 by Enclustra GmbH	Sheet Name	9_DDR3L_SDRAM	Customer No	0000	Revision	R5.0	DNE = do not equip	Confidential
	Company	Enclustra GmbH	Project	Mercury KX1	Project No	434	Designed	MHEI	Date 13 Apr 2021	Sheet/sheets 9 / 21

DDR3L SDRAM Channel B

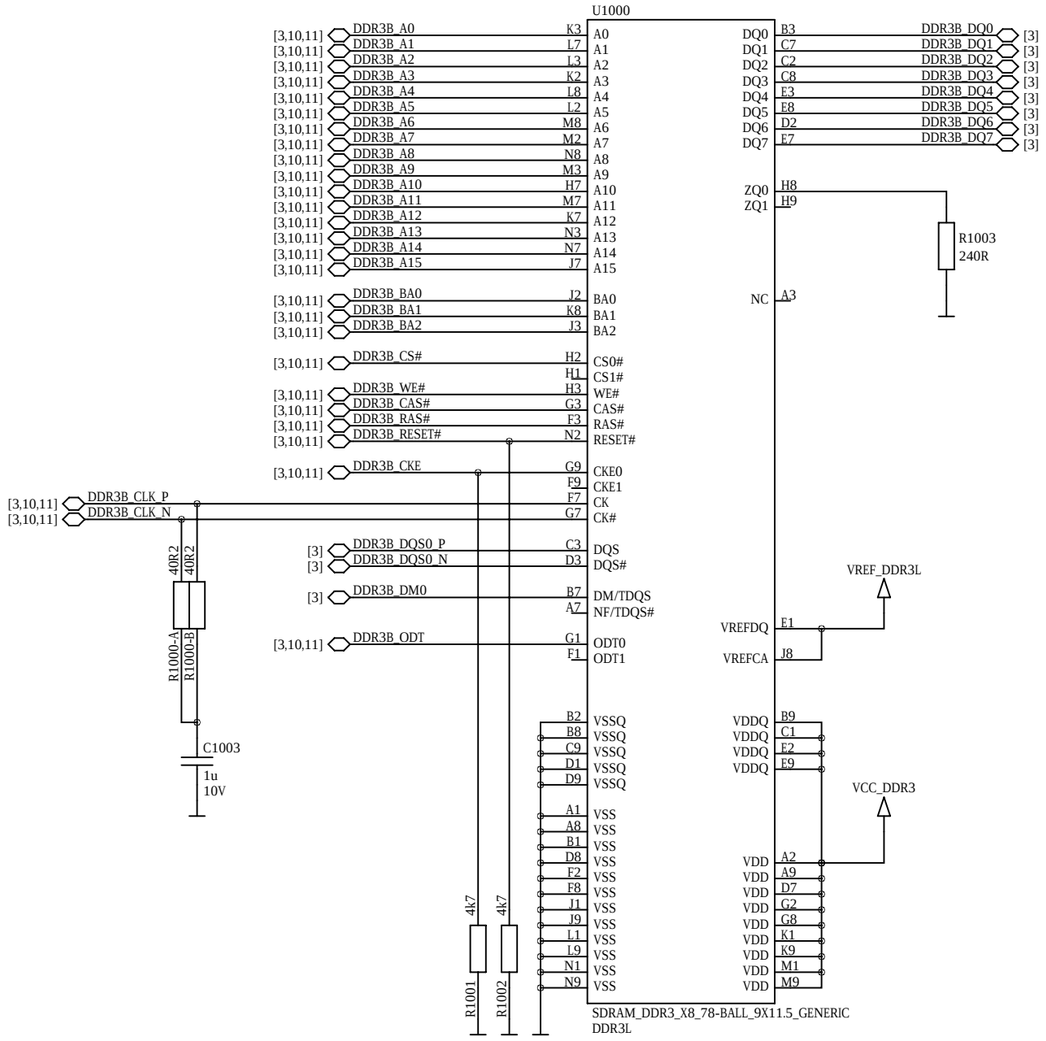

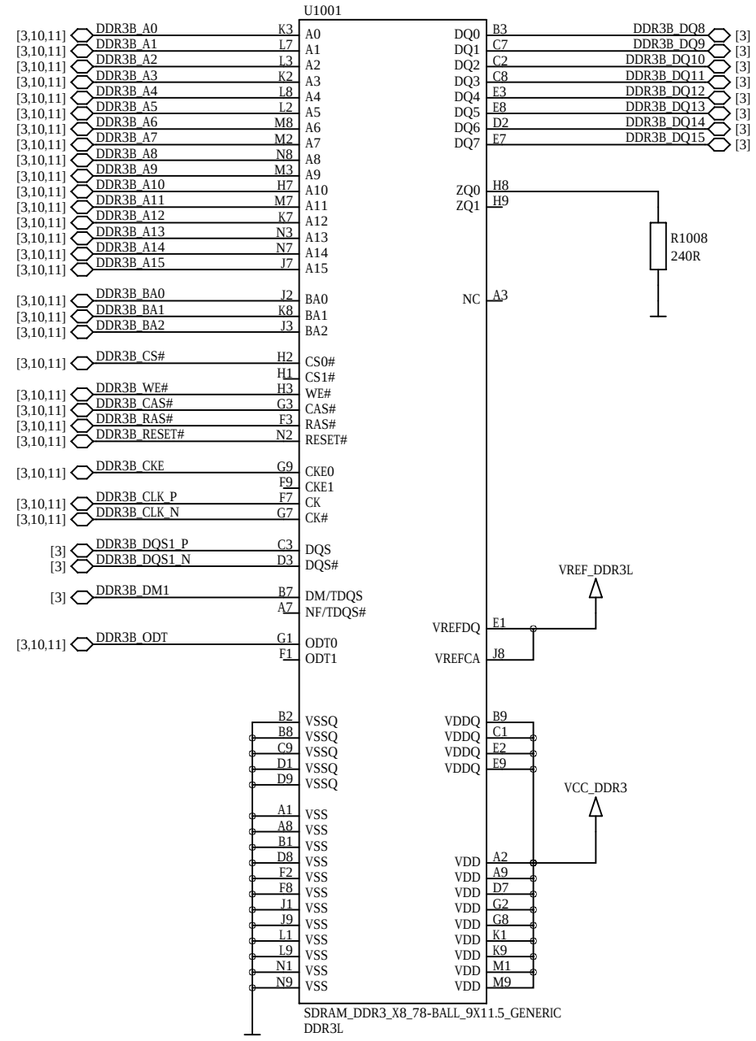

DDR3L-B Decoupling

not included in user schematics

This part is intentionally left blank.

DDR3L-B Termination

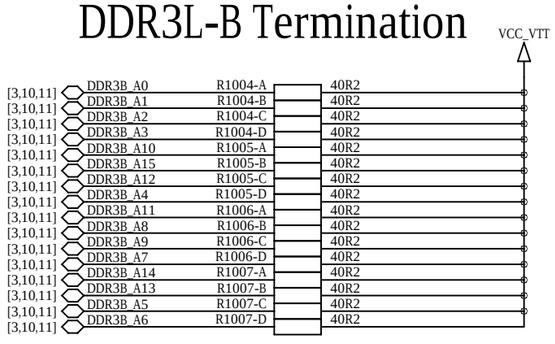

ENCLUSTRA	Copyright	© 2021 by Enclustra GmbH	Sheet Name	10_BIG-DDR3L_SDRAM(LOWER-BITS)	Customer No	0000	Revision	R5.0	DNE = do not equip	Confidential
	Company	Enclustra GmbH	Project	Mercury KX1	Project No	434	Designed	MHEI	Date 13 Apr 2021	Sheet/sheets 10 / 21

DDR3L SDRAM Channel B

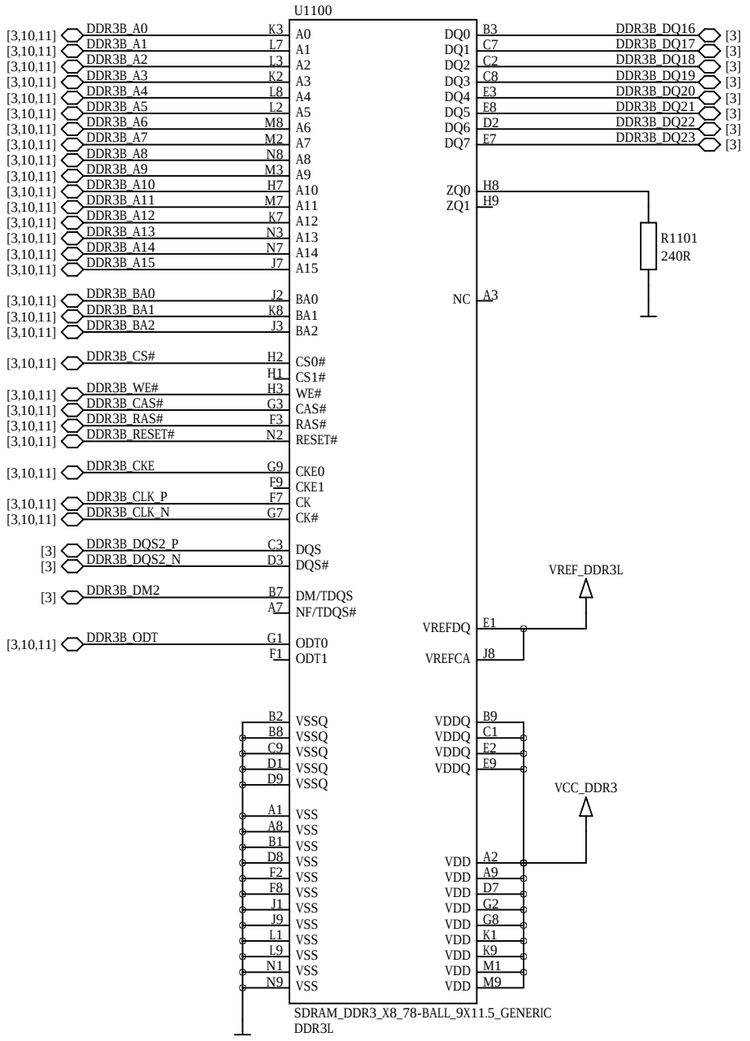

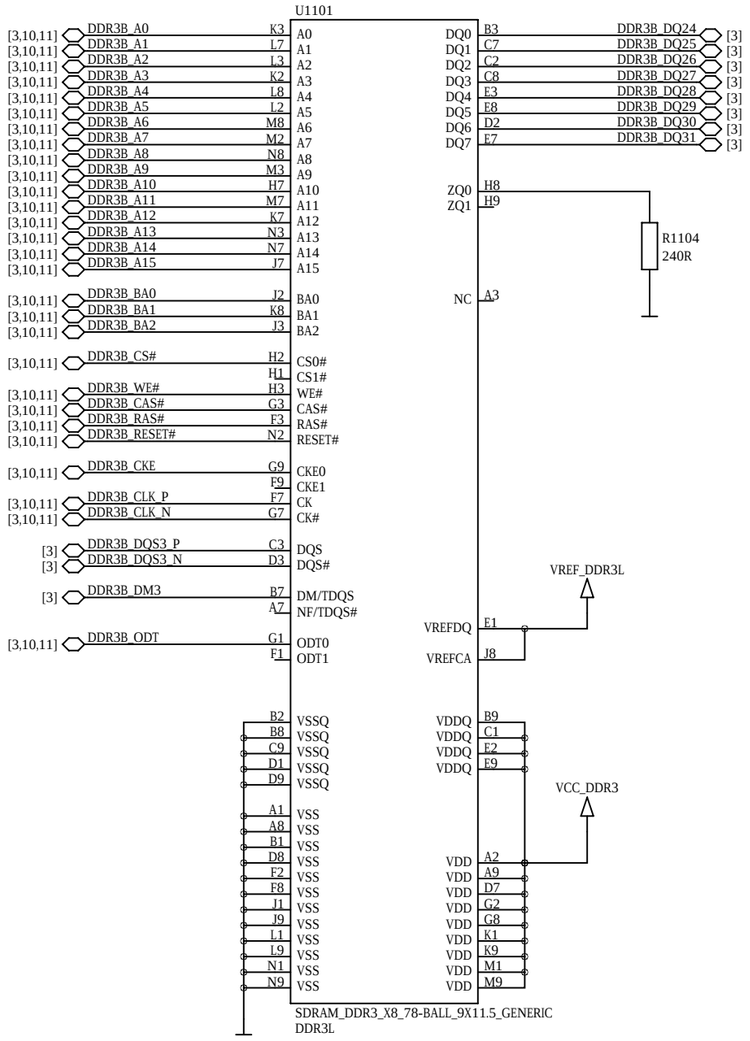

DDR3L-B Decoupling

not included in user schematics

This part is intentionally left blank.

DDR3L-B Termination

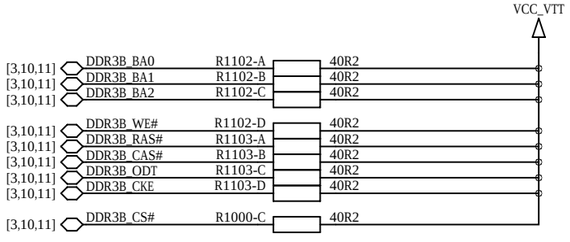

ENCLUSTRA	Copyright	© 2021 by Enclustra GmbH	Sheet Name	11_BIG-DDR3L_SDRAM(UPPER-BITS)	Customer No	0000	Revision	R5.0	DNE = do not equip	Confidential
	Company	Enclustra GmbH	Project	Mercury KX1	Project No	434	Designed	MHEI	Date 13 Apr 2021	Sheet/sheets 11 / 21

Gigabit Ethernet PHY 0

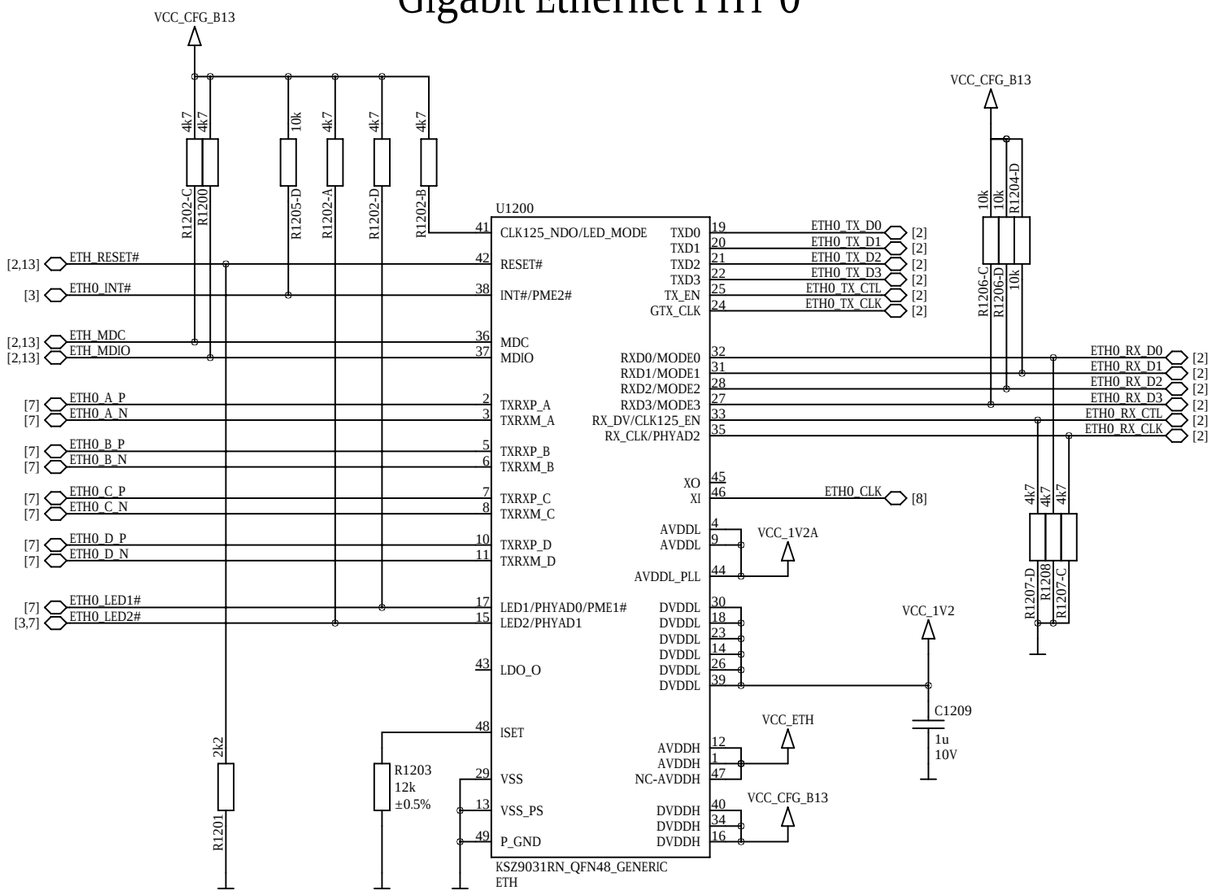

MODE<3:0> = 1110 -> RGMII, all capabilities
LED_Mode Pull up = Single LED
PhyAddress <2:0> = 011 -> 3
LED1 and LED2 are active low

Ethernet Power Filter

not included in user schematics

This part is intentionally left blank.

ENCLUSTRA	Copyright	© 2021 by Enclustra GmbH	Sheet Name	12_ETHERNET_PHY0	Customer No	0000	Revision	R5.0	DNE = do not equip	Confidential
	Company	Enclustra GmbH	Project	Mercury KX1	Project No	434	Designed	MHEI	Date 13 Apr 2021	Sheet/sheets 12 / 21

Gigabit Ethernet PHY 1

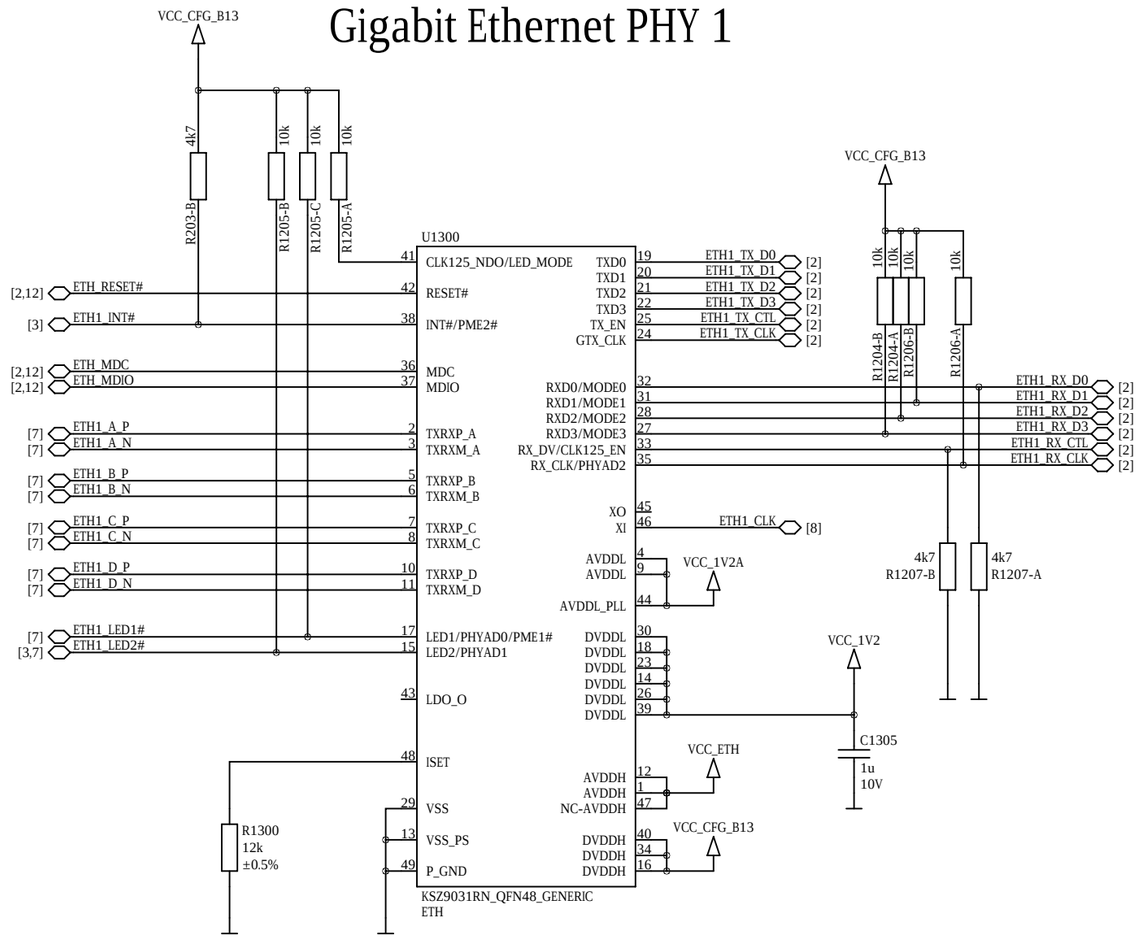

MODE<3:0> = 1110 -> RGMII, all capabilities
LED_Mode Pull up = Single LED
PhyAddress <2:0> = 111 -> 7
LED1 and LED2 are active low

Ethernet Power Filter

not included in user schematics

This part is intentionally left blank.

ENCLUSTRA	Copyright © 2021 by Enclustra GmbH	Sheet Name 13_ETHERNET_PHY1	Customer No 0000	Revision R5.0	DNE = do not equip	Confidential	
	Company Enclustra GmbH	Project Mercury KX1	Project No 434	Designed MHEI	Date 13 Apr 2021	Sheet/sheets 13 / 21	

User LEDs

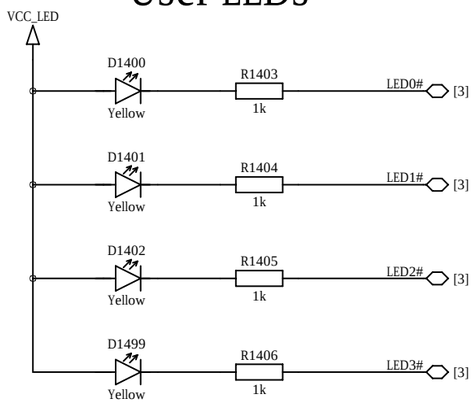

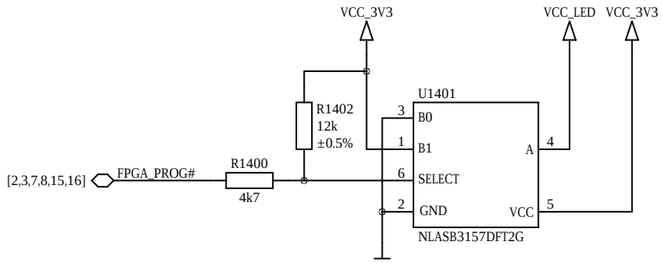

Voltage Select Detection

not included in user schematics

This part is intentionally left blank.

Battery Holder

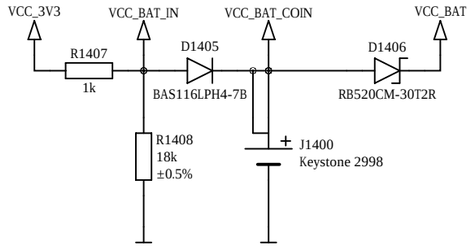

Attention !

Be extremely careful while inserting the battery

to prevent the battery holder from breaking off.

Rechargeable Battery

optional

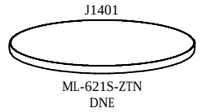

I2C Level Shifter

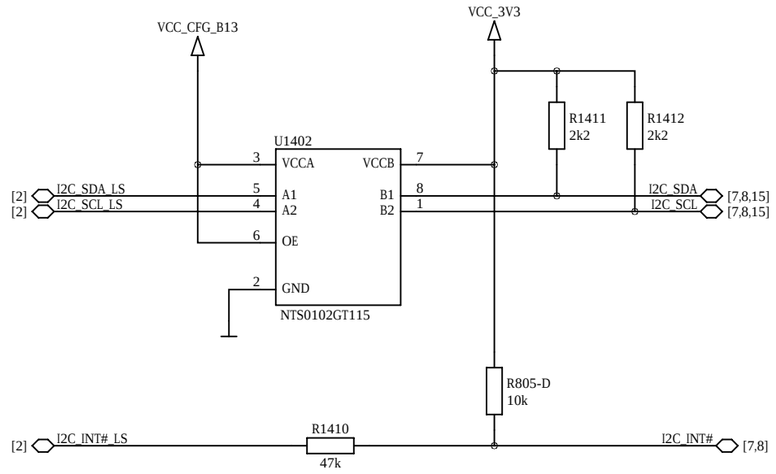

ENCLUSTRA	Copyright	© 2021 by Enclustra GmbH	Sheet Name	14_BATTERY/USERLEDS	Customer No 0000	Revision R5.0	DNE = do not equip	Confidential
	Company	Enclustra GmbH	Project	Mercury KX1	Project No 434	Designed MHEI	Date 13 Apr 2021	Sheet/sheets 14 / 21

USB 3.0 Device Controller (Cypress FX3)

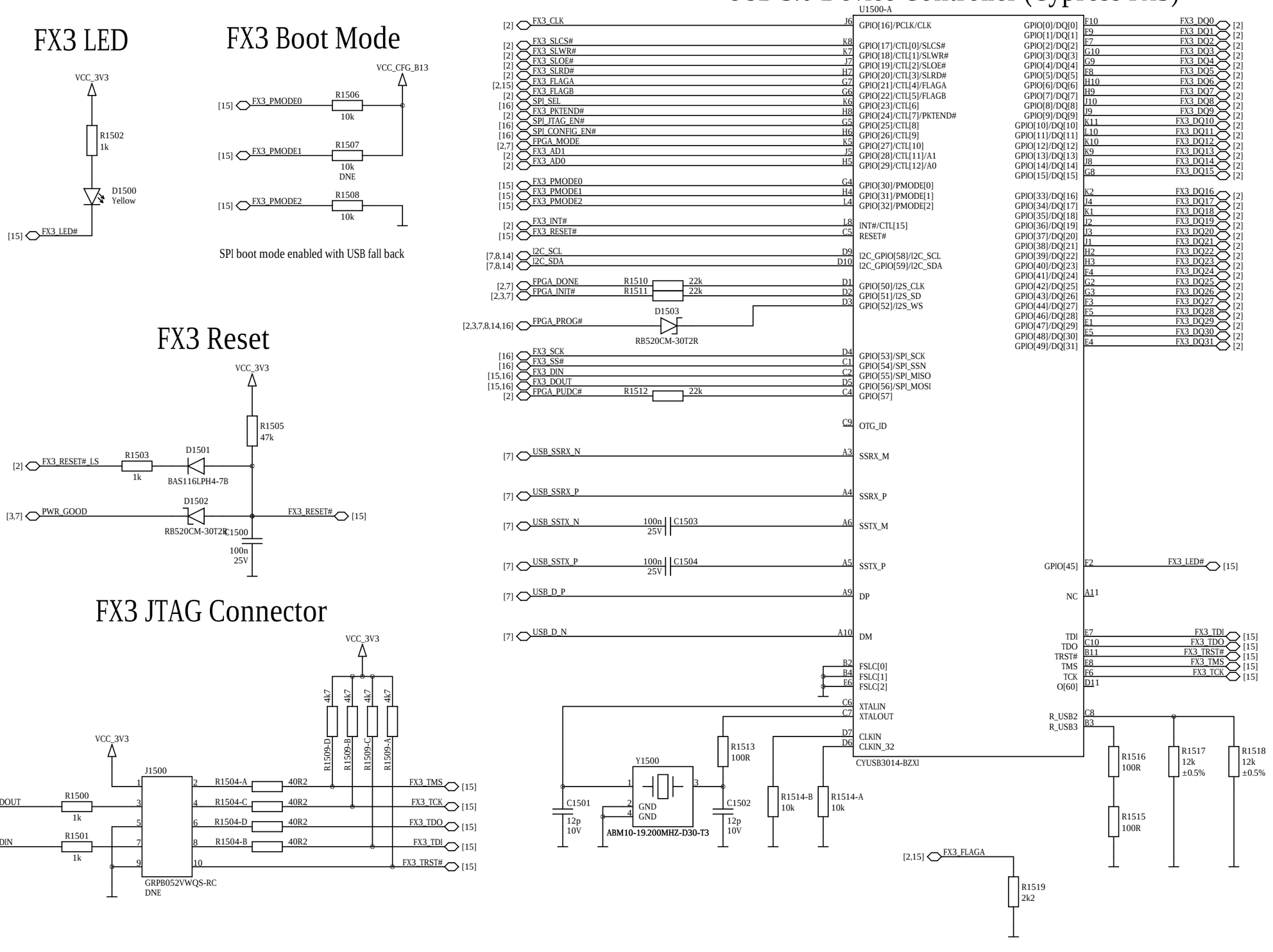

ENCLUSTRA	Copyright © 2021 by Enclustra GmbH	Sheet Name 15_USB3.0_CONTROLLER	Customer No 0000	Revision R5.0	DNE = do not equip	Confidential	
	Company Enclustra GmbH	Project Mercury KX1	Project No 434	Designed MHEI	Date 13 Apr 2021	Sheet/sheets 15 / 21	

FX3 SPI Multiplexers

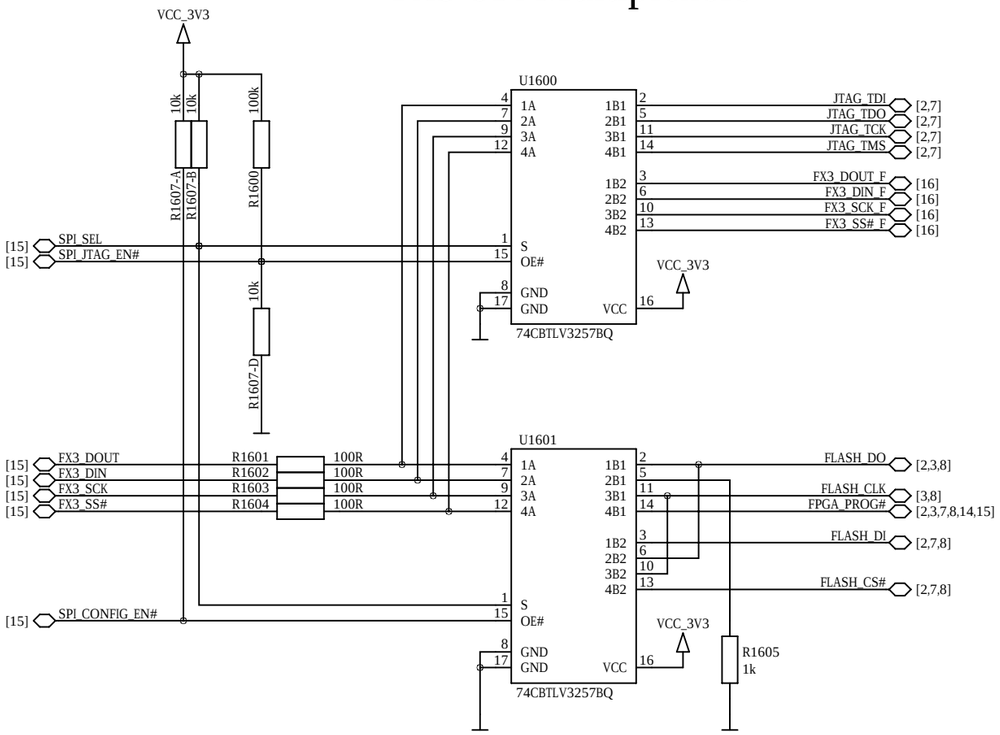

FX3 SPI Flash

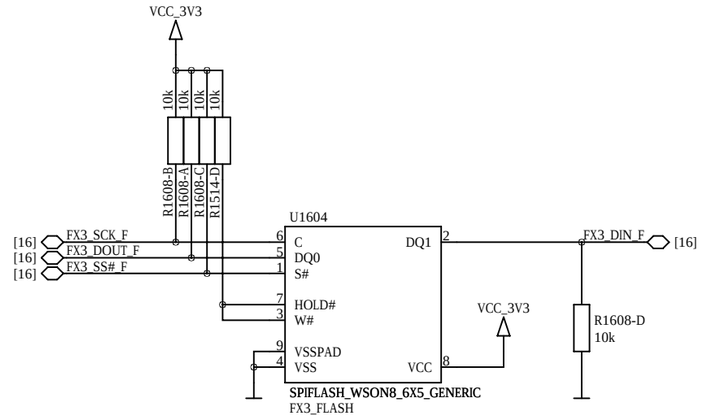

To prevent the FX3 from booting
from the SPI Flash, short circuit
R1600 during power-up

USB 3.0 Device Controller Power

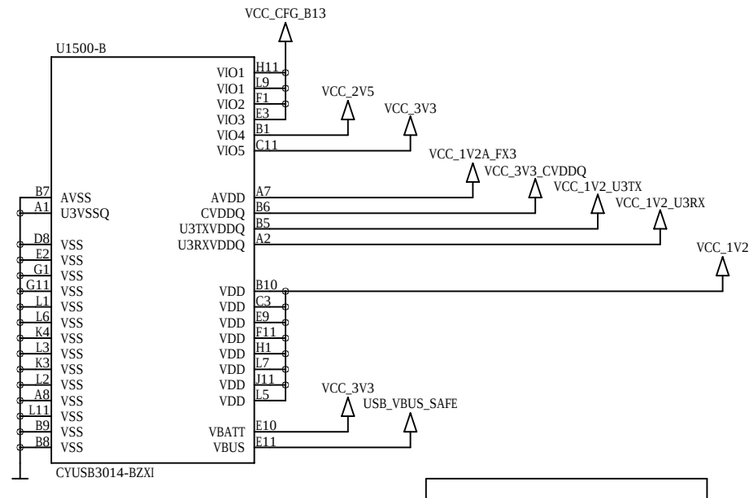

VIO1: GPIO[0..32], INT#
VIO2: GPIO[33..45]
VIO3: GPIO[46..52]
VIO4: GPIO[53..57] (SPI)
VIO5: GPIO[58..59] (I2C), JTAG

R1607-C
10k

FX3 Supply Filters

not included in user schematics

This part is intentionally left blank.

FX3 VBUS Overvoltage Protection

not included in user schematics

This part is intentionally left blank.

DC/DC Converter 3.3V 9A 5%

not included in user schematics

This part is intentionally left blank.

Supported Voltage Ranges

Power Rail	Direction	Range	Tolerance
VCC_MOD	input	5.0V - 15V	±5%
VCC_IO_B12	input	1.0V - 3.3V	±5%
VCC_IO_B15	input	1.0V - 3.3V	±5%
VCC_IO_B16	input	1.8V - 3.3V	±5%
VCC_CFG_B13	input	1.8, 2.5V - 3.3V	±5%
VCC_BAT	input	2.0V - 3.6V	-
VCC_1V8	output	1.8V	±5%
VCC_2V5	output	2.5V	±5%
VCC_3V3	output	3.3V	±5%

DC/DC Converter 1.0V 20A 3%

not included in user schematics

This part is intentionally left blank.

Input Power Filter

not included in user schematics

This part is intentionally left blank.

Dual DC/DC Converter

channel 1: 1.2V 2A 2.8%

channel 2: 1.8V 2A 3%

not included in user schematics

This part is intentionally left blank.

LDO 2.0V 0.15A

only assembled for FPGA in FFG package

not included in user schematics

This part is intentionally left blank.

Dual DC/DC Converter

channel 1: 1.35/1.5V 2A 5%

channel 2: 2.5V 2A 5%

not included in user schematics

This part is intentionally left blank.

DDR3 Voltage Selection

	DDR3_VSEL	VCC_DDR3
Default	"Z"	1.5V
	"0"	1.35V
	"1"	Illegal

DDR3 Termination Voltage Regulator

not included in user schematics

This part is intentionally left blank.

VREF DDR3

not included in user schematics

This part is intentionally left blank.

Module Mounting Holes

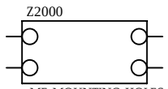

ME-MOUNTING-HOLES_BOARD-71.6X54

PCB Fiducials

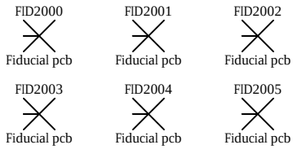

Heat Sink Mounting Holes M2

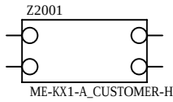

ME-KX1-A_CUSTOMER-HEATSINK

Panel Fiducials

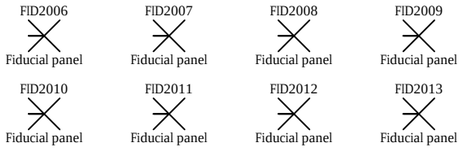

FPGA Heat Sink

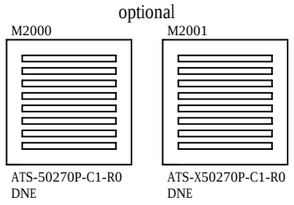

PCB / Logo / Pin-1 Marking / Text

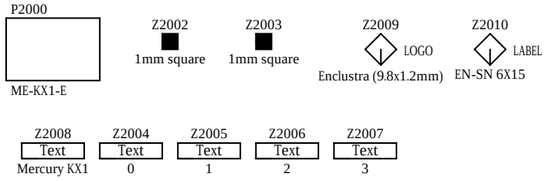

ENCLUSTRA	Copyright	© 2021 by Enclustra GmbH	Sheet Name	20_MECHANICS	Customer No	0000	Revision	R5.0	DNE = do not equip	Confidential
	Company	Enclustra GmbH	Project	Mercury KX1	Project No	434	Designed	MHEI	Date 13 Apr 2021	Sheet/sheets 20 / 21

Component Variants

FPGA	DDR3L		Ethernet PHY	LDO2V0	OSC100	OSC200	L0U68	L1U	SEC_EEPROM	FX3_FLASH
Part U200A XC7K160T-1FBG676C EN100565	Part U900A MT41K256M8DA-125IT:K EN101019	Part U900B K4B4G0846E-BMMA EN102248	Part U1200A KSZ9031RNXCA EN100202	U1800/R1804	Part Y800A ASDMB-100.000MHZ-LY-T EN100284	Part Y802A DSC1123Cl2-200.0000T EN101130	Part L1700A 0u68 EN100848	Part L1801A 1u EN104020	Part U805A ATSHA204A-MAHDA-T EN100827	Part U1604:1 MX25V1635FZNI EN101997
Part U200B XC7K325T-1FBG676C EN100570	Part U1000A MT41K256M8DA-125IT:K EN101019	Part U1000B K4B4G0846E-BMMA EN102248	Part U1200B KSZ9031RNXIA EN101934		Part Y800B ASEMB-100.000MHZ-LY-T EN101056	Part Y802B ASDMPLV-200.000MHZ-LR-T EN100881	Part L1700B 1u EN100436	Part L1801B 1u0 EN101811	Part U805B DS28CN01U-A00+ EN100280	Part U1604:2 AT25SF161-MHD-T EN101939
Part U200C XC7K325T-2FFG676I EN100566	Part U1001A MT41K256M8DA-125IT:K EN101019	Part U1001B K4B4G0846E-BMMA EN102248	Part U1300A KSZ9031RNXCA EN100202					Part L1804A 1u EN104020		Part U1604:3 IS25LP016D-JKLE EN101998
Part U200D XC7K410T-2FFG676I EN100571	Part U1100A MT41K256M8DA-125IT:K EN101019	Part U1100B K4B4G0846E-BMMA EN102248	Part U1300B KSZ9031RNXIA EN101934					Part L1804B 1u0 EN101811		
	Part U1101A MT41K256M8DA-125IT:K EN101019	Part U1101B K4B4G0846E-BMMA EN102248						Part L1900A 1u EN104020		
								Part L1900B 1u0 EN101811		
								Part L1904A 1u EN104020		
								Part L1904B 1u0 EN101811		

Assembly Variants

Assembly Variant	FPGA	DDR3L	Ethernet PHY	LDO2V0	OSC100	OSC200	L0U68	L1U	SEC_EEPROM	FX3_FLASH
Variant EN101816:0 ME-KX1-160-1C-D10-R5	Option EN101816:1 FPGA EN100565	Option EN101816:2 DDR3L EN101019	Option EN101816:3 ETH EN101934	Option EN101816:4 LDO2V0 DNE	Option EN101816:5 OSC100 EN100284	Option EN101816:6 OSC200 EN101130	Option EN101816:7 L0U68 EN100848	Option EN101816:8 L1U EN104020	Option EN101816:9 SEC_EEPROM EN100827	Option EN101816:10 FX3_FLASH EN101997
Variant EN101818:0 ME-KX1-325-2I-D11-P-R5	Option EN101818:1 FPGA EN100566	Option EN101818:2 DDR3L EN102248	Option EN101818:3 ETH EN101934	Option EN101818:4 LDO2V0	Option EN101818:5 OSC100 EN100284	Option EN101818:6 OSC200 EN101130	Option EN101818:7 L0U68 EN100848	Option EN101818:8 L1U EN104020	Option EN101818:9 SEC_EEPROM EN100827	Option EN101818:10 FX3_FLASH EN101997