Enclustra User Schematics

Mercury KX2 Revision 2.2

Disclaimer

User schematics do not include proprietary Enclustra design elements, such as power supply circuits.
These circuits use optimized designs which are extremely compact and remain proprietary to Enclustra.
The user manual provides all necessary information to use the module and its interfaces.

User schematics are provided after purchase of Enclustra hardware, and may also be provided in certain cases before purchase, to assist in product evaluation.
No part of the schematics may be copied or modified without written permission from Enclustra.

Full schematics, including a full bill-of-materials, may be available through the purchase of a hardware licence for the product in question.
Please contact Enclustra Sales for more information.

Note: DNE = Do Not Equip (parts not equipped by default)

© Enclustra GmbH

Mercury+ KX2 FPGA Module

Revision 2.2

Sheet 1: Cover
Sheet 2: FPGA Banks 0 | 14 | Configuration
Sheet 3: FPGA Banks 12 | 13 | 15 | 16 | MGT
Sheet 4: FPGA Banks 32 | 33 | 34
Sheet 5: FPGA Power
Sheet 6: FPGA Decoupling
Sheet 7: Module Connector A | B
Sheet 8: Module Connector C
Sheet 9: Quad SPI FLASH | Oscillators
Sheet 10: DDR3L SDRAM Bytes 0 - 3
Sheet 11: DDR3L SDRAM Bytes 4 - 7
Sheet 12: Gigabit Ethernet PHY 0
Sheet 13: Gigabit Ethernet PHY 1
Sheet 14: I2C Level Shifter | User LEDs | Secure EEPROM
Sheet 15: USB 2.0 Device Controller | JTAG
Sheet 16: USB 2.0 Multiplexers | Level Shifters
Sheet 17: Power 3.3V | 1.0V
Sheet 18: Power DDR3 | 2.5V | VTT
Sheet 19: Power 1.2V | 1.8V | 2.0V
Sheet 20: Mechanics
Sheet 21: Assembly Variants

FPGA Bank 0

VCCO = VCC_CFG_B14

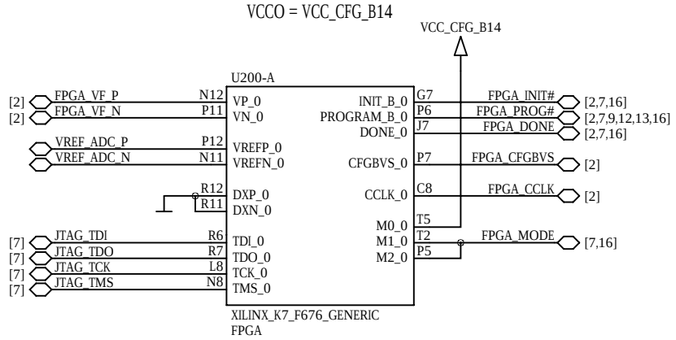

TDI and TMS have internal pullups.

Reset Circuit

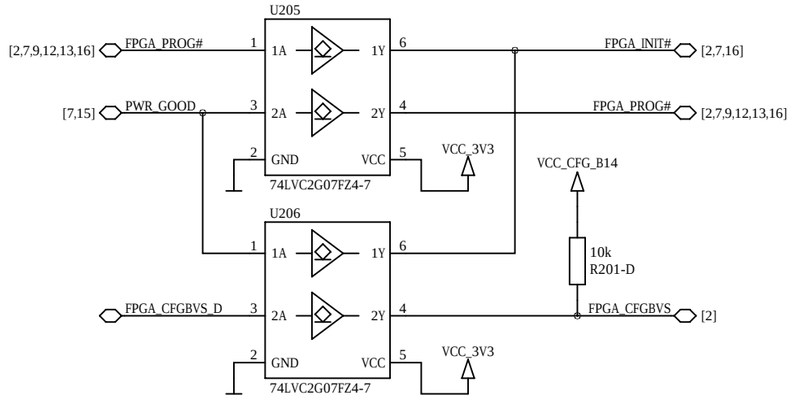

FPGA Mode

		Configuration
Default	0	Active Serial
	1	Passive Serial

Miscellaneous

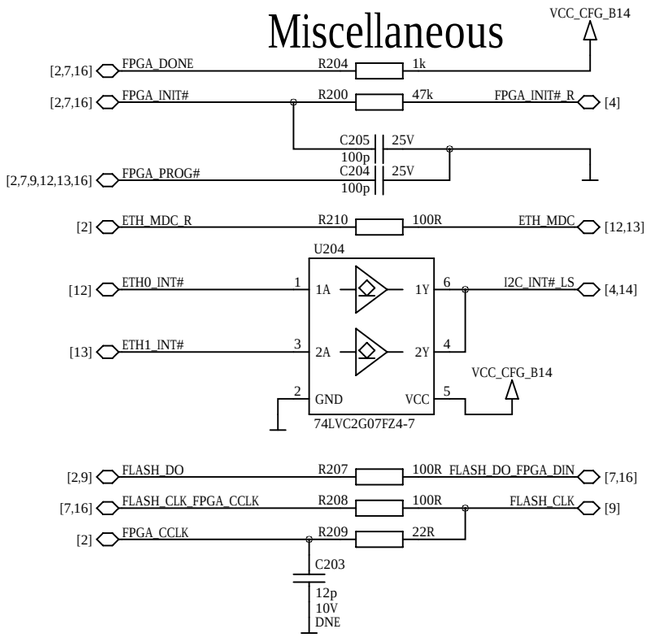

Voltage Select Detection

not included in user schematics

This part is intentionally left blank.

Pull-Up During Configuration

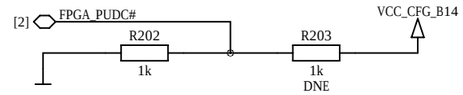

ADC Anti-Alias Filter

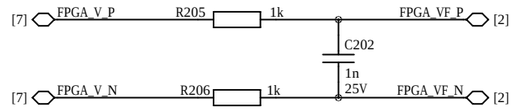

MDIO Multiplexer

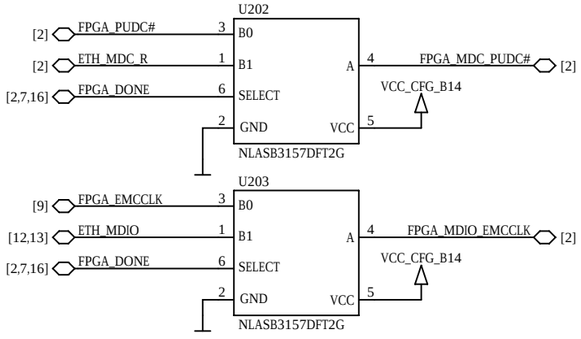

FPGA Bank 14

VCCO = VCC_CFG_B14

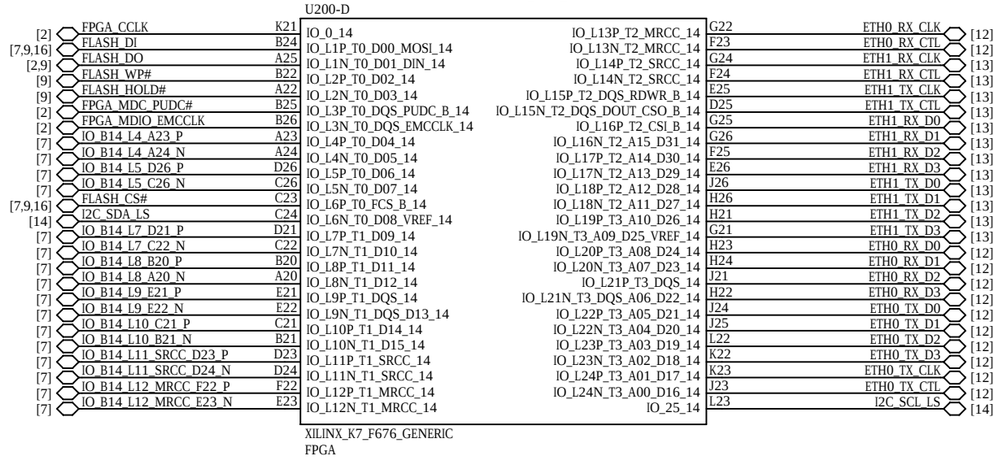

ENCLUSTRA	Copyright	© 2020 by Enclustra GmbH	Sheet Name	2_FPGA_BANKS_0_14_CONFIG	Customer No	0000	Revision	R2.2	DNE = do not equip	Confidential
	Company	Enclustra GmbH	Project	Mercury+ KX2	Project No	430	Designed	MHEI	Date 4 Jun 2020	Sheet/sheets 2 / 21

FPGA Bank 12

VCCO = VCC_IO_B12

Bank is not available in XC7K70T

U200-B

[7]	IO_B12_U21	U21	IO_0_12	IO_L13P_T2_MRCC_12	Y22	IO_B12_L13_MRCC_Y22_P	[7]
[7]	IO_B12_L1_U22_P	U22	IO_L1P_T0_12	IO_L13N_T2_MRCC_12	AA22	IO_B12_L13_MRCC_AA22_N	[7]
[7]	IO_B12_L1_V22_N	V22	IO_L1N_T0_12	IO_L14P_T2_SRCC_12	AC23	IO_B12_L14_SRCC_AC23_P	[7]
[7]	IO_B12_L2_U24_P	U24	IO_L2P_T0_12	IO_L14N_T2_SRCC_12	AC24	IO_B12_L14_SRCC_AC24_N	[7]
[7]	IO_B12_L2_U25_N	U25	IO_L2N_T0_12	IO_L15P_T2_DQS_12	W20	IO_B12_L15_W20_P	[7]
[7]	IO_B12_L3_V23_P	V23	IO_L3P_T0_DQS_12	IO_L15N_T2_DQS_12	Y21	IO_B12_L15_Y21_N	[7]
[7]	IO_B12_L3_V24_N	V24	IO_L3N_T0_DQS_12	IO_L16P_T2_12	AD23	IO_B12_L16_AD23_P	[7]
[7]	IO_B12_L4_U26_P	U26	IO_L4P_T0_12	IO_L16N_T2_12	AD24	IO_B12_L16_AD24_N	[7]
[7]	IO_B12_L4_V26_N	V26	IO_L4N_T0_12	IO_L17P_T2_12	AB22	IO_B12_L17_AB22_P	[7]
[7]	IO_B12_L5_W25_P	W25	IO_L5P_T0_12	IO_L17N_T2_12	AC22	IO_B12_L17_AC22_N	[7]
[7]	IO_B12_L5_W26_N	W26	IO_L5N_T0_12	IO_L18P_T2_12	AB21	IO_B12_L18_AB21_P	[7]
[7]	IO_B12_L6_V21_P	V21	IO_L6P_T0_12	IO_L18N_T2_12	AC21	IO_B12_L18_AC21_N	[7]
[7]	IO_B12_L6_VREF_W21_N	W21	IO_L6N_T0_VREF_12	IO_L19P_T3_12	AD21	IO_B12_L19_AD21_P	[7]
[7]	IO_B12_L7_AA25_P	AA25	IO_L7P_T1_12	IO_L19N_T3_VREF_12	AE21	IO_B12_L19_VREF_AE21_N	[7]
[7]	IO_B12_L7_AB25_N	AB25	IO_L7N_T1_12	IO_L20P_T3_12	AF24	IO_B12_L20_AF24_P	[7]
[7]	IO_B12_L8_W23_P	W23	IO_L8P_T1_12	IO_L20N_T3_12	AF25	IO_B12_L20_AF25_N	[7]
[7]	IO_B12_L8_W24_N	W24	IO_L8N_T1_12	IO_L21P_T3_DQS_12	AD26	IO_B12_L21_AD26_P	[7]
[7]	IO_B12_L9_AB26_P	AB26	IO_L9P_T1_DQS_12	IO_L21N_T3_DQS_12	AE26	IO_B12_L21_AE26_N	[7]
[7]	IO_B12_L9_AC26_N	AC26	IO_L9N_T1_DQS_12	IO_L22P_T3_12	AE23	IO_B12_L22_AE23_P	[7]
[7]	IO_B12_L10_Y25_P	Y25	IO_L10P_T1_12	IO_L22N_T3_12	AF23	IO_B12_L22_AF23_N	[7]
[7]	IO_B12_L10_Y26_N	Y26	IO_L10N_T1_12	IO_L23P_T3_12	AD25	IO_B12_L23_AD25_P	[7]
[7]	IO_B12_L11_SRCC_AA23_P	AA23	IO_L11P_T1_SRCC_12	IO_L23N_T3_12	AE25	IO_B12_L23_AE25_N	[7]
[7]	IO_B12_L11_SRCC_AB24_N	AB24	IO_L11N_T1_SRCC_12	IO_L24P_T3_12	AE22	IO_B12_L24_AE22_P	[7]
[7]	IO_B12_L12_MRCC_Y23_P	Y23	IO_L12P_T1_MRCC_12	IO_L24N_T3_12	AF22	IO_B12_L24_AF22_N	[7]
[7]	IO_B12_L12_MRCC_AA24_N	AA24	IO_L12N_T1_MRCC_12	IO_25_12	Y20	IO_B12_Y20	[7]

XILINX_K7_F676_GENERIC
FPGA

FPGA Bank 13

VCCO = VCC_IO_B13

U200-C

[8]	IO_B13_N16	N16	IO_0_13	IO_L13P_T2_MRCC_13	R21	IO_B13_L13_MRCC_R21_P	[8]
[8]	IO_B13_L1_K25_P	K25	IO_L1P_T0_13	IO_L13N_T2_MRCC_13	P21	IO_B13_L13_MRCC_P21_N	[8]
[8]	IO_B13_L1_K26_N	K26	IO_L1N_T0_13	IO_L14P_T2_SRCC_13	R22	IO_B13_L14_SRCC_R22_P	[8]
[8]	IO_B13_L2_R26_P	R26	IO_L2P_T0_13	IO_L14N_T2_SRCC_13	R23	IO_B13_L14_SRCC_R23_N	[8]
[8]	IO_B13_L2_P26_N	P26	IO_L2N_T0_13	IO_L15P_T2_DQS_13	T24	IO_B13_L15_T24_P	[8]
[8]	IO_B13_L3_M25_P	M25	IO_L3P_T0_DQS_13	IO_L15N_T2_DQS_13	T25	IO_B13_L15_T25_N	[8]
[8]	IO_B13_L3_L25_N	L25	IO_L3N_T0_DQS_13	IO_L16P_T2_13	T20	IO_B13_L16_T20_P	[8]
[8]	IO_B13_L4_P24_P	P24	IO_L4P_T0_13	IO_L16N_T2_13	R20	IO_B13_L16_R20_N	[8]
[8]	IO_B13_L4_N24_N	N24	IO_L4N_T0_13	IO_L17P_T2_13	T22	IO_B13_L17_T22_P	[8]
[8]	IO_B13_L5_N26_P	N26	IO_L5P_T0_13	IO_L17N_T2_13	T23	IO_B13_L17_T23_N	[8]
[8]	IO_B13_L5_M26_N	M26	IO_L5N_T0_13	IO_L18P_T2_13	U19	IO_B13_L18_U19_P	[8]
[8]	IO_B13_L6_R25_P	R25	IO_L6P_T0_13	IO_L18N_T2_13	U20	IO_B13_L18_U20_N	[8]
[8]	IO_B13_L6_VREF_P25_N	P25	IO_L6N_T0_VREF_13	IO_L19P_T3_13	T18	IO_B13_L19_T18_P	[8]
[8]	IO_B13_L7_N19_P	N19	IO_L7P_T1_13	IO_L19N_T3_VREF_13	T19	IO_B13_L19_VREF_T19_N	[8]
[8]	IO_B13_L7_M20_N	M20	IO_L7N_T1_13	IO_L20P_T3_13	P16	IO_B13_L20_P16_P	[8]
[8]	IO_B13_L8_M24_P	M24	IO_L8P_T1_13	IO_L20N_T3_13	N17	IO_B13_L20_N17_N	[8]
[8]	IO_B13_L8_L24_N	L24	IO_L8N_T1_13	IO_L21P_T3_DQS_13	R16	IO_B13_L21_R16_P	[8]
[8]	IO_B13_L9_P19_P	P19	IO_L9P_T1_DQS_13	IO_L21N_T3_DQS_13	R17	IO_B13_L21_R17_N	[8]
[8]	IO_B13_L9_P20_N	P20	IO_L9N_T1_DQS_13	IO_L22P_T3_13	N18	IO_B13_L22_N18_P	[8]
[8]	IO_B13_L10_M21_P	M21	IO_L10P_T1_13	IO_L22N_T3_13	M19	IO_B13_L22_M19_N	[8]
[8]	IO_B13_L10_M22_N	M22	IO_L10N_T1_13	IO_L23P_T3_13	U17	IO_B13_L23_U17_P	[8]
[8]	IO_B13_L11_SRCC_P23_P	P23	IO_L11P_T1_SRCC_13	IO_L23N_T3_13	T17	IO_B13_L23_T17_N	[8]
[8]	IO_B13_L11_SRCC_N23_N	N23	IO_L11N_T1_SRCC_13	IO_L24P_T3_13	R18	IO_B13_L24_R18_P	[8]
[8]	IO_B13_L12_MRCC_N21_P	N21	IO_L12P_T1_MRCC_13	IO_L24N_T3_13	P18	IO_B13_L24_P18_N	[8]
[8]	IO_B13_L12_MRCC_N22_N	N22	IO_L12N_T1_MRCC_13	IO_25_13	U16	IO_B13_U16	[8]

XILINX_K7_F676_GENERIC
FPGA

FPGA Bank 15

VCCO = VCC_IO_B15

U200-E

[8]	IO_B15_K15	K15	IO_0_15	IO_L13P_T2_MRCC_15	E18	IO_B15_L13_MRCC_E18_P	[7]
[8]	IO_B15_L1_AD0_C16_P	C16	IO_L1P_T0_AD0P_15	IO_L13N_T2_MRCC_15	D18	IO_B15_L13_MRCC_D18_N	[7]
[7]	IO_B15_L1_AD0_B16_N	B16	IO_L1N_T0_AD0N_15	IO_L14P_T2_SRCC_15	H17	IO_B15_L14_SRCC_H17_P	[7]
[7]	IO_B15_L2_AD8_A18_P	A18	IO_L2P_T0_AD8P_15	IO_L14N_T2_SRCC_15	H18	IO_B15_L14_SRCC_H18_N	[7]
[7]	IO_B15_L2_AD8_A19_N	A19	IO_L2N_T0_AD8N_15	IO_L15P_T2_DQS_15	D19	IO_B15_L15_D19_P	[7]
[7]	IO_B15_L3_AD1_B17_P	B17	IO_L3P_T0_DQS_AD1P_15	IO_L15N_T2_DQS_ADV_B_15	D20	IO_B15_L15_D20_N	[7]
[7]	IO_B15_L3_AD1_A17_N	A17	IO_L3N_T0_DQS_AD1N_15	IO_L16P_T2_A28_15	G19	IO_B15_L16_G19_P	[7]
[7]	IO_B15_L4_AD9_C19_P	C19	IO_L4P_T0_AD9P_15	IO_L16N_T2_A27_15	F20	IO_B15_L16_F20_N	[7]
[7]	IO_B15_L4_AD9_B19_N	B19	IO_L4N_T0_AD9N_15	IO_L17P_T2_A26_15	F19	IO_B15_L17_F19_P	[7]
[7]	IO_B15_L5_AD2_C17_P	C17	IO_L5P_T0_AD2P_15	IO_L17N_T2_A25_15	E20	IO_B15_L17_E20_N	[7]
[7]	IO_B15_L5_AD2_C18_N	C18	IO_L5N_T0_AD2N_15	IO_L18P_T2_A24_15	H19	IO_B15_L18_H19_P	[7]
[8]	IO_B15_L6_D15_P	D15	IO_L6P_T0_15	IO_L18N_T2_A23_15	G20	IO_B15_L18_G20_N	[7]
[8]	IO_B15_L6_VREF_D16_N	D16	IO_L6N_T0_VREF_15	IO_L19P_T3_A22_15	K20	IO_B15_L19_K20_P	[7]
[8]	IO_B15_L7_AD10_H16_P	H16	IO_L7P_T1_AD10P_15	IO_L19N_T3_A21_VREF_15	J20	IO_B15_L19_VREF_J20_N	[7]
[8]	IO_B15_L7_AD10_G16_N	G16	IO_L7N_T1_AD10N_15	IO_L20P_T3_A20_15	J18	IO_B15_L20_J18_P	[7]
[8]	IO_B15_L8_AD3_G15_P	G15	IO_L8P_T1_AD3P_15	IO_L20N_T3_A19_15	J19	IO_B15_L20_J19_N	[7]
[8]	IO_B15_L8_AD3_F15_N	F15	IO_L8N_T1_AD3N_15	IO_L21P_T3_DQS_15	L19	IO_B15_L21_L19_P	[7]
[8]	IO_B15_L9_AD11_J15_P	J15	IO_L9P_T1_DQS_AD11P_15	IO_L21N_T3_DQS_A18_15	L20	IO_B15_L21_L20_N	[7]
[8]	IO_B15_L9_AD11_J16_N	J16	IO_L9N_T1_DQS_AD11N_15	IO_L22P_T3_A17_15	K16	IO_B15_L22_K16_P	[7]
[8]	IO_B15_L10_AD4_E15_P	E15	IO_L10P_T1_AD4P_15	IO_L22N_T3_A16_15	K17	IO_B15_L22_K17_N	[7]
[8]	IO_B15_L10_AD4_E16_N	E16	IO_L10N_T1_AD4N_15	IO_L23P_T3_FOE_B_15	M17	IO_B15_L23_M17_P	[7]
[7]	IO_B15_L11_SRCC_AD12_G17_P	G17	IO_L11P_T1_SRCC_AD12P_15	IO_L23N_T3_FWE_B_15	L18	IO_B15_L23_L18_N	[7]
[7]	IO_B15_L11_SRCC_AD12_F18_N	F18	IO_L11N_T1_SRCC_AD12N_15	IO_L24P_T3_RS1_15	L17	IO_B15_L24_L17_P	[7]
[8]	IO_B15_L12_MRCC_AD5_F17_P	F17	IO_L12P_T1_MRCC_AD5P_15	IO_L24N_T3_RS0_15	K18	IO_B15_L24_K18_N	[7]
[8]	IO_B15_L12_MRCC_AD5_E17_N	E17	IO_L12N_T1_MRCC_AD5N_15	IO_25_15	M16	IO_B15_M16	[8]

XILINX_K7_F676_GENERIC
FPGA

FPGA Bank 16

VCCO = VCC_IO_B16

U200-F

[8]	IO_B16_J8	J8	IO_0_16	IO_L13P_T2_MRCC_16	C12	IO_B16_L13_MRCC_C12_P	[7]
[8]	IO_B16_L1_H9_P	H9	IO_L1P_T0_16	IO_L13N_T2_MRCC_16	C11	IO_B16_L13_MRCC_C11_N	[7]
[8]	IO_B16_L1_H8_N	H8	IO_L1N_T0_16	IO_L14P_T2_SRCC_16	E11	IO_B16_L14_SRCC_E11_P	[7]
[7]	IO_B16_L2_G10_P	G10	IO_L2P_T0_16	IO_L14N_T2_SRCC_16	D11	IO_B16_L14_SRCC_D11_N	[7]
[7]	IO_B16_L2_G9_N	G9	IO_L2N_T0_16	IO_L15P_T2_DQS_16	F14	IO_B16_L15_F14_P	[7]
[7]	IO_B16_L3_J13_P	J13	IO_L3P_T0_DQS_16	IO_L15N_T2_DQS_16	F13	IO_B16_L15_F13_N	[7]
[7]	IO_B16_L3_H13_N	H13	IO_L3N_T0_DQS_16	IO_L16P_T2_16	G12	IO_B16_L16_G12_P	[7]
[7]	IO_B16_L4_J11_P	J11	IO_L4P_T0_16	IO_L16N_T2_16	F12	IO_B16_L16_F12_N	[7]
[7]	IO_B16_L4_J10_N	J10	IO_L4N_T0_16	IO_L17P_T2_16	D14	IO_B16_L17_D14_P	[7]
[7]	IO_B16_L5_H14_P	H14	IO_L5P_T0_16	IO_L17N_T2_16	D13	IO_B16_L17_D13_N	[7]
[7]	IO_B16_L5_G14_N	G14	IO_L5N_T0_16	IO_L18P_T2_16	E13	IO_B16_L18_E13_P	[7]
[7]	IO_B16_L6_H12_P	H12	IO_L6P_T0_16	IO_L18N_T2_16	E12	IO_B16_L18_E12_N	[7]
[7]	IO_B16_L6_VREF_H11_N	H11	IO_L6N_T0_VREF_16	IO_L19P_T3_16	C14	IO_B16_L19_C14_P	[7]
[8]	IO_B16_L7_F9_P	F9	IO_L7P_T1_16	IO_L19N_T3_VREF_16	C13	IO_B16_L19_VREF_C13_N	[7]
[8]	IO_B16_L7_F8_N	F8	IO_L7N_T1_16	IO_L20P_T3_16	B12	IO_B16_L20_B12_P	[7]
[8]	IO_B16_L8_D9_P	D9	IO_L8P_T1_16	IO_L20N_T3_16	B11	IO_B16_L20_B11_N	[7]
[8]	IO_B16_L8_D8_N	D8	IO_L8N_T1_16	IO_L21P_T3_DQS_16	B14	IO_B16_L21_B14_P	[7]
[8]	IO_B16_L9_A9_P	A9	IO_L9P_T1_DQS_16	IO_L21N_T3_DQS_16	A14	IO_B16_L21_A14_N	[7]
[8]	IO_B16_L9_A8_N	A8	IO_L9N_T1_DQS_16	IO_L22P_T3_16	B10	IO_B16_L22_B10_P	[7]
[8]	IO_B16_L10_C9_P	C9	IO_L10P_T1_16	IO_L22N_T3_16	A10	IO_B16_L22_A10_N	[7]
[8]	IO_B16_L10_B9_N	B9	IO_L10N_T1_16	IO_L23P_T3_16	B15	IO_B16_L23_B15_P	[7]
[7]	IO_B16_L11_SRCC_G11_P	G11	IO_L11P_T1_SRCC_16	IO_L23N_T3_16	A15	IO_B16_L23_A15_N	[7]
[7]	IO_B16_L11_SRCC_F10_N	F10	IO_L11N_T1_SRCC_16	IO_L24P_T3_16	A13	IO_B16_L24_A13_P	[7]
[7]	IO_B16_L12_MRCC_E10_P	E10	IO_L12P_T1_MRCC_16	IO_L24N_T3_16	A12	IO_B16_L24_A12_N	[7]
[8]	IO_B16_L12_MRCC_D10_N	D10	IO_L12N_T1_MRCC_16	IO_25_16	J14	IO_B16_J14	[8]

XILINX_K7_F676_GENERIC
FPGA

FPGA MGT Bank 115

VCC_1V2_MGT

U200-J

		M5	MGTAVTTRCAL_115	MGTRREF_115	M6	R300 100R		VCC_1V2_MGT
[7]	MGT_REFCLK0_H6_P	H6	MGTREFCLK0P_115	MGTREFCLK1P_115	K6	MGT_REFCLK1_K6_P	[7]	
[7]	MGT_REFCLK0_H5_N	H5	MGTREFCLK0N_115	MGTREFCLK1N_115	K5	MGT_REFCLK1_K5_N	[7]	
[7]	MGT_RX0_R4_P	R4	MGTXRXP0_115	MGTXTXP0_115	P2	MGT_TX0_P2_P	[7]	
[7]	MGT_RX0_R3_N	R3	MGTXRXN0_115	MGTXTXN0_115	P1	MGT_TX0_P1_N	[7]	
[7]	MGT_RX1_N4_P	N4	MGTXRXP1_115	MGTXTXP1_115	M2	MGT_TX1_M2_P	[7]	
[7]	MGT_RX1_N3_N	N3	MGTXRXN1_115	MGTXTXN1_115	M1	MGT_TX1_M1_N	[7]	
[7]	MGT_RX2_L4_P	L4	MGTXRXP2_115	MGTXTXP2_115	K2	MGT_TX2_K2_P	[7]	
[7]	MGT_RX2_L3_N	L3	MGTXRXN2_115	MGTXTXN2_115	K1	MGT_TX2_K1_N	[7]	
[7]	MGT_RX3_J4_P	J4	MGTXRXP3_115	MGTXTXP3_115	H2	MGT_TX3_H2_P	[7]	
[7]	MGT_RX3_J3_N	J3	MGTXRXN3_115	MGTXTXN3_115	H1	MGT_TX3_H1_N	[7]	

XILINX_K7_F676_GENERIC
FPGA

FPGA MGT Bank 116

U200-K

[7]	MGT_REFCLK2_D6_P	D6	MGTREFCLK0P_116	MGTREFCLK1P_116	F6	MGT_REFCLK3_F6_P	[7]
[7]	MGT_REFCLK2_D5_N	D5	MGTREFCLK0N_116	MGTREFCLK1N_116	F5	MGT_REFCLK3_F5_N	[7]
[7]	MGT_RX4_G4_P	G4	MGTXRXP0_116	MGTXTXP0_116	F2	MGT_TX4_F2_P	[7]
[7]	MGT_RX4_G3_N	G3	MGTXRXN0_116	MGTXTXN0_116	F1	MGT_TX4_F1_N	[7]
[7]	MGT_RX5_E4_P	E4	MGTXRXP1_116	MGTXTXP1_116	D2	MGT_TX5_D2_P	[7]
[7]	MGT_RX5_E3_N	E3	MGTXRXN1_116	MGTXTXN1_116	D1	MGT_TX5_D1_N	[7]
[7]	MGT_RX6_C4_P	C4	MGTXRXP2_116	MGTXTXP2_116	B2	MGT_TX6_B2_P	[7]
[7]	MGT_RX6_C3_N	C3	MGTXRXN2_116	MGTXTXN2_116	B1	MGT_TX6_B1_N	[7]
[7]	MGT_RX7_B6_P	B6	MGTXRXP3_116	MGTXTXP3_116	A4	MGT_TX7_A4_P	[7]
[7]	MGT_RX7_B5_N	B5	MGTXRXN3_116	MGTXTXN3_116	A3	MGT_TX7_A3_N	[7]

XILINX_K7_F676_GENERIC
FPGA

ENCLUSTRA	Copyright	© 2020 by Enclustra GmbH	Sheet Name	3_FPGA_BANKS_12_13_15_16_MGT	Customer No 0000	Revision R2.2	DNE = do not equip	Confidential
	Company	Enclustra GmbH	Project	Mercury+ KX2	Project No 430	Designed MHEI	Date 4 Jun 2020	Sheet/sheets 3 / 21

FPGA Bank 32

VCCO = VCC_DDR3

Bank is not available in XC7K70T

U200-G

[14]	LED2#	V13	IO_0_VRN_32	IO_L13P_T2_MRCC_32	AC18	I2C_INT#_LS	[2,14]
[11]	DDR3_DQ33	AE17	IO_L1P_T0_32	IO_L13N_T2_MRCC_32	AD18	DDR3_DQ54	[11]
[11]	DDR3_DQ39	AF17	IO_L1N_T0_32	IO_L14P_T2_SRCC_32	AB17	DDR3_DQ55	[11]
[11]	DDR3_DQ37	AF14	IO_L2P_T0_32	IO_L14N_T2_SRCC_32	AC17	DDR3_DQ53	[11]
[11]	DDR3_DQ34	AF15	IO_L2N_T0_32	IO_L15P_T2_DQS_32	AD20	DDR3_DQS6_P	[11]
[11]	DDR3_DQS4_P	AE18	IO_L3P_T0_DQS_32	IO_L15N_T2_DQS_32	AE20	DDR3_DQS6_N	[11]
[11]	DDR3_DQS4_N	AF18	IO_L3N_T0_DQS_32	IO_L16P_T2_32	AA19	DDR3_DQ52	[11]
[11]	DDR3_DQ36	AD15	IO_L4P_T0_32	IO_L16N_T2_32	AA20	DDR3_DQ51	[11]
[11]	DDR3_DQ38	AE15	IO_L4N_T0_32	IO_L17P_T2_32	AC19	DDR3_DQ50	[11]
[11]	DDR3_DM4	AF19	IO_L5P_T0_32	IO_L17N_T2_32	AD19	DDR3_DQ49	[11]
[11]	DDR3_DQ35	AF20	IO_L5N_T0_32	IO_L18P_T2_32	AB19	DDR3_DM6	[11]
[11]	DDR3_DQ32	AD16	IO_L6P_T0_32	IO_L18N_T2_32	AB20	DDR3_DQ48	[11]
[4,10,11]	VREF_DDR3	AE16	IO_L6N_T0_VREF_32	IO_L19P_T3_32	Y17	DDR3_DQ63	[11]
[11]	DDR3_DQ40	AA14	IO_L7P_T1_32	IO_L19N_T3_VREF_32	Y18	VREF_DDR3	[4,10,11]
[11]	DDR3_DQ41	AA15	IO_L7N_T1_32	IO_L20P_T3_32	V16	DDR3_DQ59	[11]
[11]	DDR3_DQ42	AC14	IO_L8P_T1_32	IO_L20N_T3_32	V17	DDR3_DQ61	[11]
[11]	DDR3_DQ43	AD14	IO_L8N_T1_32	IO_L21P_T3_DQS_32	W18	DDR3_DQS7_P	[11]
[11]	DDR3_DQS5_P	Y15	IO_L9P_T1_DQS_32	IO_L21N_T3_DQS_32	W19	DDR3_DQS7_N	[11]
[11]	DDR3_DQS5_N	Y16	IO_L9N_T1_DQS_32	IO_L22P_T3_32	W15	DDR3_DQ56	[11]
[11]	DDR3_DQ44	AB14	IO_L10P_T1_32	IO_L22N_T3_32	W16	DDR3_DQ57	[11]
[11]	DDR3_DQ45	AB15	IO_L10N_T1_32	IO_L23P_T3_32	V18	DDR3_DQ62	[11]
[11]	DDR3_DQ46	AA17	IO_L11P_T1_SRCC_32	IO_L23N_T3_32	V19	DDR3_DQ60	[11]
[11]	DDR3_DQ47	AA18	IO_L11N_T1_SRCC_32	IO_L24P_T3_32	V14	DDR3_DM7	[11]
[16]	UART_RX	AB16	IO_L12P_T1_MRCC_32	IO_L24N_T3_32	W14	DDR3_DQ58	[11]
[11]	DDR3_DM5	AC16	IO_L12N_T1_MRCC_32	IO_25_VRP_32	W13	LED3#	[14]

XILINX_K7_F676_GENERIC
FPGA

FPGA Bank 33

VCCO = VCC_DDR3

U200-H

R400
100R

[14]	LED0#	U9	IO_0_VRN_33	IO_L13P_T2_MRCC_33	AB11	CLK200_P	[9]
[16]	FTDI_OE#	V11	IO_L1P_T0_33	IO_L13N_T2_MRCC_33	AC11	CLK200_N	[9]
[16]	UART_TX	W11	IO_L1N_T0_33	IO_L14P_T2_SRCC_33	AA10	DDR3_BA1	[10,11]
[16]	FTDI_RD#	V8	IO_L2P_T0_33	IO_L14N_T2_SRCC_33	AB10	DDR3_A3	[10,11]
[16]	FTDI_WR#	V7	IO_L2N_T0_33	IO_L15P_T2_DQS_33	AB12	DDR3_CK_P	[10,11]
[16]	FTDI_D0	W10	IO_L3P_T0_DQS_33	IO_L15N_T2_DQS_33	AC12	DDR3_CK_N	[10,11]
[16]	FTDI_D1	W9	IO_L3N_T0_DQS_33	IO_L16P_T2_33	AA13	DDR3_CKE0	[10,11]
[16]	FTDI_D2	Y8	IO_L4P_T0_33	IO_L16N_T2_33	AA12	DDR3_WE#	[10,11]
[16]	FTDI_D3	Y7	IO_L4N_T0_33	IO_L17P_T2_33	AC13	DDR3_ODT1	[10,11]
[16]	FTDI_D4	Y11	IO_L5P_T0_33	IO_L17N_T2_33	AD13	DDR3_ODT0	[10,11]
[16]	FTDI_D5	Y10	IO_L5N_T0_33	IO_L18P_T2_33	Y13	DDR3_CS1#	[10,11]
[16]	FTDI_D6	V9	IO_L6P_T0_33	IO_L18N_T2_33	Y12	DDR3_CS0#	[10,11]
[16]	FTDI_D7	W8	IO_L6N_T0_VREF_33	IO_L19P_T3_33	AD11	DDR3_BA0	[10,11]
[16]	FTDI_TXE#	AE7	IO_L7P_T1_33	IO_L19N_T3_VREF_33	AE11	DDR3_A0	[10,11]
[16]	FTDI_RXF#	AF7	IO_L7N_T1_33	IO_L20P_T3_33	AD10	DDR3_A2	[10,11]
[10,11]	DDR3_A6	AA8	IO_L8P_T1_33	IO_L20N_T3_33	AE10	DDR3_A12	[10,11]
[10,11]	DDR3_A8	AA7	IO_L8N_T1_33	IO_L21P_T3_DQS_33	AE12	DDR3_CAS#	[10,11]
[10,11]	DDR3_A7	AC8	IO_L9P_T1_DQS_33	IO_L21N_T3_DQS_33	AF12	DDR3_BA2	[10,11]
[10,11]	DDR3_A11	AD8	IO_L9N_T1_DQS_33	IO_L22P_T3_33	AE8	DDR3_A9	[10,11]
[10,11]	DDR3_RESET#	AB7	IO_L10P_T1_33	IO_L22N_T3_33	AF8	DDR3_A13	[10,11]
[10,11]	DDR3_A14	AC7	IO_L10N_T1_33	IO_L23P_T3_33	AE13	DDR3_RAS#	[10,11]
[10,11]	DDR3_A4	AA9	IO_L11P_T1_SRCC_33	IO_L23N_T3_33	AF13	DDR3_CKE1	[10,11]
[10,11]	DDR3_A5	AB9	IO_L11N_T1_SRCC_33	IO_L24P_T3_33	AF10	DDR3_A10	[10,11]
[16]	FTDI_CLKOUT	AC9	IO_L12P_T1_MRCC_33	IO_L24N_T3_33	AF9	DDR3_A1	[10,11]
[2]	FPGA_INIT#_R	AD9	IO_L12N_T1_MRCC_33	IO_25_VRP_33	V12	LED1#	[14]

XILINX_K7_F676_GENERIC
FPGA

FPGA Bank 34

VCCO = VCC_DDR3

U200-I

[4]	DDR3_VRN	U4	IO_0_VRN_34	IO_L13P_T2_MRCC_34	AA4	CLK100	[9]
[10]	DDR3_DQ12	U6	IO_L1P_T0_34	IO_L13N_T2_MRCC_34	AB4	DDR3_DQ28	[10]
[10]	DDR3_DM1	U5	IO_L1N_T0_34	IO_L14P_T2_SRCC_34	AC4	DDR3_DM3	[10]
[10]	DDR3_DQ15	U2	IO_L2P_T0_34	IO_L14N_T2_SRCC_34	AC3	DDR3_DQ31	[10]
[10]	DDR3_DQ10	U1	IO_L2N_T0_34	IO_L15P_T2_DQS_34	AA5	DDR3_DQS3_P	[10]
[10]	DDR3_DQS1_P	W6	IO_L3P_T0_DQS_34	IO_L15N_T2_DQS_34	AB5	DDR3_DQS3_N	[10]
[10]	DDR3_DQS1_N	W5	IO_L3N_T0_DQS_34	IO_L16P_T2_34	AB6	DDR3_DQ30	[10]
[10]	DDR3_DQ9	V3	IO_L4P_T0_34	IO_L16N_T2_34	AC6	DDR3_DQ26	[10]
[10]	DDR3_DQ8	W3	IO_L4N_T0_34	IO_L17P_T2_34	Y6	DDR3_DQ27	[10]
[10]	DDR3_DQ11	U7	IO_L5P_T0_34	IO_L17N_T2_34	Y5	DDR3_DQ25	[10]
[10]	DDR3_DQ14	V6	IO_L5N_T0_34	IO_L18P_T2_34	AD6	DDR3_DQ29	[10]
[10]	DDR3_DQ13	V4	IO_L6P_T0_34	IO_L18N_T2_34	AD5	DDR3_DQ24	[10]
[4,10,11]	VREF_DDR3	W4	IO_L6N_T0_VREF_34	IO_L19P_T3_34	AD4	DDR3_DM2	[10]
[10]	DDR3_DM0	Y3	IO_L7P_T1_34	IO_L19N_T3_VREF_34	AD3	VREF_DDR3	[4,10,11]
[10]	DDR3_DQ1	Y2	IO_L7N_T1_34	IO_L20P_T3_34	AD1	DDR3_DQ19	[10]
[10]	DDR3_DQ7	V2	IO_L8P_T1_34	IO_L20N_T3_34	AE1	DDR3_DQ20	[10]
[10]	DDR3_DQ3	V1	IO_L8N_T1_34	IO_L21P_T3_DQS_34	AF5	DDR3_DQS2_P	[10]
[10]	DDR3_DQS0_P	AB1	IO_L9P_T1_DQS_34	IO_L21N_T3_DQS_34	AF4	DDR3_DQS2_N	[10]
[10]	DDR3_DQS0_N	AC1	IO_L9N_T1_DQS_34	IO_L22P_T3_34	AE3	DDR3_DQ16	[10]
[10]	DDR3_DQ5	W1	IO_L10P_T1_34	IO_L22N_T3_34	AE2	DDR3_DQ21	[10]
[10]	DDR3_DQ4	Y1	IO_L10N_T1_34	IO_L23P_T3_34	AE6	DDR3_DQ17	[10]
[10]	DDR3_DQ2	AB2	IO_L11P_T1_SRCC_34	IO_L23N_T3_34	AE5	DDR3_DQ23	[10]
[10]	DDR3_DQ6	AC2	IO_L11N_T1_SRCC_34	IO_L24P_T3_34	AF3	DDR3_DQ18	[10]
	DDR3_VSEL	AA3	IO_L12P_T1_MRCC_34	IO_L24N_T3_34	AF2	DDR3_DQ22	[10]
[10]	DDR3_DQ0	AA2	IO_L12N_T1_MRCC_34	IO_25_VRP_34	T7	DDR3_VRP	[4]

XILINX_K7_F676_GENERIC
FPGA

FPGA Driver Calibration

VCC_DDR3

[4] DDR3_VRN — R402 80R6

[4] DDR3_VRP — R403 80R6

DDR3 VREF Decoupling

not included in user schematics

This part is intentionally left blank.

FPGA Power

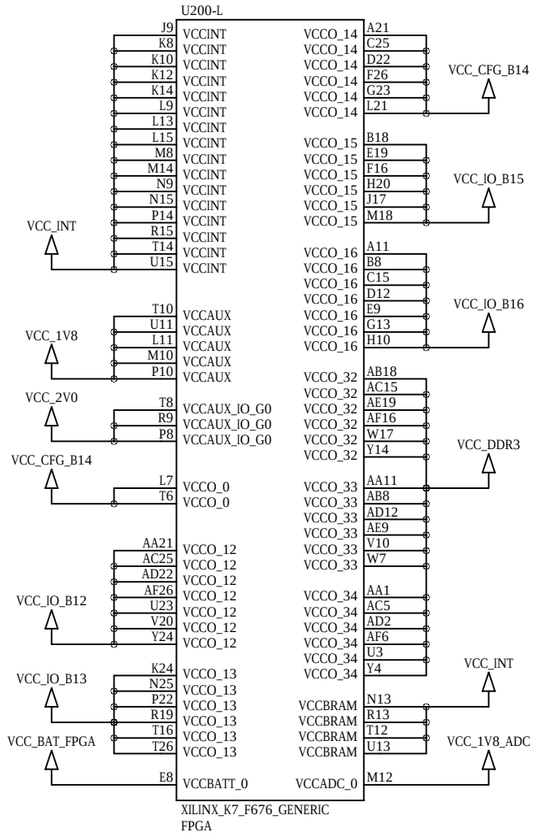

FPGA MGT Power

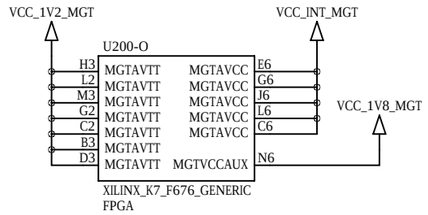

MGT Power Filters

not included in user schematics

This part is intentionally left blank.

FPGA Ground

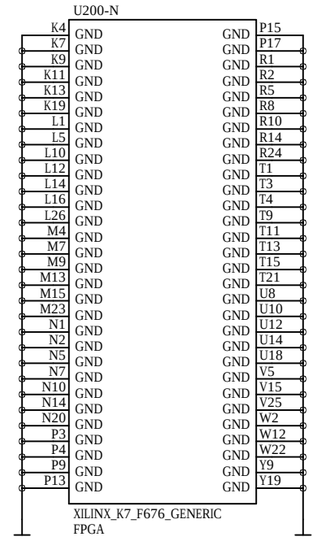

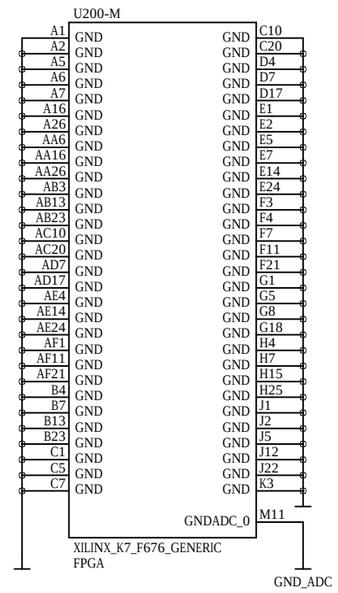

FPGA ADC Supply Filter

not included in user schematics

This part is intentionally left blank.

Analog Reference Voltage

not included in user schematics

This part is intentionally left blank.

ENCLUSTRA	Copyright © 2020 by Enclustra GmbH	Sheet Name 5_FPGA_POWER	Customer No 0000	Revision R2.2	DNE = do not equip	Confidential	
	Company Enclustra GmbH	Project Mercury+ KX2	Project No 430	Designed MHEI	Date 4 Jun 2020	Sheet/sheets 5 / 21	

FPGA Decoupling

not included in user schematics

This part is intentionally left blank.

Power Decoupling

not included in user schematics

This part is intentionally left blank.

Voltage Monitoring

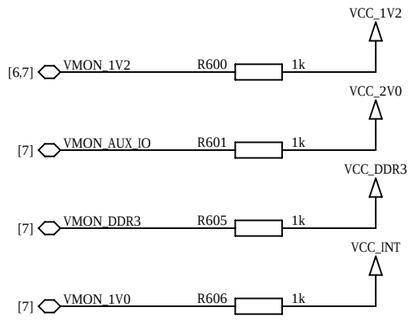

FPGA Battery Voltage

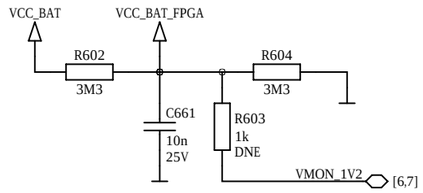

ENCLUSTRA	Copyright	© 2020 by Enclustra GmbH	Sheet Name	6_FPGA_DECOUPLING	Customer No	0000	Revision	R2.2	DNE = do not equip	Confidential
	Company	Enclustra GmbH	Project	Mercury+ KX2	Project No	430	Designed	MHEI	Date 4 Jun 2020	Sheet/sheets 6 / 21

Module Connector A

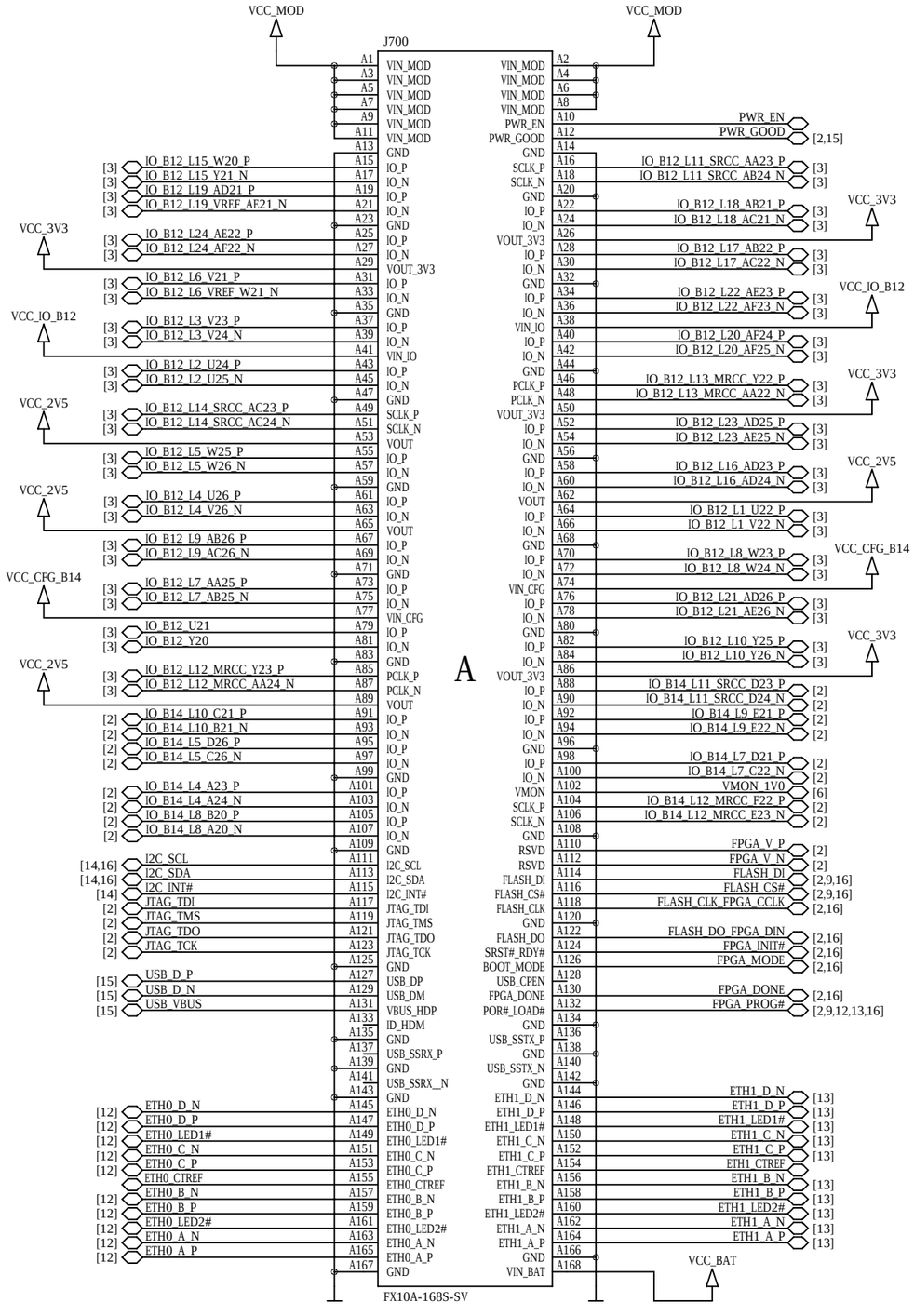

Module Connector B

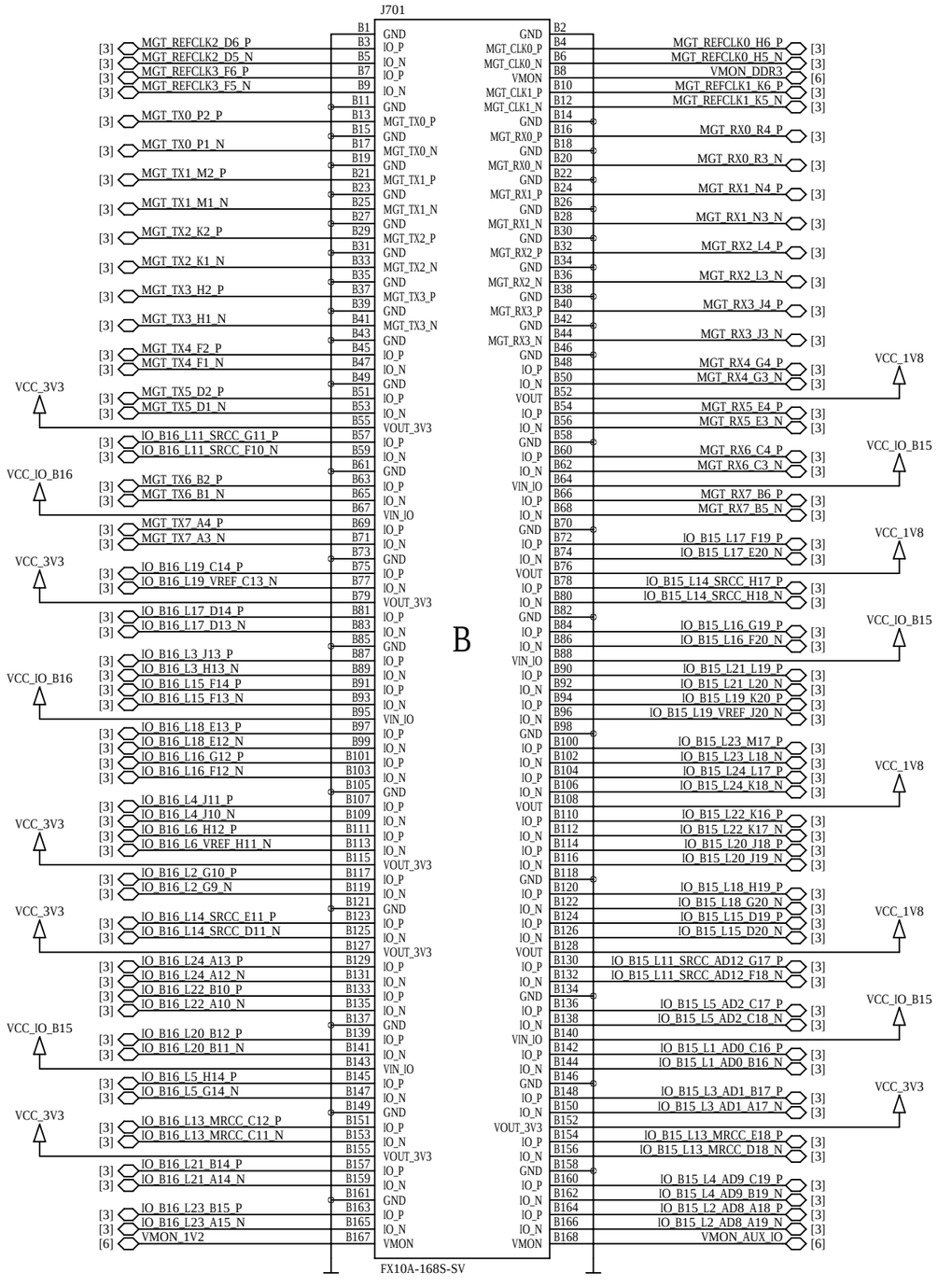

ENCLUSTRA	Copyright © 2020 by Enclustra GmbH	Sheet Name 7_MODULE_CONNECTORS_A_B	Customer No 0000	Revision R2.2	DNE = do not equip	Confidential
	Company Enclustra GmbH	Project Mercury+ KX2	Project No 430	Designed MHEI	Date 4 Jun 2020	Sheet/sheets 7 / 21

Module Connector C

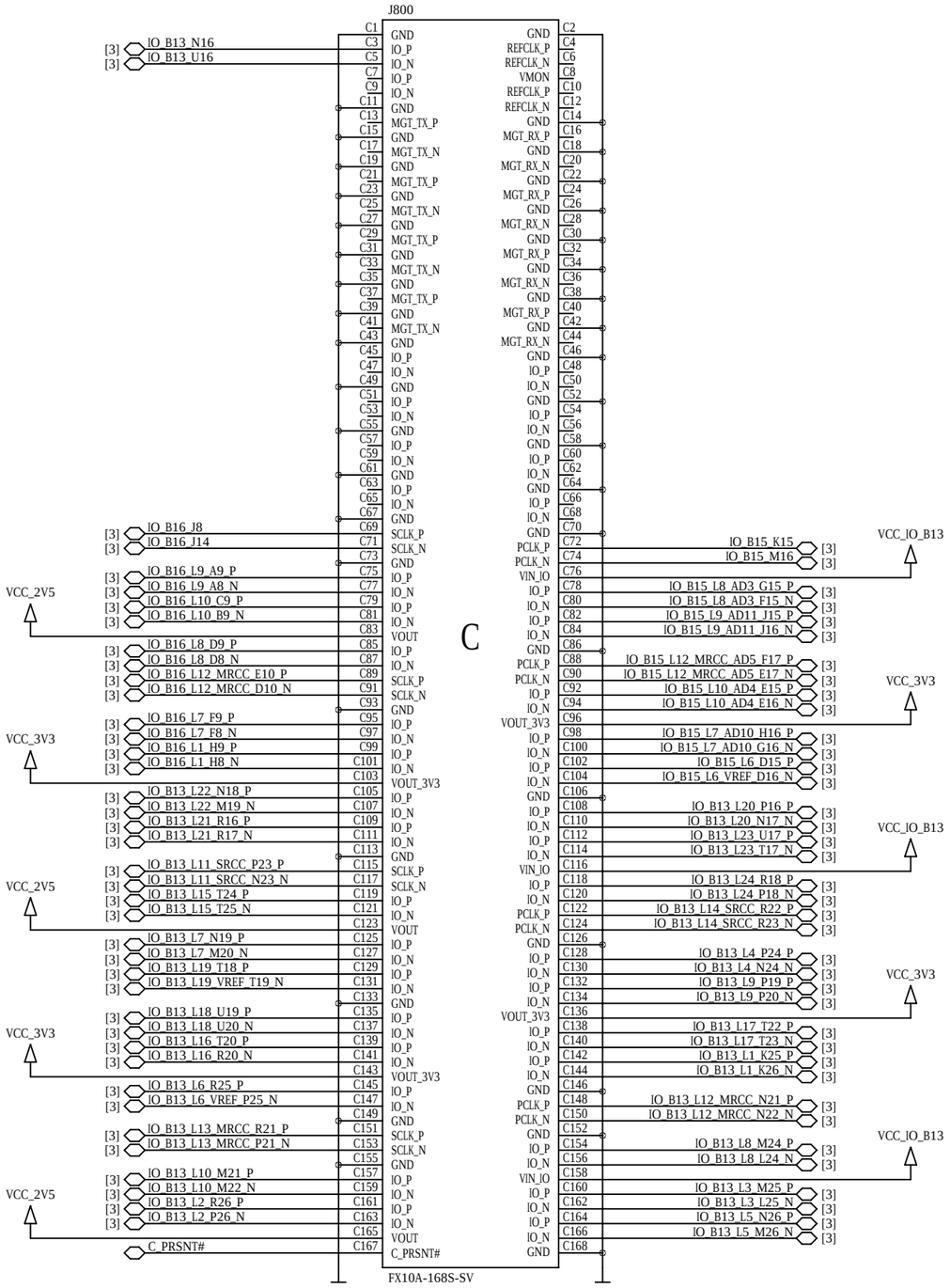

ENCLUSTRA	Copyright	© 2020 by Enclustra GmbH	Sheet Name	8_MODULE_CONNECTOR_C	Customer No	0000	Revision	R2.2	DNE = do not equip	Confidential
	Company	Enclustra GmbH	Project	Mercury+ KX2	Project No	430	Designed	MHEI	Date 4 Jun 2020	Sheet/sheets 8 / 21

100 MHz Oscillator

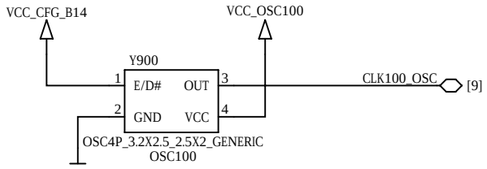

Clock Driver

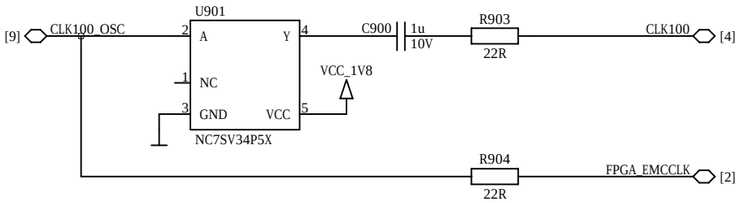

200 MHz Oscillator

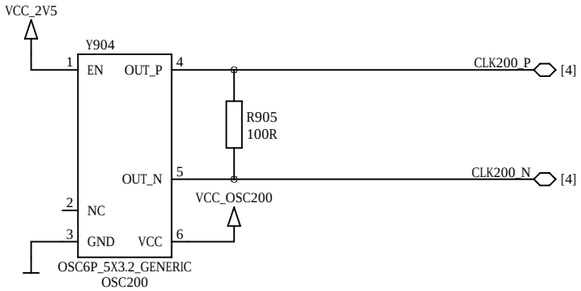

Oscillator Power Filters

not included in user schematics

This part is intentionally left blank.

Quad SPI Flash

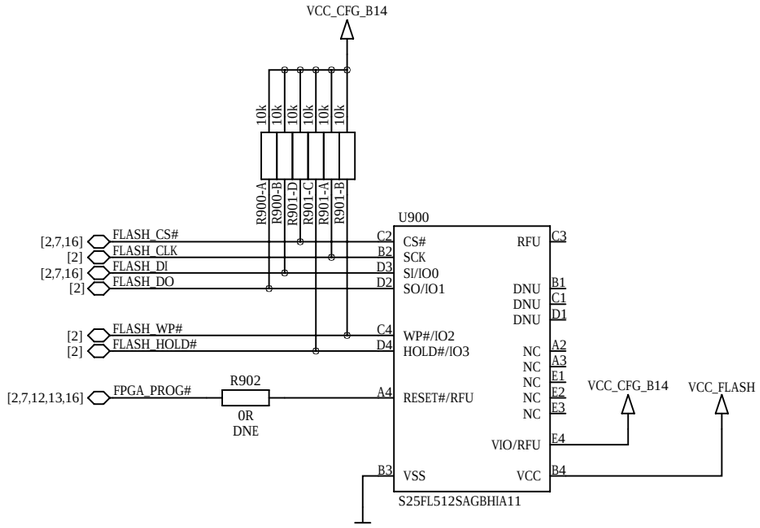

Flash Power

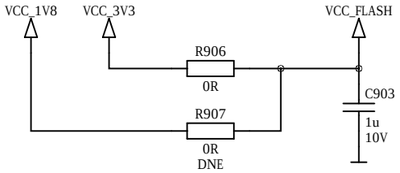

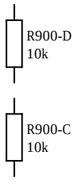

DDR3L SDRAM Bytes 0 - 1

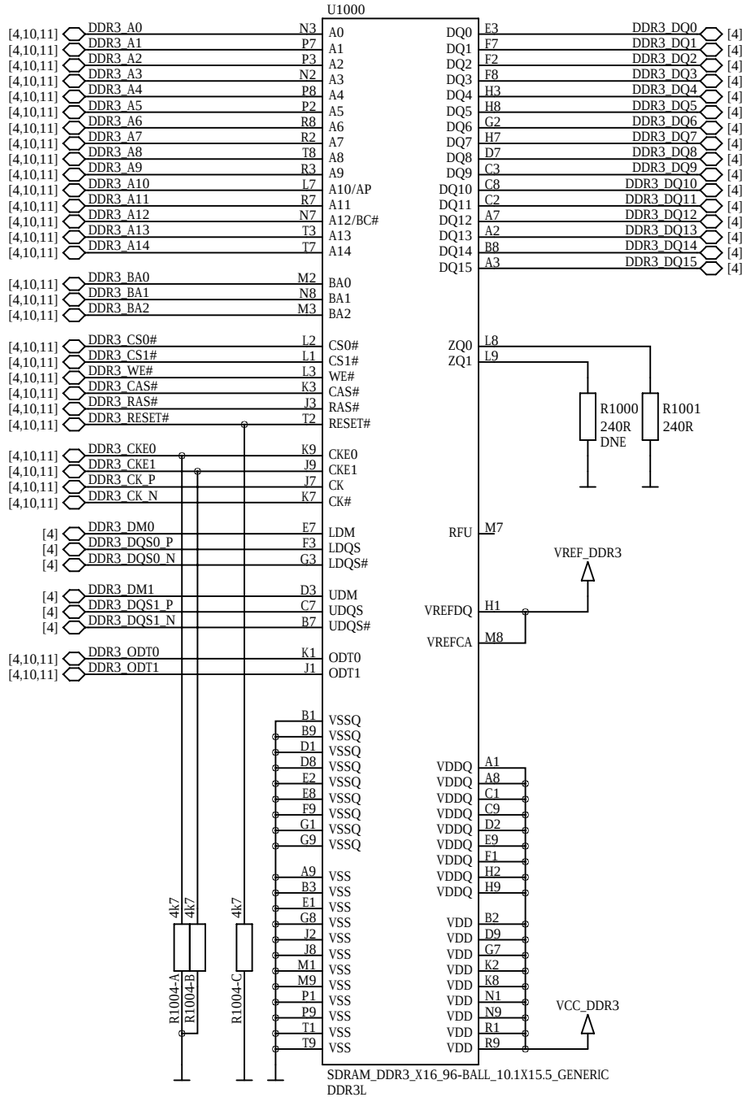

DDR3L SDRAM Bytes 2 - 3

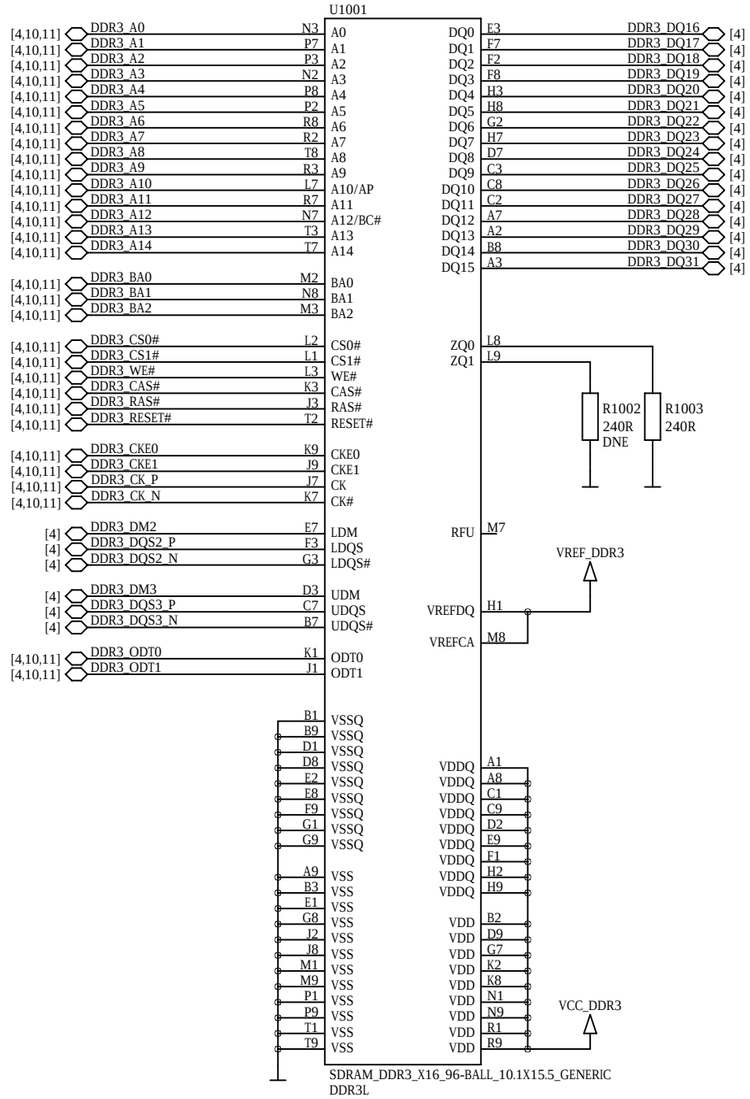

DDR3L Termination

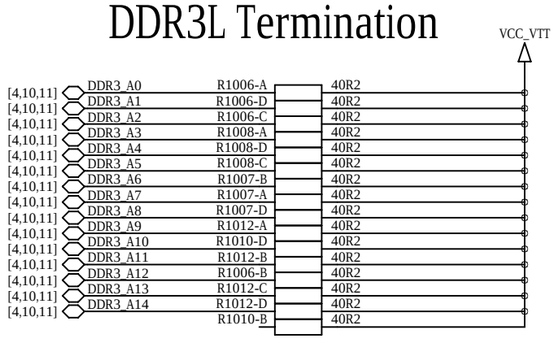

DDR3L Termination

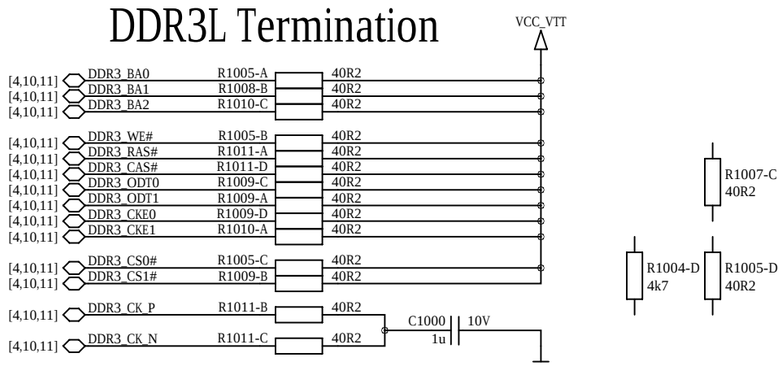

ENCLUSTRA	Copyright © 2020 by Enclustra GmbH	Sheet Name 10_DDR3L_SDRAM_0_3	Customer No 0000	Revision R2.2	DNE = do not equip	Confidential	
	Company Enclustra GmbH	Project Mercury+ KX2	Project No 430	Designed MHEI	Date 4 Jun 2020	Sheet/sheets 10 / 21	

DDR3L SDRAM Bytes 4 - 5

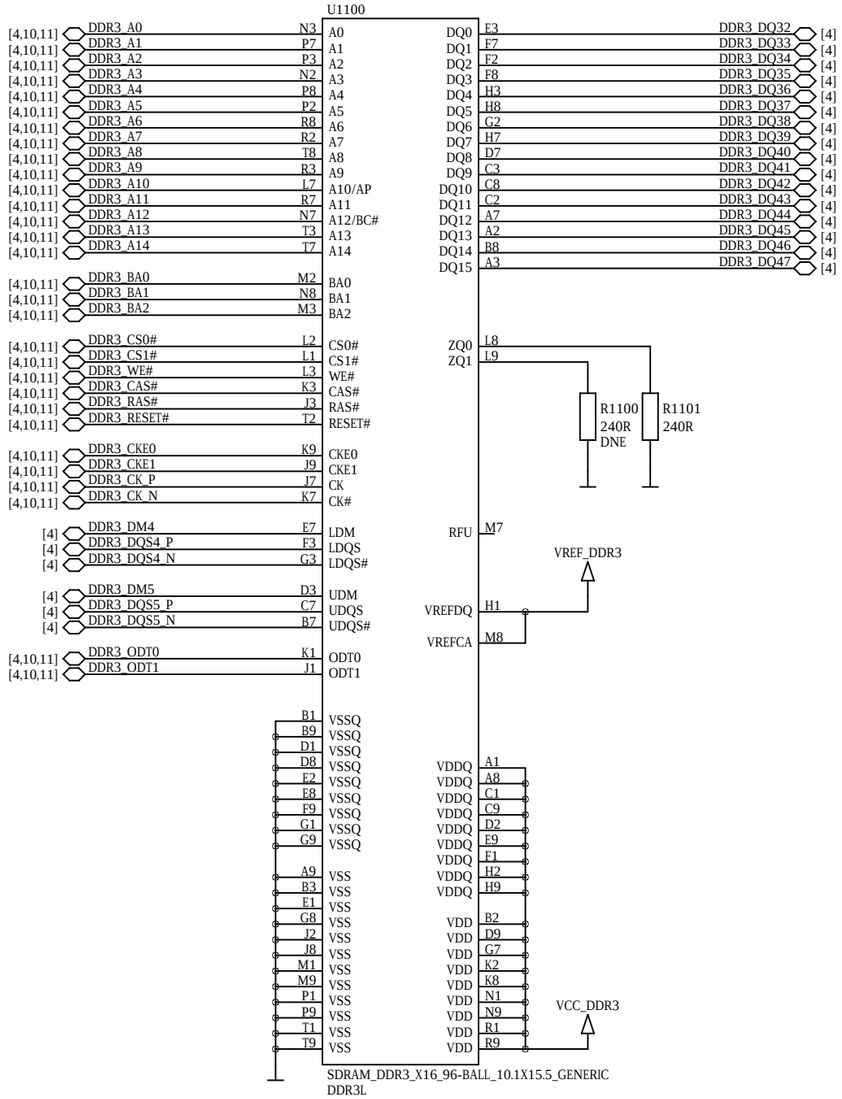

DDR3L SDRAM Bytes 6 - 7

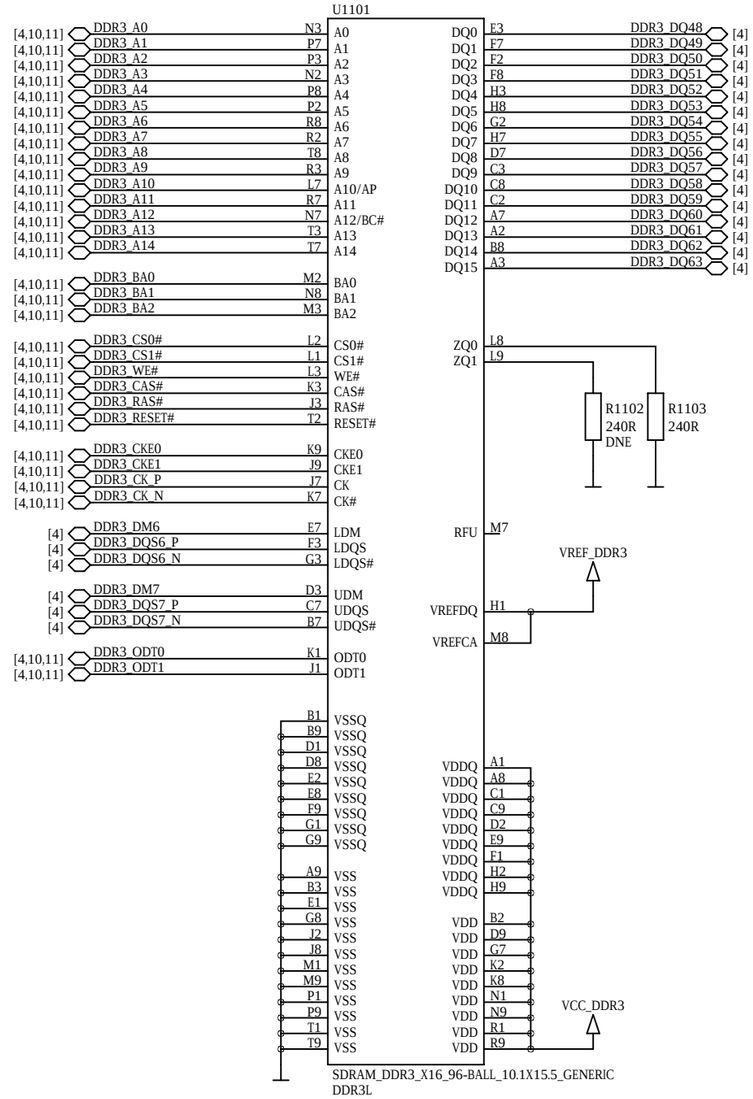

DDR3L Decoupling

not included in user schematics

This part is intentionally left blank.

ENCLUSTRA	Copyright © 2020 by Enclustra GmbH	Sheet Name 11_DDR3L_SDRAM_4_7	Customer No 0000	Revision R2.2	DNE = do not equip	Confidential	
	Company Enclustra GmbH	Project Mercury+ KX2	Project No 430	Designed MHEI	Date 4 Jun 2020	Sheet/sheets 11 / 21	

Gigabit Ethernet PHY 0

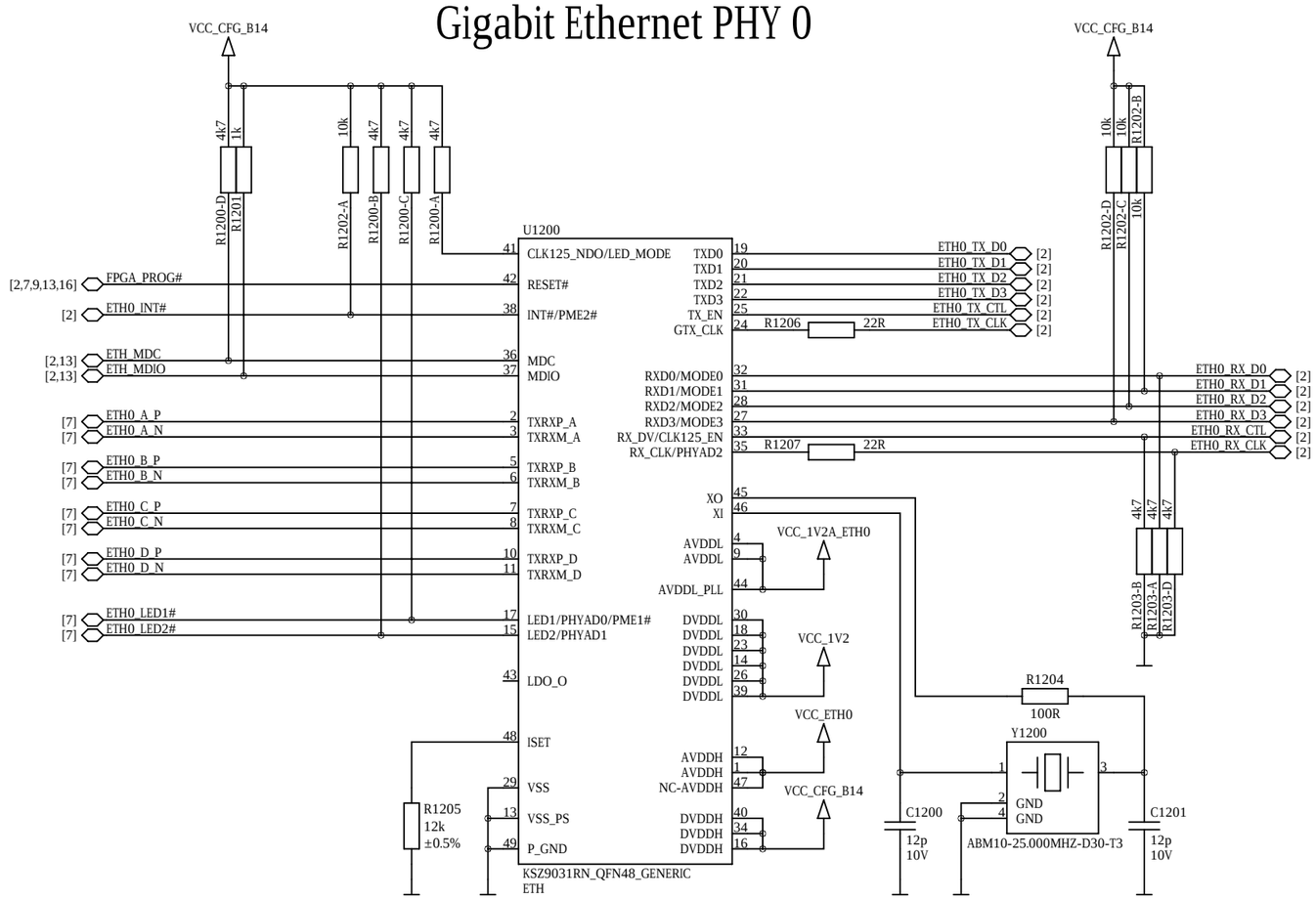

MODE<3:0> = 1110 -> RGMII, all capabilities
LED_Mode Pull up = Single LED
PhyAddress <2:0> = 011 -> 3
LED1 and LED2 are active low

Ethernet Power Filter

not included in user schematics

This part is intentionally left blank.

Gigabit Ethernet PHY 1

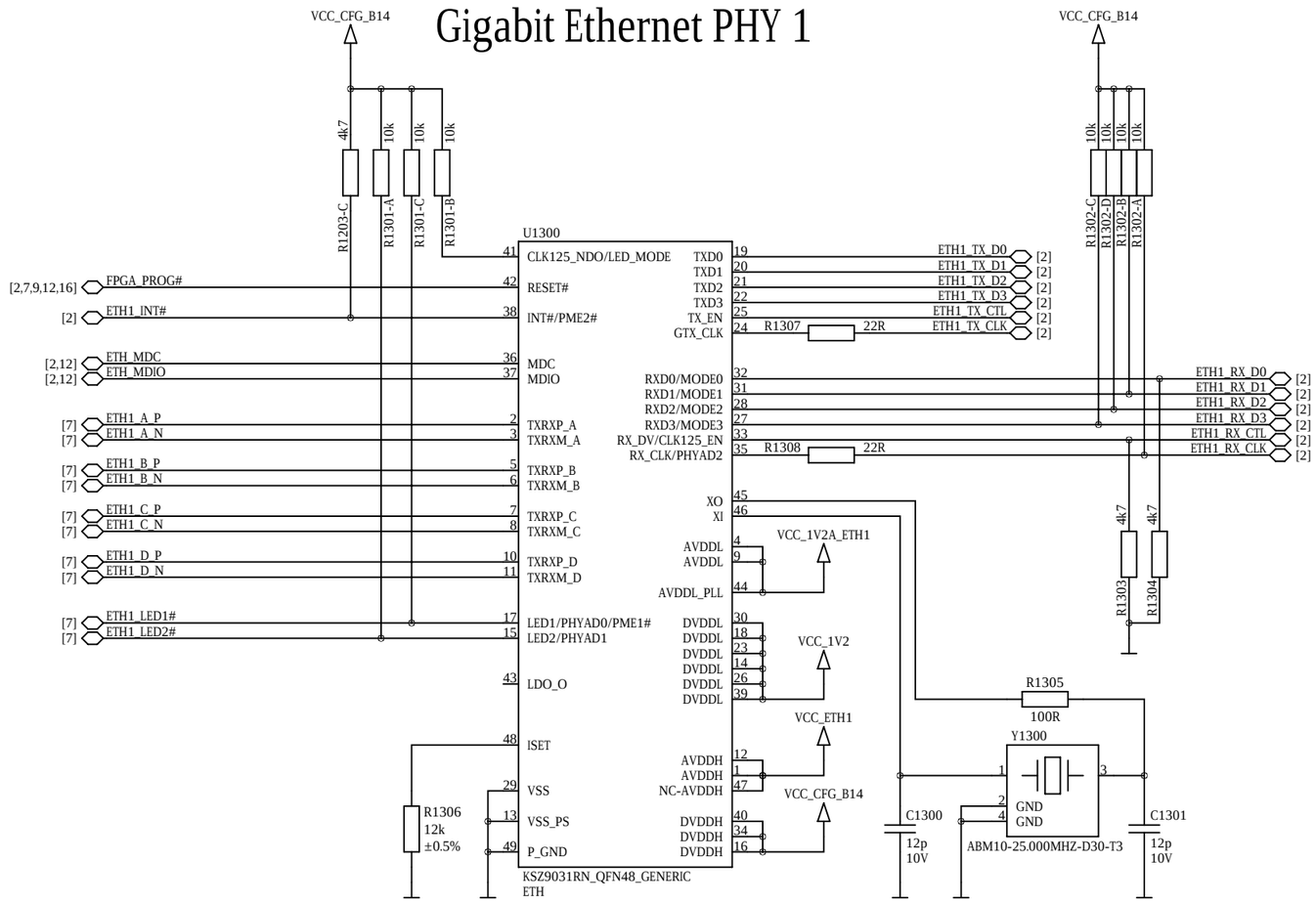

MODE<3:0> = 1110 -> RGMII, all capabilities
LED_Mode Pull up = Single LED
PhyAddress <2:0> = 111 -> 7
LED1 and LED2 are active low

Ethernet Power Filter

not included in user schematics

This part is intentionally left blank.

ENCLUSTRA	Copyright	© 2020 by Enclustra GmbH	Sheet Name	13_ETHERNET_PHY1	Customer No	0000	Revision	R2.2	DNE = do not equip	Confidential
	Company	Enclustra GmbH	Project	Mercury+ KX2	Project No	430	Designed	MHEI	Date 4 Jun 2020	Sheet/sheets 13 / 21

User LEDs

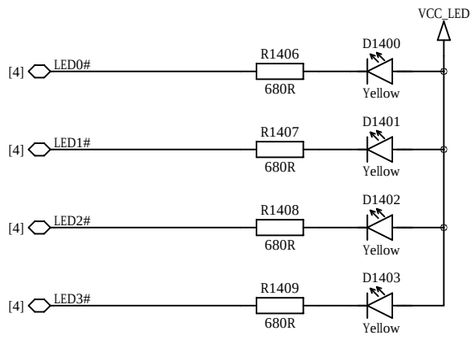

I2C Level Shifter

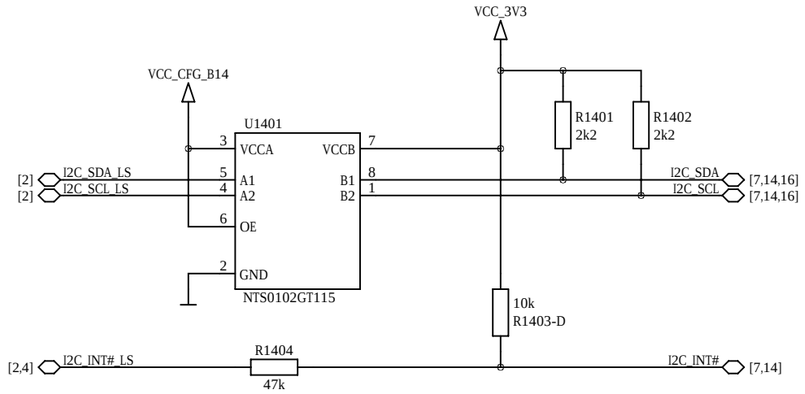

Secure EEPROMs

for Enclustra use only

only one EEPROM can be mounted

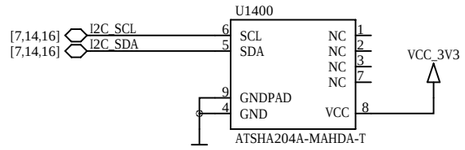

I2C Address: 1 1 0 0 1 0 0 Rw

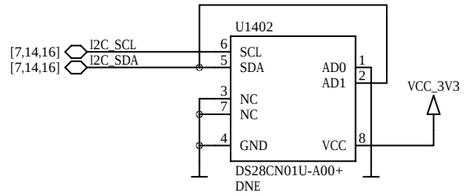

I2C Address: 1 0 1 1 1 0 0 Rw

LED Power

not included in user schematics

This part is intentionally left blank.

Real-time Clock

optional

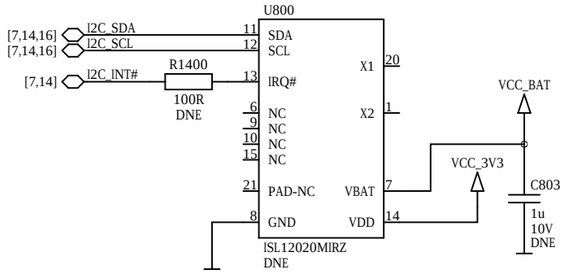

I2C Addresses:
Registers: 1 1 0 1 1 1 1 Rw
User SRAM: 1 0 1 0 1 1 1 Rw

ENCLUSTRA	Copyright	© 2020 by Enclustra GmbH	Sheet Name	14_I2C_LEDS_EEPROM	Customer No	0000	Revision	R2.2	DNE = do not equip	Confidential
	Company	Enclustra GmbH	Project	Mercury+ KX2	Project No	430	Designed	MHEI	Date 4 Jun 2020	Sheet/sheets 14 / 21

FTDI USB 2.0 Device Controller

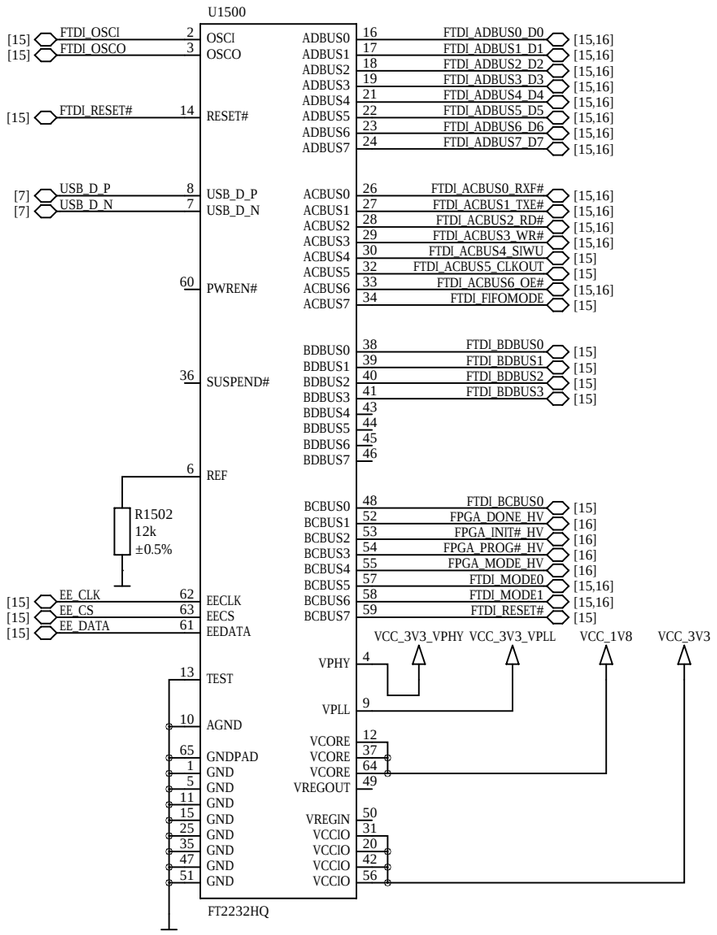

JTAG Adapter

not included in user schematics

This part is intentionally left blank.

FTDI EEPROM

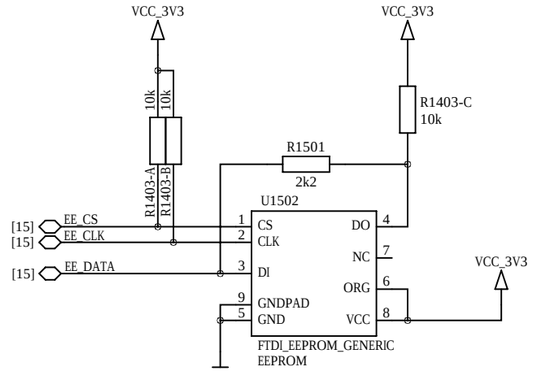

FTDI Resistors

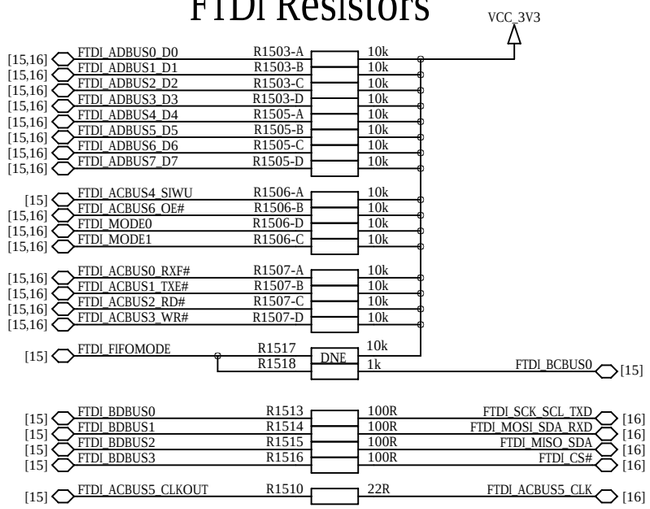

FTDI Power Filters

This part is intentionally left blank.

FTDI Reset

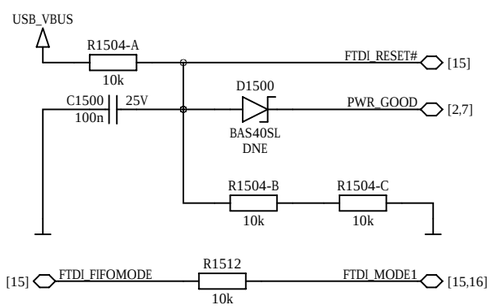

FTDI Clock

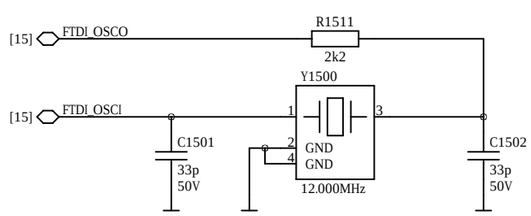

Configuration Multiplexers

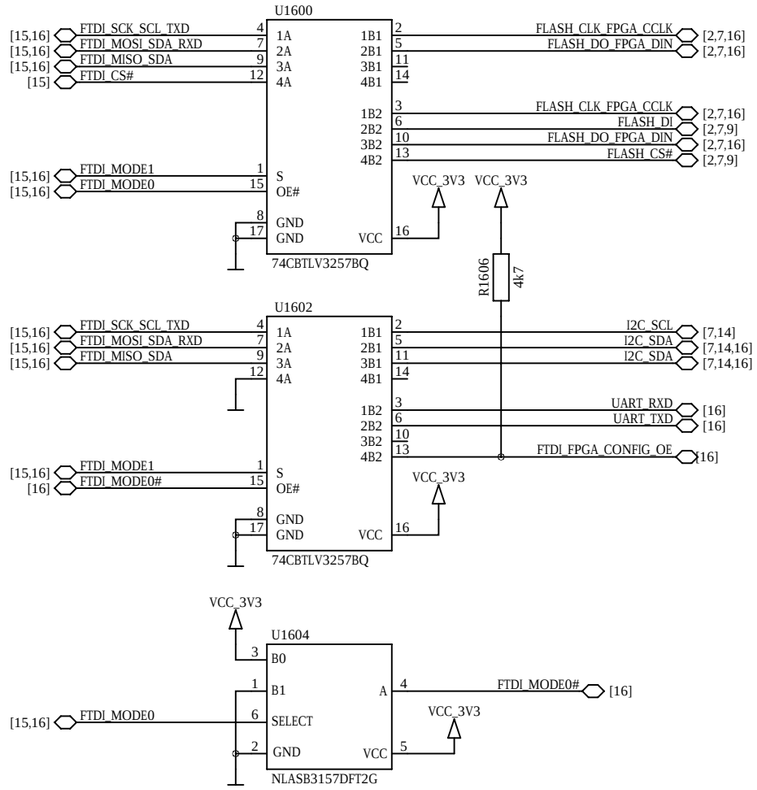

FTDI Status Level Shifters

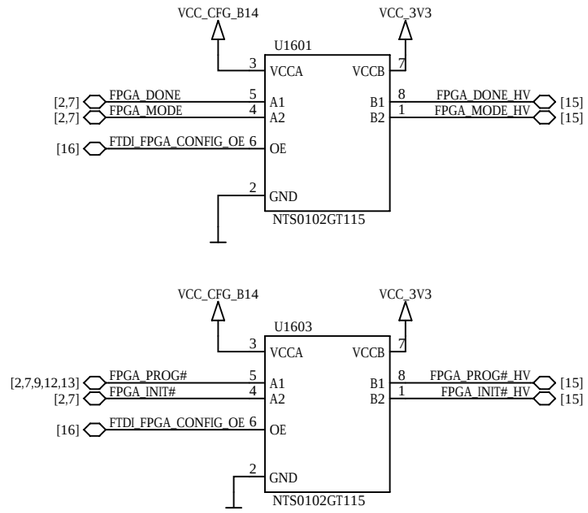

FTDI FIFO Level Shifters

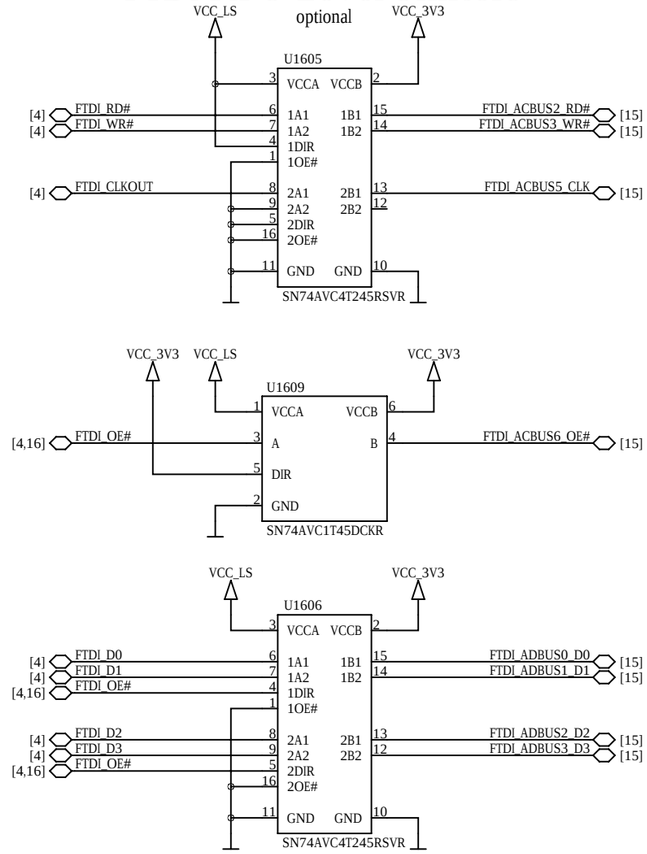

FTDI UART Level Shifters

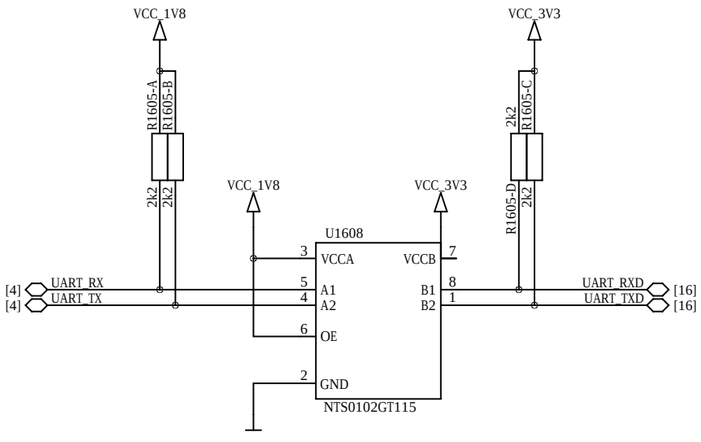

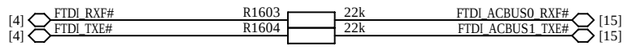

Level Shifter Power

not included in user schematics

This part is intentionally left blank.

DC/DC Converter 3.3V 9A 5%

not included in user schematics

This part is intentionally left blank.

Supported Voltage Ranges

Power Rail	Direction	Range	Tolerance
VCC_MOD	input	5.0V - 15V	±5%
VCC_IO_B12	input	1.0V - 3.3V	±5%
VCC_IO_B13	input	1.0V - 3.3V	±5%
VCC_IO_B15	input	1.0V - 3.3V	±5%
VCC_IO_B16	input	1.8V - 3.3V	±5%
VCC_CFG_B14	input	1.8, 2.5V - 3.3V	±5%
VCC_BAT	input	2.0V - 3.6V	-
VCC_1V8	output	1.8V	±5%
VCC_2V5	output	2.5V	±5%
VCC_3V3	output	3.3V	±5%

DC/DC Converter 1.0V 20A 3%

not included in user schematics

This part is intentionally left blank.

Input Power Filter

not included in user schematics

This part is intentionally left blank.

Dual DC/DC Converter

channel 1: 1.35V/1.5V 2A 5%

channel 2: 2.5V 2A 5%

not included in user schematics

This part is intentionally left blank.

LDO 2.0V 0.5A

only assembled for FPGA in FFG package

not included in user schematics

This part is intentionally left blank.

DDR3 Voltage Selection

	DDR3_VSEL	VCC_DDR3
Default	"Z"	1.5V
	"0"	1.35V
	"1"	Illegal

Dual DC/DC Converter

channel 1: 1.2V 2A 2.8%

channel 2: 1.8V 2A 3%

not included in user schematics

This part is intentionally left blank.

IO Voltage Generation

when C connector is not present on base board

not included in user schematics

This part is intentionally left blank.

DDR3 Termination Voltage Regulator

not included in user schematics

This part is intentionally left blank.

VREF DDR3

not included in user schematics

This part is intentionally left blank.

Module Mounting Holes

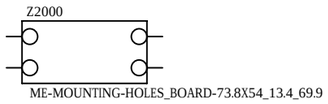

Fiducials

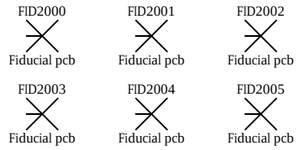

Heat Sink Mounting Holes M2

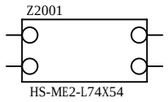

Panel Fiducials

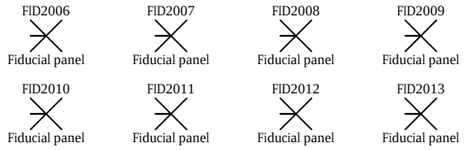

FPGA Heat Sink

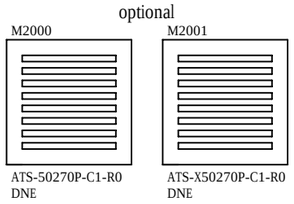

PCB / Logo / Pin-1 Marking / Text

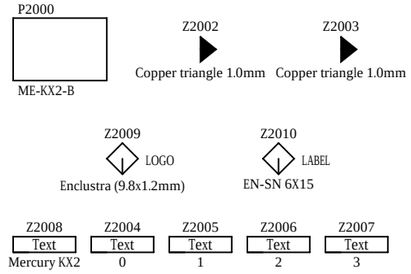

Component Variants

FPGA	DDR3L		Ethernet PHY	OSC100	OSC200	EEPROM	L0U68	L1U	LDO2V0
Part U200A XC7K160T-1FBG676C EN100565	Part U1000A NT5CC128M16IP-DI EN100912	Part U1100A NT5CC128M16IP-DI EN100912	Part U1200A KSZ9031RNXCA EN100202	Part Y900A ASDMB-100.000MHZ-LY-T EN100284	Part Y904A:1 DSC1123CI2-200.0000T EN101130	Part U1502A 93AA66C-I/MS EN100279	Part L1700A 0u68 EN100848	Part L1801A 1u EN100784	U1802/R1811
Part U200B XC7K160T-2FFG676I EN101565	Part U1000B:1 H5TC4G63CFR-RDI EN101580	Part U1100B:1 H5TC4G63CFR-RDI EN101580	Part U1200B KSZ9031RNXIA EN101934	Part Y900B ASEMB-100.000MHZ-LY-T EN101056	Part Y904A:2 ASDMPLV-200.000MHZ-LR-T EN100881		Part L1700B 1u EN100436	Part L1801B 1u0 EN103059	
Part U200C XC7K325T-2FFG676I EN100566	Part U1000B:2 NT5CC256M16DP-EKI EN101581	Part U1100B:2 NT5CC256M16DP-EKI EN101581	Part U1300A KSZ9031RNXCA EN100202		Part Y904B ASEMPLV-200.000MHZ-LR EN100880			Part L1803A 1u EN100784	
Part U200D XC7K410T-2FFG676I EN100571	Part U1000B:3 K4B4G1646E-BMMA EN102238	Part U1100B:3 K4B4G1646E-BMMA EN102238	Part U1300B KSZ9031RNXIA EN101934					Part L1803B 1u0 EN103059	
	Part U1001A NT5CC128M16IP-DI EN100912	Part U1101A NT5CC128M16IP-DI EN100912						Part L1901A 1u EN100784	
	Part U1001B:1 H5TC4G63CFR-RDI EN101580	Part U1101B:1 H5TC4G63CFR-RDI EN101580						Part L1901B 1u0 EN103059	
	Part U1001B:2 NT5CC256M16DP-EKI EN101581	Part U1101B:2 NT5CC256M16DP-EKI EN101581						Part L1903A 1u EN100784	
	Part U1001B:3 K4B4G1646E-BMMA EN102238	Part U1101B:3 K4B4G1646E-BMMA EN102238						Part L1903B 1u0 EN103059	

Assembly Variants

Assembly Variant	FPGA	DDR3L	Ethernet PHY	OSC100	OSC200	EEPROM	L0U68	L1U	LDO2V0
Variant EN101775:0 ME-KX2-160-1C-D10-R2	Option EN101775:1 FPGA EN100565	Option EN101775:2 DDR3L EN100912	Option EN101775:3 ETH EN101934	Option EN101775:4 OSC100 EN100284	Option EN101775:5 OSC200 EN101130	Option EN101775:6 EEPROM EN100279	Option EN101775:7 L0U68 EN100848	Option EN101775:8 L1U EN100784	Option EN101775:9 LDO2V0 DNE
Variant EN101776:0 ME-KX2-160-2I-D11-P-R2	Option EN101776:1 FPGA EN101565	Option EN101776:2 DDR3L EN101580	Option EN101776:3 ETH EN101934	Option EN101776:4 OSC100 EN100284	Option EN101776:5 OSC200 EN101130	Option EN101776:6 EEPROM EN100279	Option EN101776:7 L0U68 EN100848	Option EN101776:8 L1U EN100784	Option EN101776:9 LDO2V0
Variant EN101777:0 ME-KX2-325-2I-D11-P-R2	Option EN101777:1 FPGA EN100566	Option EN101777:2 DDR3L EN102238	Option EN101777:3 ETH EN101934	Option EN101777:4 OSC100 EN100284	Option EN101777:5 OSC200 EN101130	Option EN101777:6 EEPROM EN100279	Option EN101777:7 L0U68 EN100848	Option EN101777:8 L1U EN100784	Option EN101777:9 LDO2V0
Variant EN101778:0 ME-KX2-410-2I-D11-P-R2	Option EN101778:1 FPGA EN100571	Option EN101778:2 DDR3L EN102238	Option EN101778:3 ETH EN101934	Option EN101778:4 OSC100 EN100284	Option EN101778:5 OSC200 EN101130	Option EN101778:6 EEPROM EN100279	Option EN101778:7 L0U68 EN100848	Option EN101778:8 L1U EN100784	Option EN101778:9 LDO2V0