Enclustra User Schematics

Mars MA3 Revision 2.1

Disclaimer

User schematics do not include proprietary Enclustra design elements, such as power supply circuits.
These circuits use optimized designs which are extremely compact and remain proprietary to Enclustra.
The user manual provides all necessary information to use the module and its interfaces.

User schematics are provided after purchase of Enclustra hardware, and may also be provided in certain cases before purchase, to assist in product evaluation.
No part of the schematics may be copied or modified without written permission from Enclustra.

Full schematics, including a full bill-of-materials, may be available through the purchase of a hardware licence for the product in question.
Please contact Enclustra Sales for more information.

Note: DNE = Do Not Equip (parts not equipped by default)

© Enclustra GmbH

Mars MA3 SoC Module

Revision 2.1

Sheet 1: Cover
Sheet 2: FPGA Configuration
Sheet 3: FPGA Banks L0/L1/3A/3B/4A/5A/5B/8A
Sheet 4: FPGA Banks 6/7 (HPS)
Sheet 5: FPGA Power
Sheet 6: Power Decoupling
Sheet 7: SO-DIMM Module Connector
Sheet 8: DDR3L SDRAM
Sheet 9: QSPI Flash | eMMC Flash
Sheet 10: Clock | Real-time Clock
Sheet 11: Gigabit Ethernet PHY | Fast Ethernet PHY
Sheet 12: USB 2.0 PHY | User LEDs
Sheet 13: Power 1.1V | 1.2V | 1.8V
Sheet 14: Power 1.35V | 2.5V
Sheet 15: Mechanics
Sheet 16: Assembly Variants

Boot Mode Selection

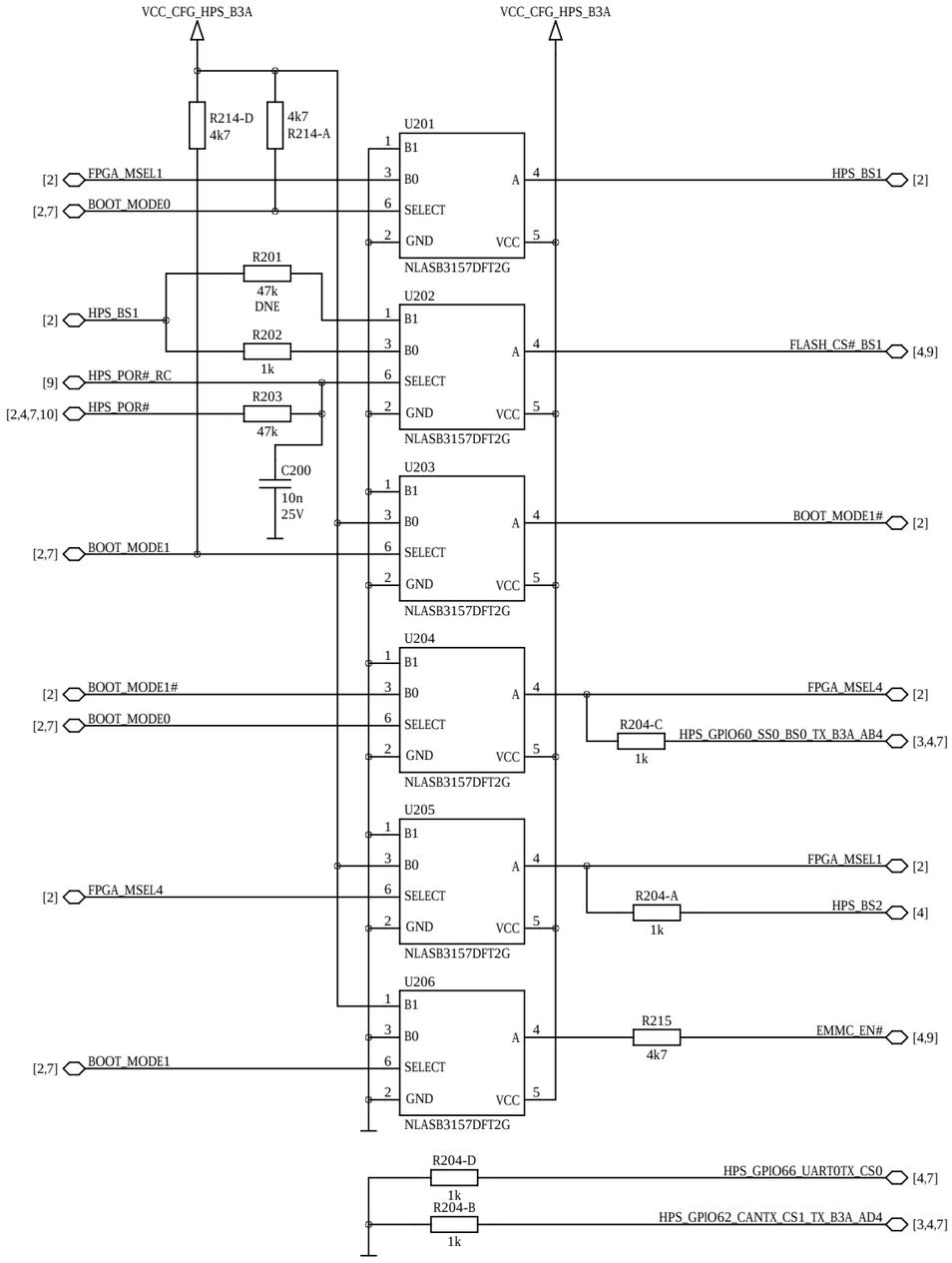

FPGA Configuration

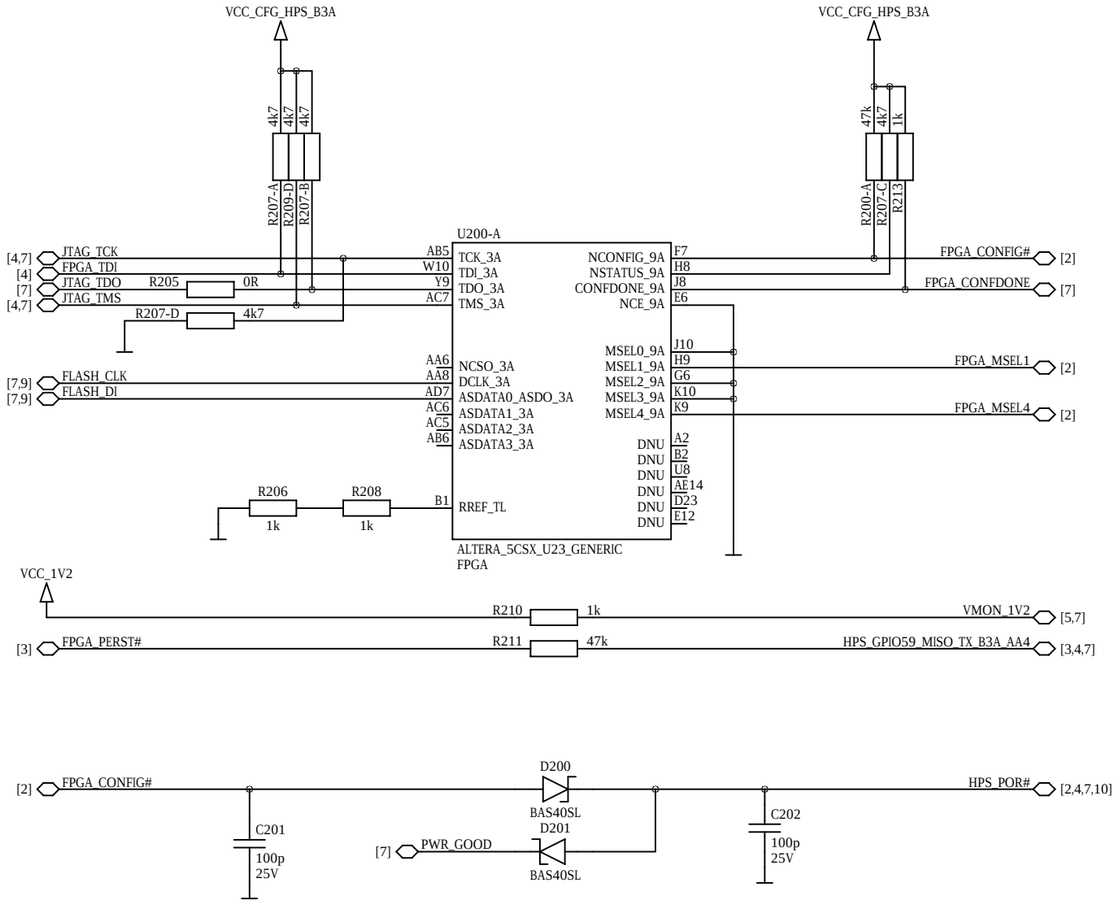

Boot Modes

	Boot Mode		Configuration		Mode Straps		
	1	0	HPS boot	FPGA boot	MSEL	CSEL	BSEL
reserved	0	0	from FPGA	passive serial	10000	00	001
	0	1	eMMC	from HPS	00010	00	100
	1	0	QSPI	from HPS	00010	00	110
Default	1	1	SDIO	from HPS	00010	00	100

FPGA MGT Bank L0

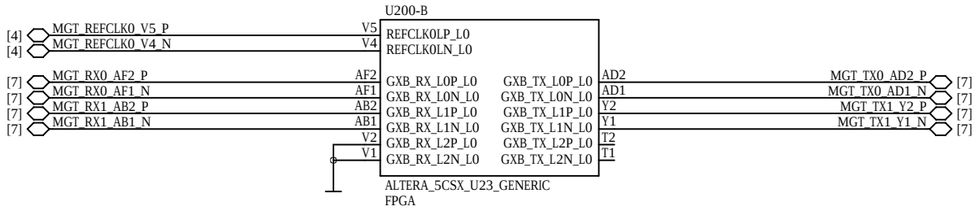

FPGA MGT Bank L1

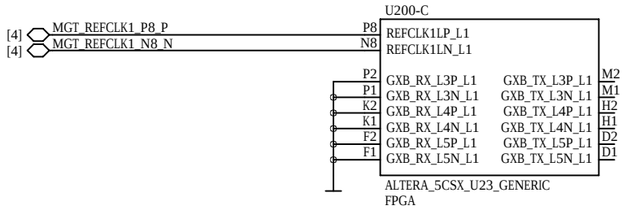

FPGA Bank 4A

VCCIO = VCC_IO_B3B_B4A

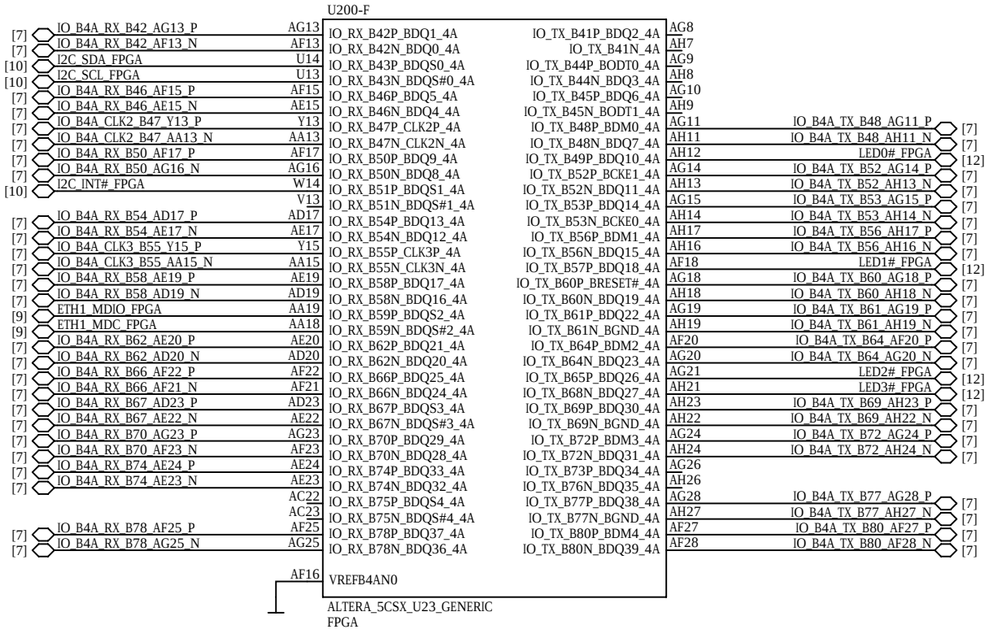

FPGA Bank 3A

VCCIO = VCC_CFG_HPS_B3A

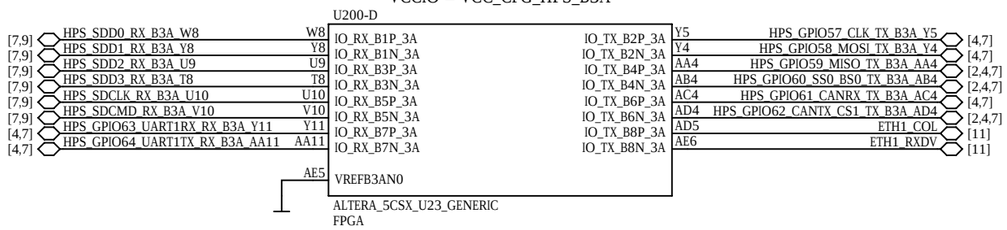

FPGA Bank 3B

VCCIO = VCC_IO_B3B_B4A

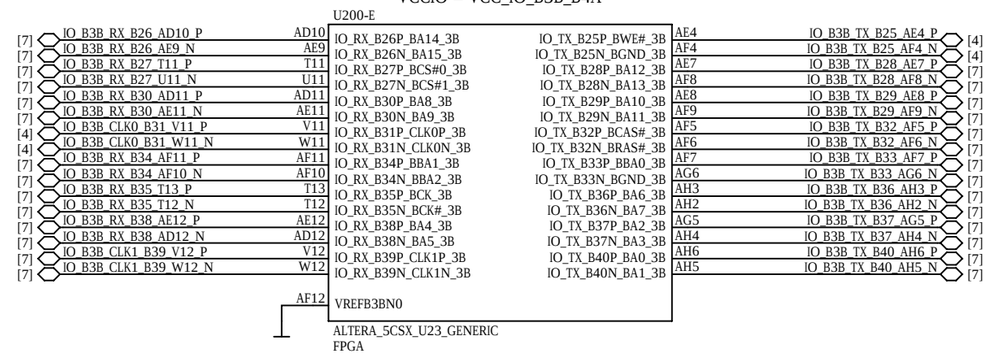

FPGA Bank 5A

VCCIO = VCC_1V8

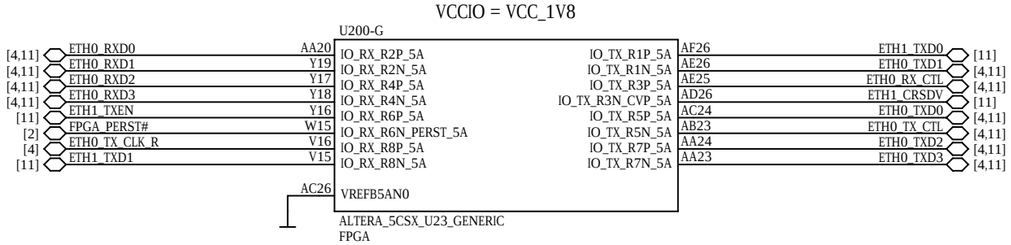

FPGA Bank 5B

grounded for compatibility with 5CSE devices

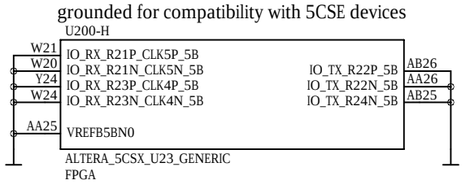

FPGA Bank 8A

VCCIO = VCC_1V8

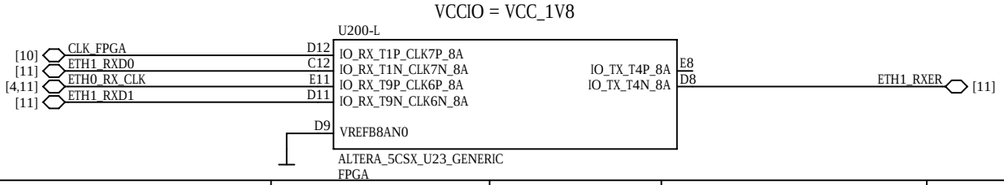

ENCLUSTRA	Copyright	© 2018 by Enclustra GmbH	Sheet Name	3_FPGA_BANK_L0/L1/3/4/5/8	Customer No	0000	Revision	R2.1	DNE = do not equip	Confidential
	Company	Enclustra FPGA Solution Center	Project	Mars MA3	Project No	442	Designed	MHEI	Date 13 Aug 2018	Sheet/sheets 3 / 16

FPGA HPS Bank 6A

VCCIO = VCC_1V35

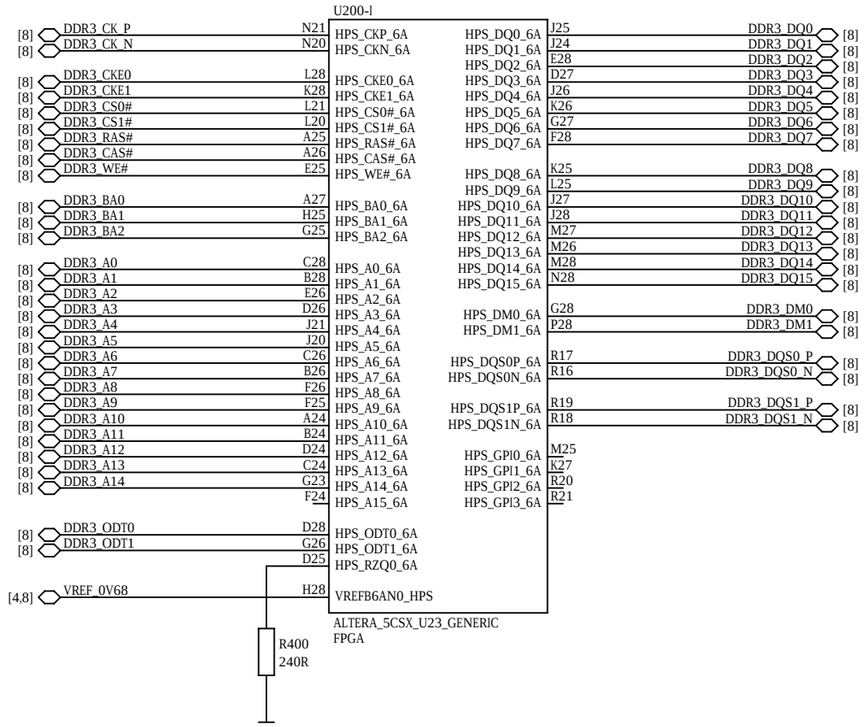

FPGA HPS Bank 6B

VCCIO = VCC_1V35

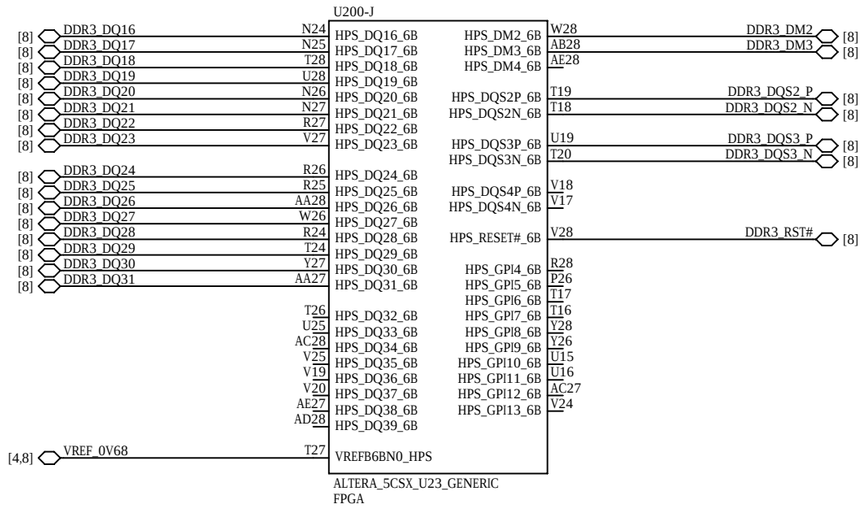

FPGA HPS Bank 7

VCCIO_A = VCC_CFG_HPS_B3A

VCCIO_B = VCC_1V8

VCCIO_C = VCC_1V8

VCCIO_D = VCC_1V8

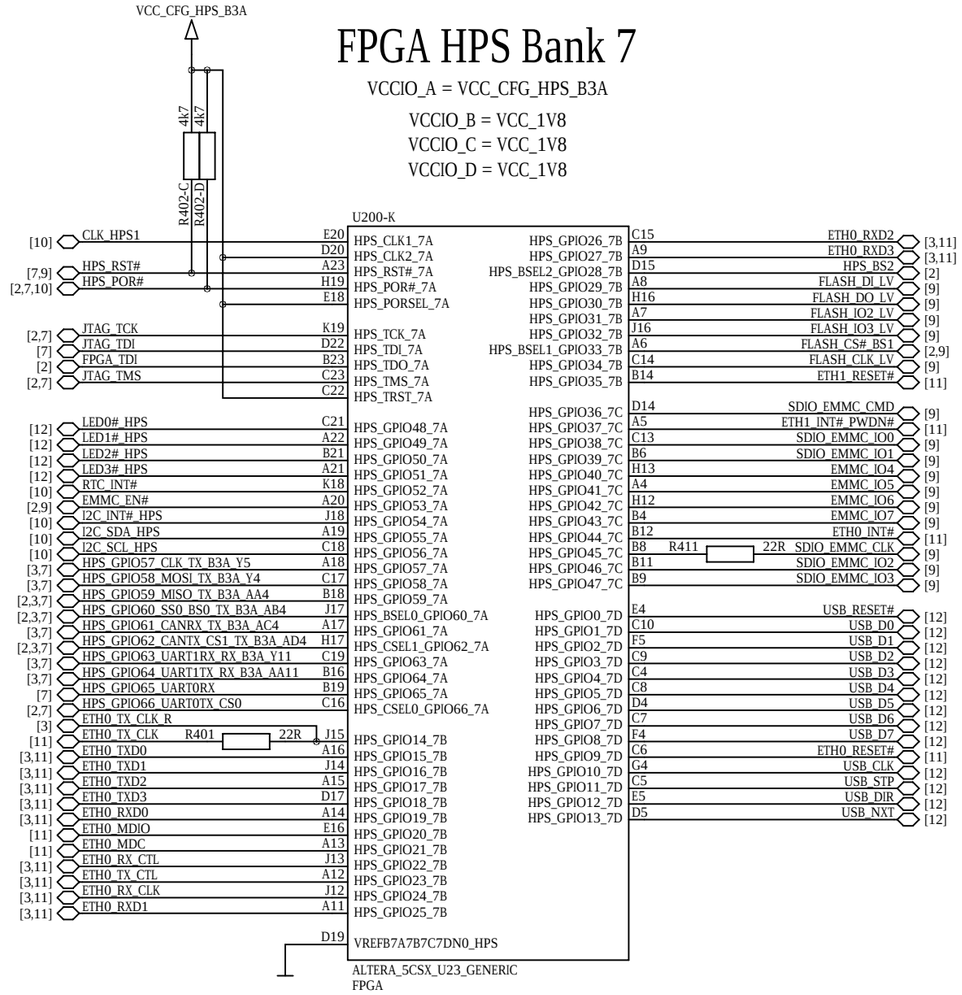

REFCLK / IO Routing

MGT_REFCLK on 5CSX devices, IO_B3B on 5CSE devices

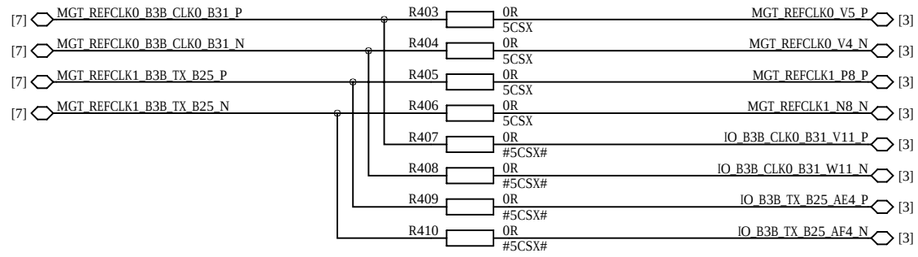

ENCLUSTRA	Copyright	© 2018 by Enclustra GmbH	Sheet Name	4_FPGA_BANK6/7	Customer No	0000	Revision	R2.1	DNE = do not equip	Confidential
	Company	Enclustra FPGA Solution Center	Project	Mars MA3	Project No	442	Designed	MHEI	Date 13 Aug 2018	Sheet/sheets 4 / 16

FPGA Ground

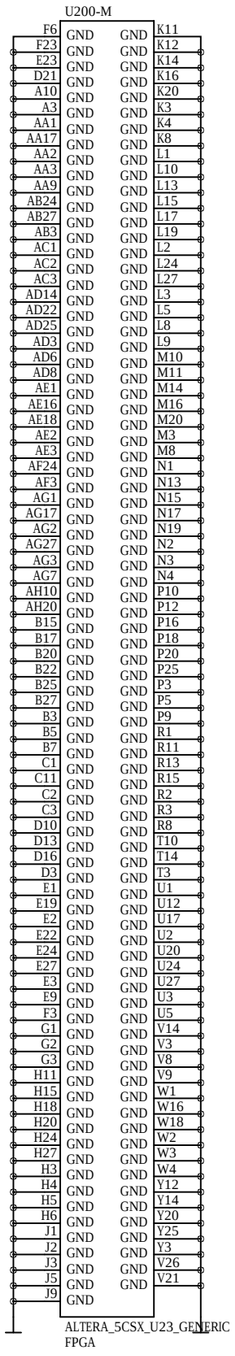

FPGA Power

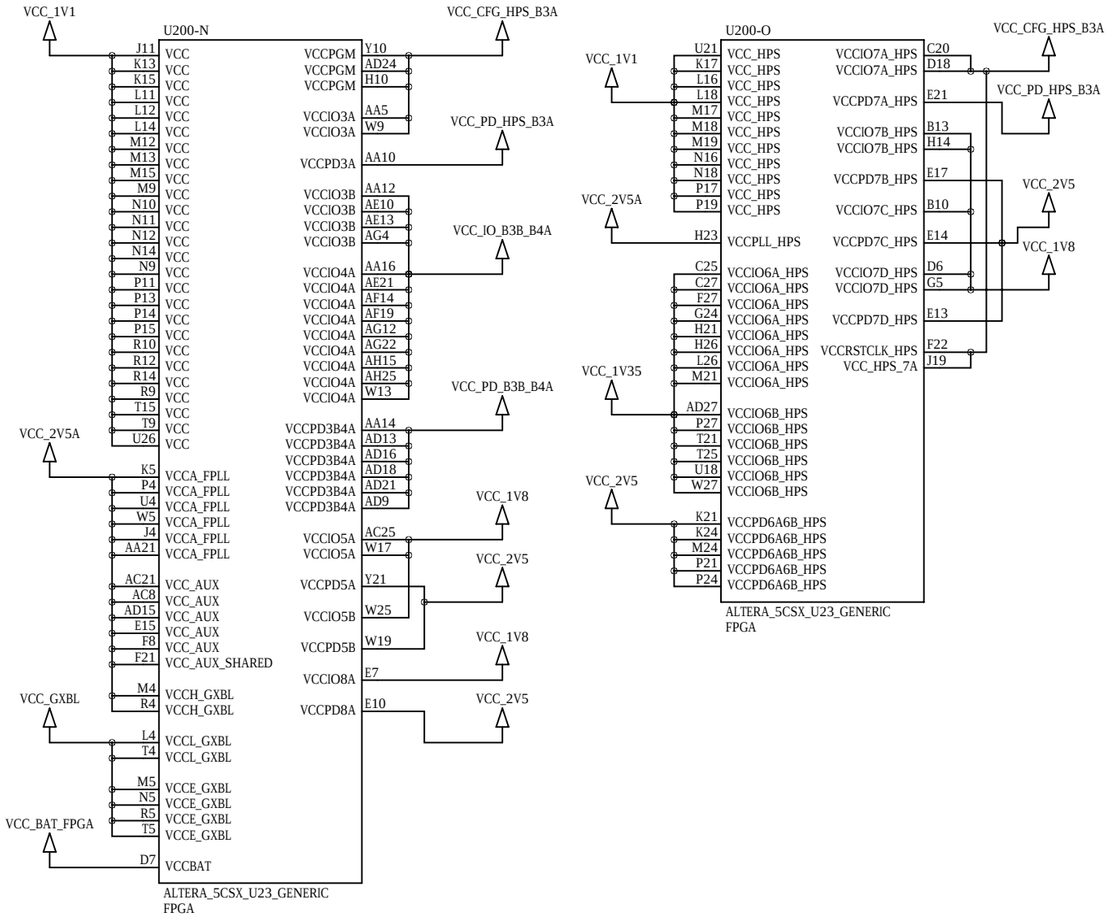

FPGA Battery Voltage

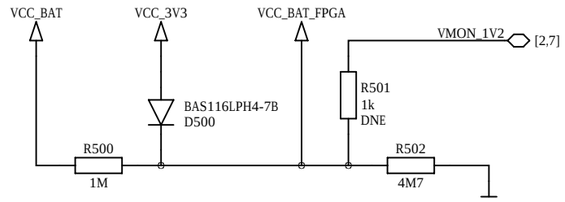

FPGA PLL Filters

not included in user schematics

This part is intentionally left blank.

ENCLUSTRA	Copyright	© 2018 by Enclustra GmbH	Sheet Name	5_FPGA_POWER	Customer No	0000	Revision	R2.1	DNE = do not equip	Confidential
	Company	Enclustra FPGA Solution Center	Project	Mars MA3	Project No	442	Designed	MHEI	Date 13 Aug 2018	Sheet/sheets 5 / 16

FPGA Decoupling

not included in user schematics

This part is intentionally left blank.

Power Decoupling

not included in user schematics

This part is intentionally left blank.

SO-DIMM Connector

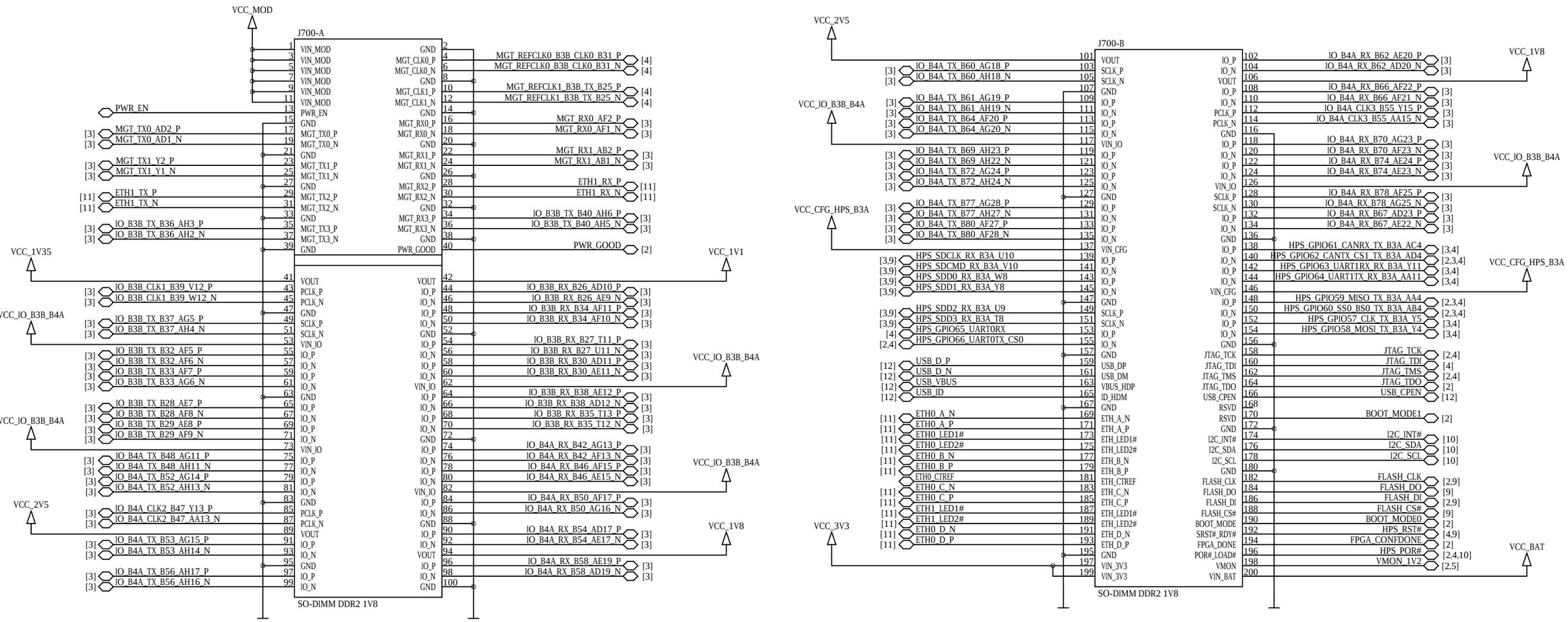

ENCLUSTRA	Copyright © 2018 by Enclustra GmbH	Sheet Name 7_MODULE_CONNECTOR	Customer No 0000	Revision R2.1	DNE = do not equip	Confidential	
	Company Enclustra FPGA Solution Center	Project Mars MA3	Project No 442	Designed MHEI	Date 13 Aug 2018	Sheet/sheets 7 / 16	

DDR3L SDRAM Bytes 0-1

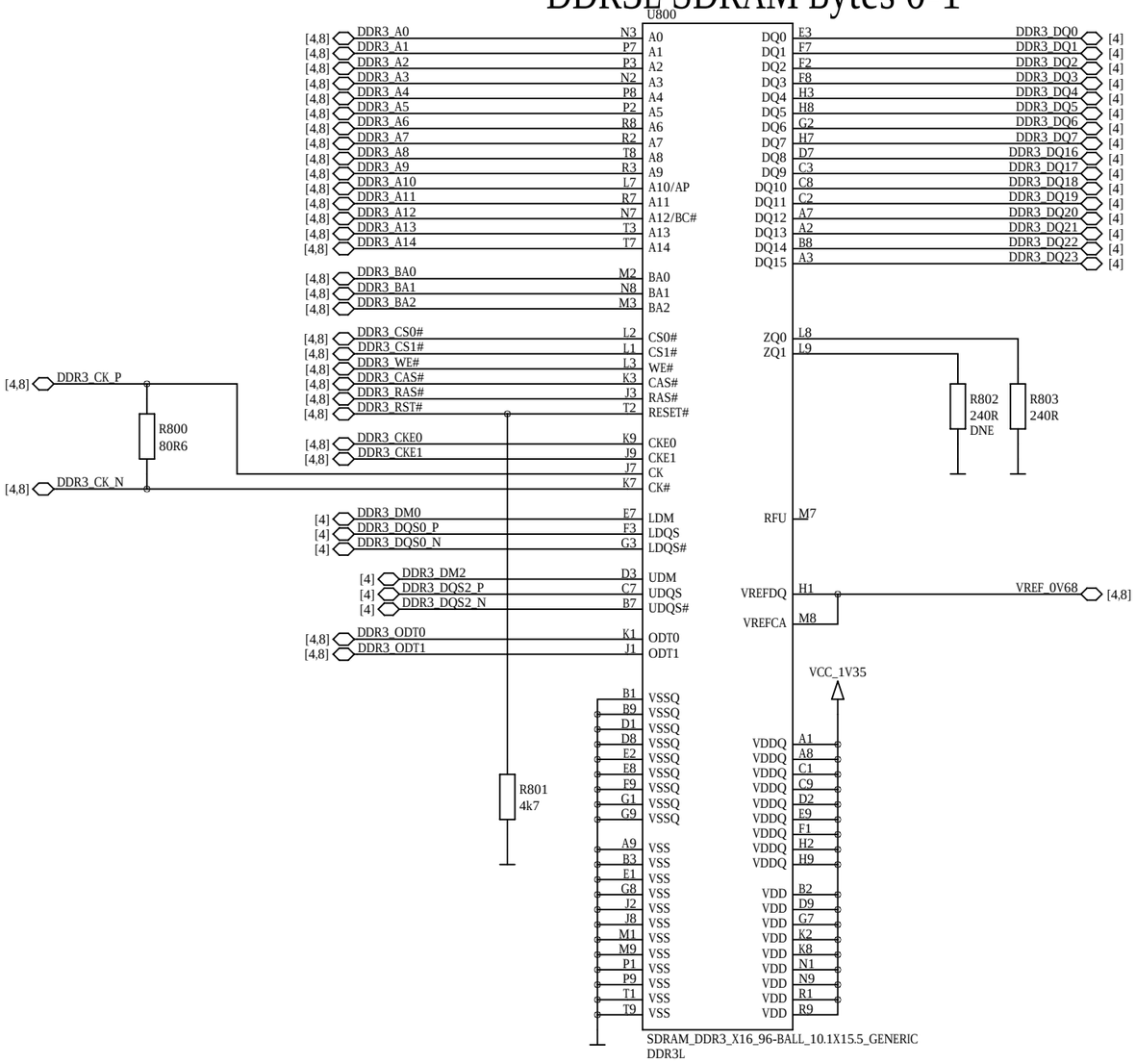

DDR3L SDRAM Bytes 2-3

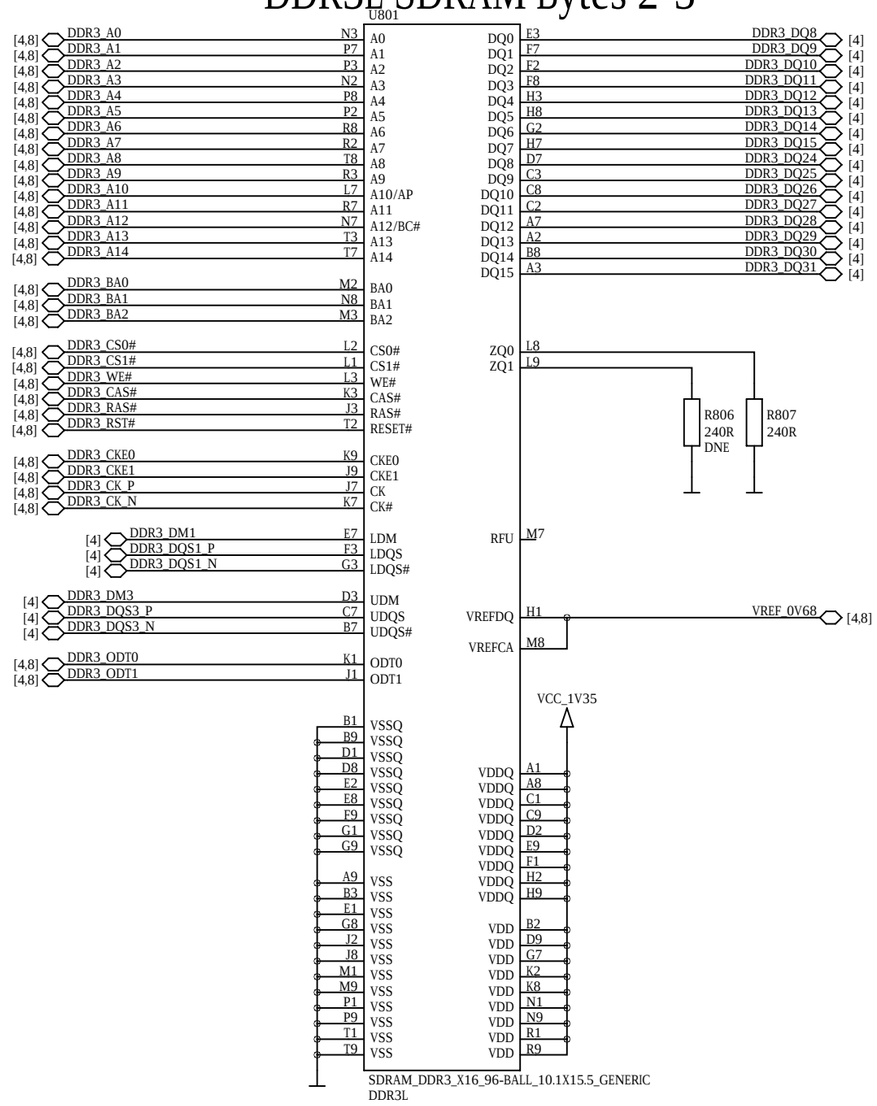

DDR3L Decoupling

not included in user schematics

This part is intentionally left blank.

DDR3L VREF Generation

not included in user schematics

This part is intentionally left blank.

Quad SPI Flash

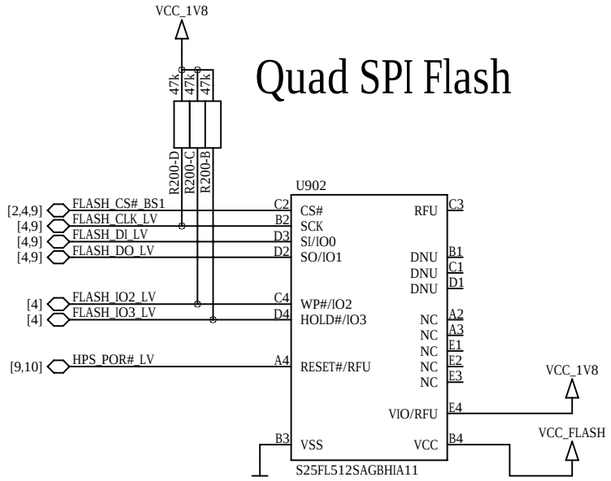

Flash Level Shifter

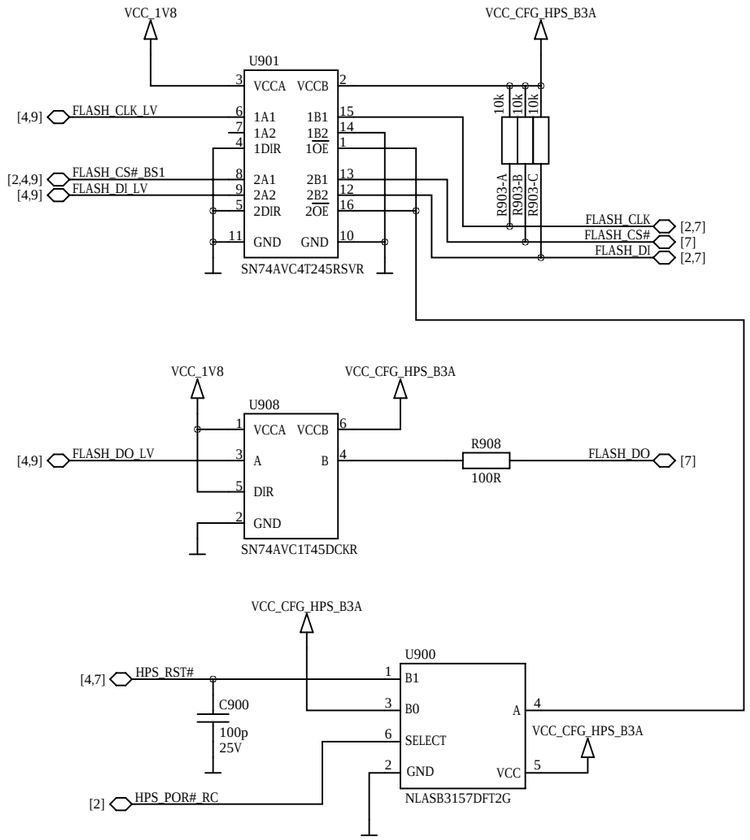

SDIO Clock Multiplexer

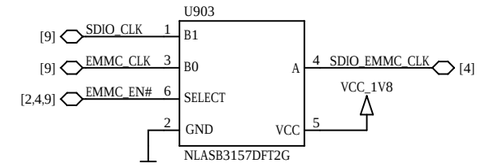

SDIO Level Shifters

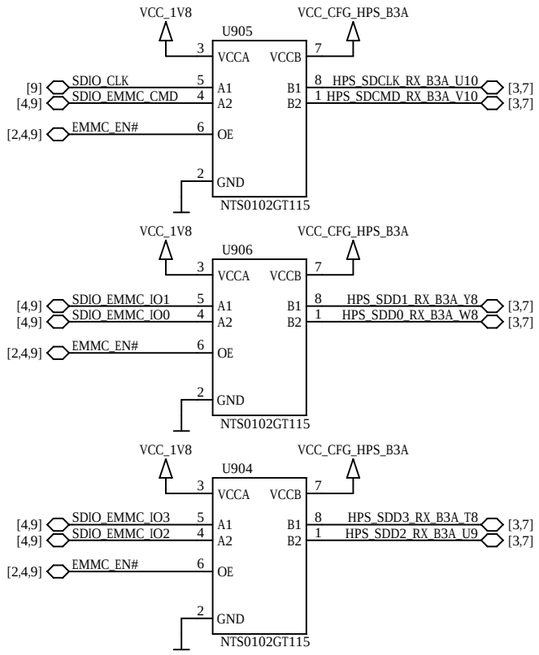

Quad SPI Power

not included in user schematics

This part is intentionally left blank.

eMMC Flash

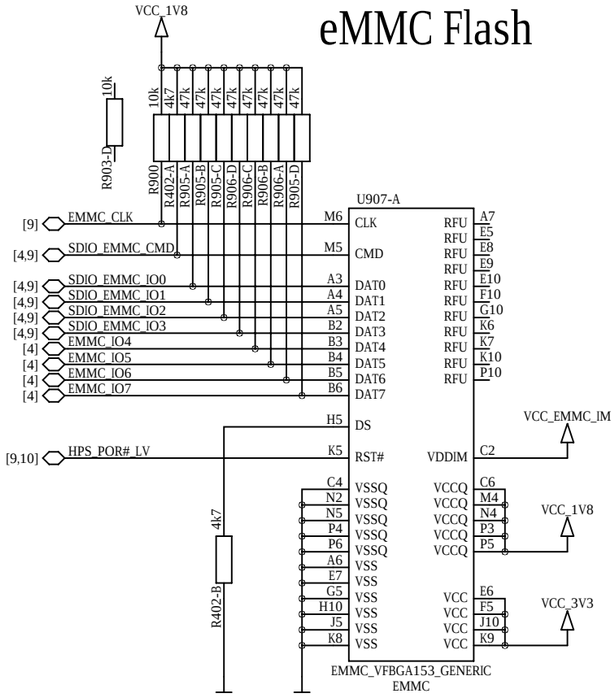

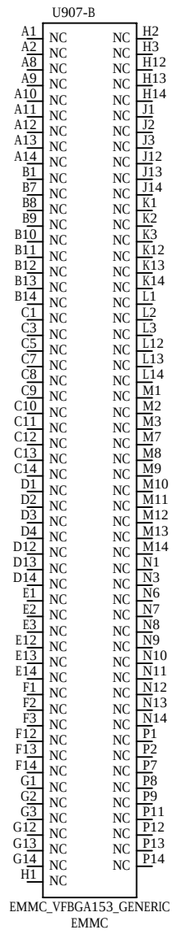

MDIO Level Shifter

Requires VCC_IO_B3B_B4A at 1.65V or higher

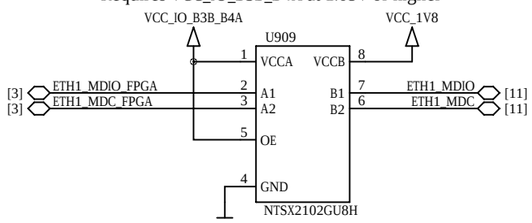

eMMC Power

not included in user schematics

This part is intentionally left blank.

Clock Oscillator

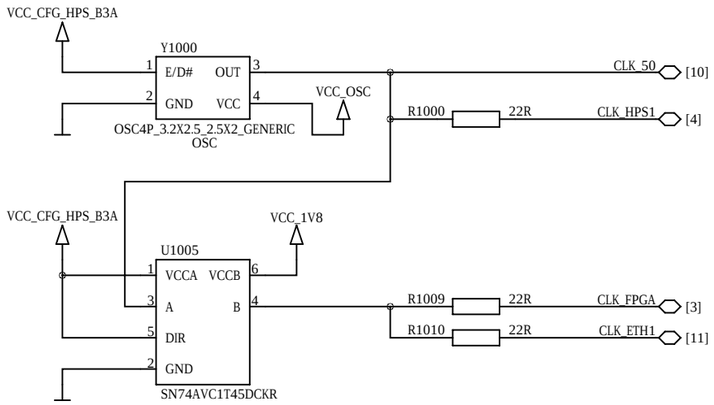

Reset Level Shifter

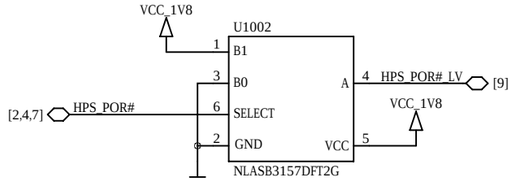

Real-time Clock

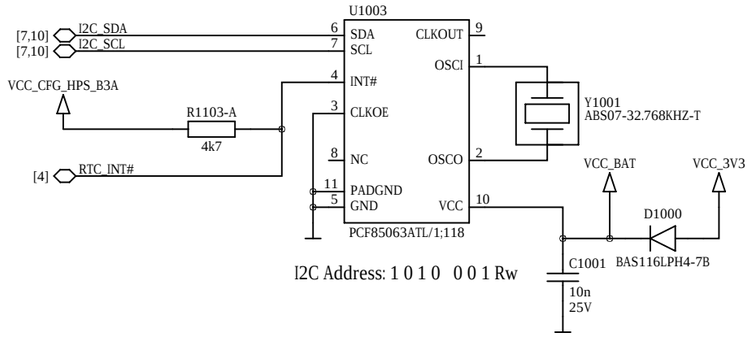

Clock Divider

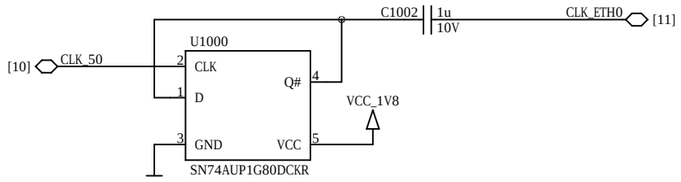

Secure EEPROM

for Enclustra use only

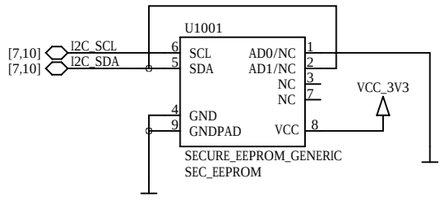

ATSHA204A-MAHDA-T I2C Address: 1 1 0 0 1 0 0 Rw
DS28CN01U-A00+ I2C Address: 1 0 1 1 1 0 0 Rw

I2C Level Shifters

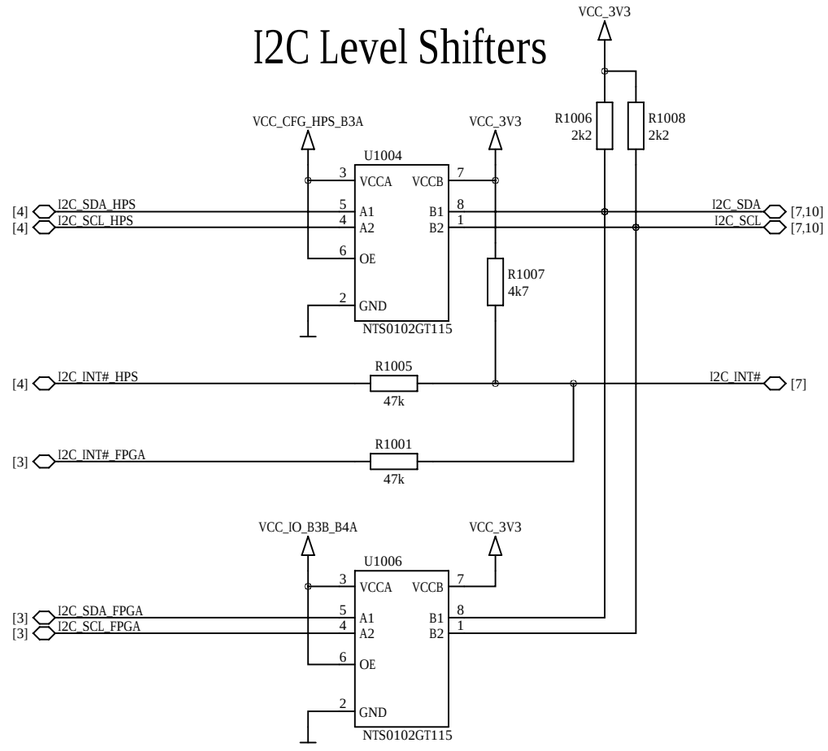

Oscillator Power Filter

not included in user schematics

This part is intentionally left blank.

ENCLUSTRA	Copyright	© 2018 by Enclustra GmbH	Sheet Name	10_CLOCK_RTC_EEPROM	Customer No 0000	Revision R2.1	DNE = do not equip	Confidential
	Company	Enclustra FPGA Solution Center	Project	Mars MA3	Project No 442	Designed MHEI	Date 13 Aug 2018	Sheet/sheets 10 / 16

Gigabit Ethernet PHY

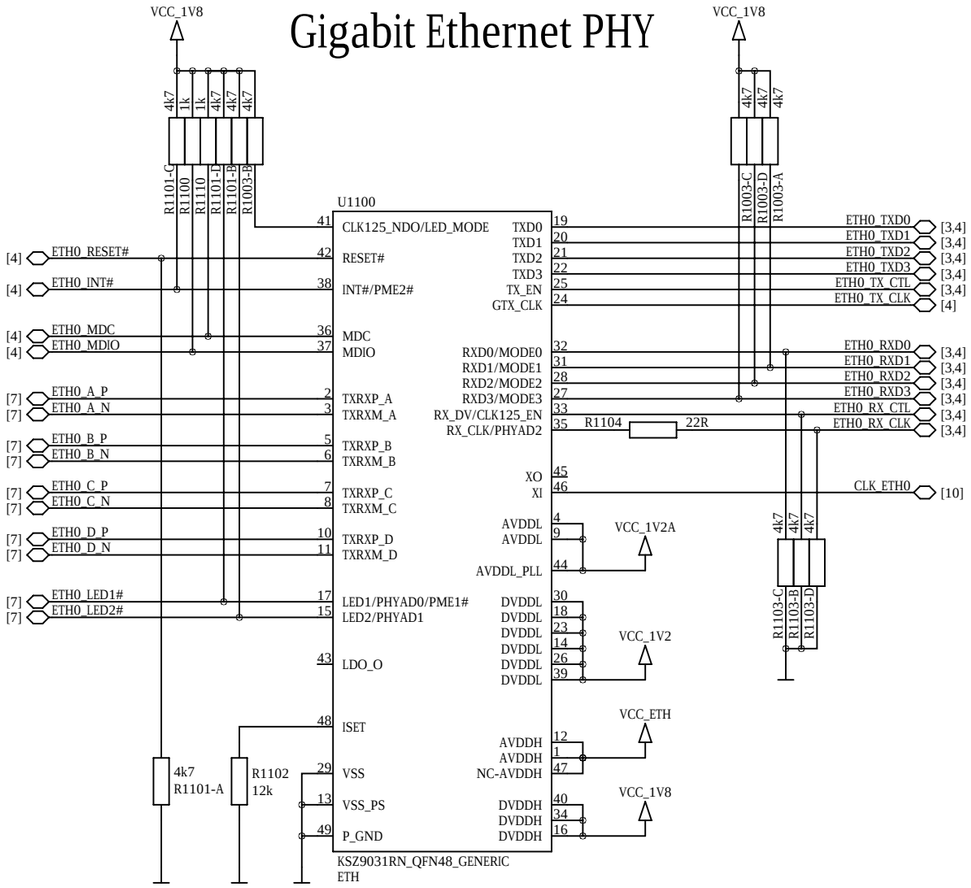

MODE<3:0> = 1110 -> RGMII, all capabilities
LED_Mode Pull up = Single LED
PhyAddress <2:0> = 011 -> 3
LED1 and LED2 are active low

Fast Ethernet PHY

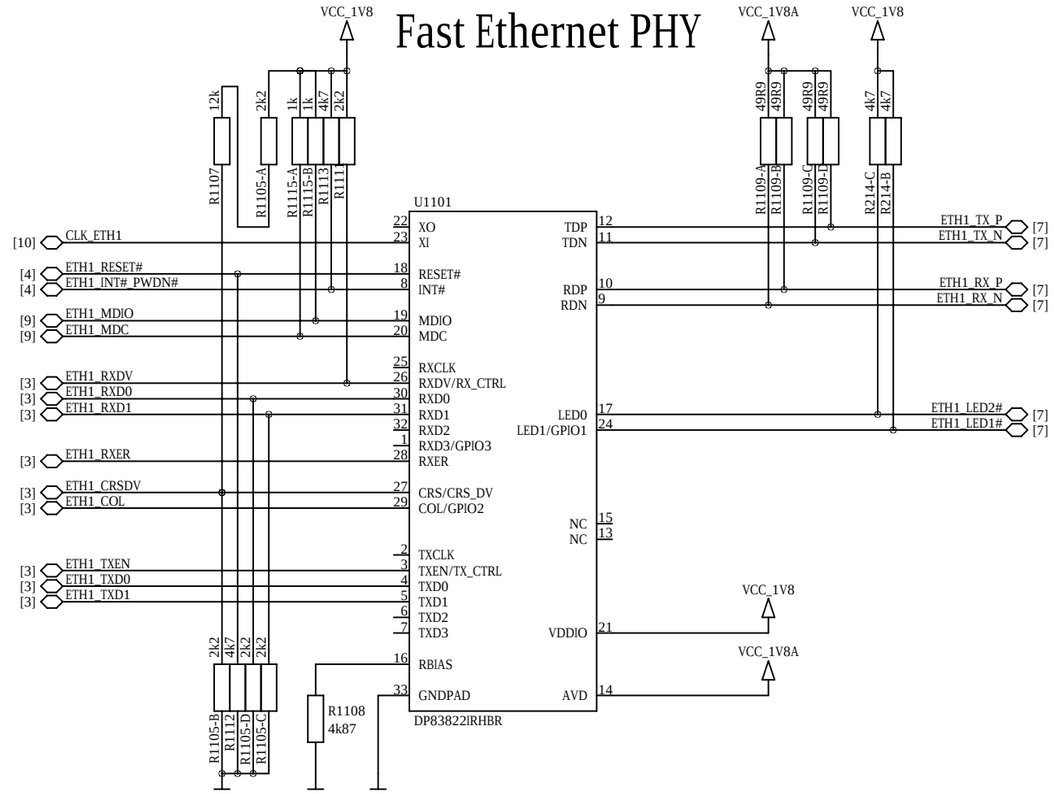

PHYAD<4:0> = 00001 -> 1
LED_CFG = 1 -> LED0 on for good link, blink for RX/TX activity
LED_SPEED = 1 -> LED1 on for 100 Mbps
AMDIX_EN = 1 -> Auto MDI-X enabled
AN_0 = 1 -> auto-negotiation enabled
XI50=1, RMII_EN=1
-> RMII, 50 MHz Ref-Clk

Ethernet Supply Filters

not included in user schematics

This part is intentionally left blank.

Fast Ethernet Decoupling

not included in user schematics

This part is intentionally left blank.

ENCLUSTRA	Copyright	© 2018 by Enclustra GmbH	Sheet Name	11_GIGABIT_FAST_ETHERNET	Customer No	0000	Revision	R2.1	DNE = do not equip	Confidential
	Company	Enclustra FPGA Solution Center	Project	Mars MA3	Project No	442	Designed	MHEI	Date 13 Aug 2018	Sheet/sheets 11 / 16

USB 2.0 PHY

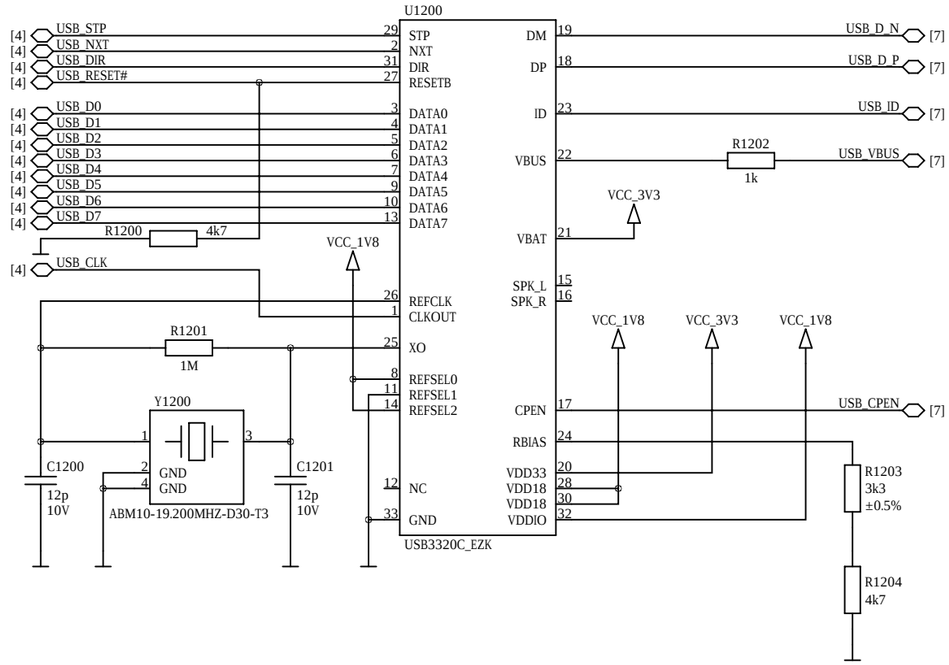

User LEDs

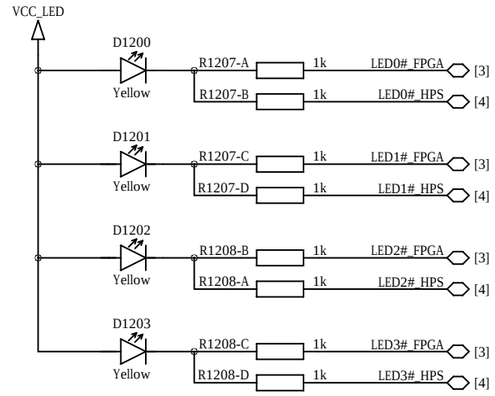

USB Power

not included in user schematics

This part is intentionally left blank.

LED Power

not included in user schematics

This part is intentionally left blank.

Buck Converter 1.1V 3A 3%

not included in user schematics

This part is intentionally left blank.

Supported Voltage Ranges

Power Rail	Direction	Range	Tolerance
VCC_MOD	input	3.3 - 5V	±10%
VCC_3V3	input	3.3V	±5%
VCC_IO_B3B_B4A	input	1.2(*) - 3.3V	±5%
VCC_CFG_HPS_B3A	input	1.8V, 2.5 - 3.3V	±5%
VCC_BAT	input	2.0 - 3.6V	-
VCC_2V5	output	2.5V	±5%
VCC_1V8	output	1.8V	±5%

(*) I2C from FPGA side functional when Bank 3B/4A at 1.8V or higher.

(*) Fast ETH MDIO available when Bank 3B/4A at 1.8V or higher.

Input Power Filter

not included in user schematics

This part is intentionally left blank.

Dual Buck Converters

channel 1: 1.2V 1A 5%
channel 2: 1.8V 1.5A 3%
not included in user schematics

This part is intentionally left blank.

Dual Buck Converters

channel 1: 1.35V 1A 5%
channel 2: 2.5V 1.5A 3%
not included in user schematics

This part is intentionally left blank.

Pre-Driver Voltage Generation

not included in user schematics

This part is intentionally left blank.

Reference Voltage Generation

not included in user schematics

This part is intentionally left blank.

Module Mounting Holes M3

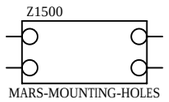

Fiducials

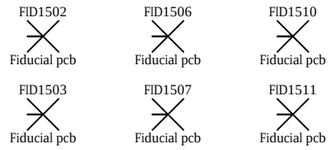

Panel Fiducials

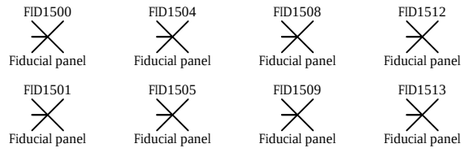

FPGA Heat Sink

optional

Super-Grip

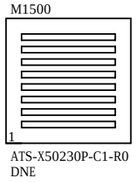

PCB / Logo / Pin-1 Marking / Text

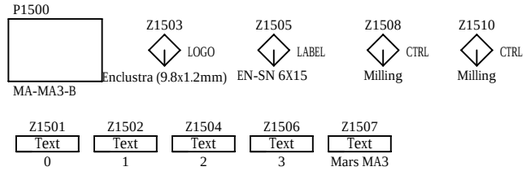

ENCLUSTRA	Copyright	© 2018 by Enclustra GmbH	Sheet Name	15_MECHANICS	Customer No	0000	Revision	R2.1	DNE = do not equip	Confidential
	Company	Enclustra FPGA Solution Center	Project	Mars MA3	Project No	442	Designed	MHEI	Date 13 Aug 2018	Sheet/sheets 15 / 16

Component Variants

FPGA	DDR3L	eMMC	Ethernet PHY	OSC	SEC_EEPROM	L1U5	L2U2	5CSX
Part U200A 5CSEBA4U23C8N EN101855	Part U800A:1 H5TC4G63CFR-RDI EN101580	Part U907A H26M52208FPRI EN101865	Part U1100A KSZ9031RNXIA EN101934	Part Y1000A ASEMB_50.000MHZ-LC-T EN100288	Part U1001A ATSHA204A-MAHDA-T EN100827	Part L1301A:1 1u5 EN101859	Part L1300A:1 2u2 EN101850	
Part U200B 5CSEBA5U23I7N EN101857	Part U800A:2 K4B4G1646D-BMMA EN101579	Part U907B EMMC16G-W525-X01U EN101932	Part U1100B KSZ9031RNXCA EN100202	Part Y1000B ASDMB-50.000MHZ-LC-T EN100918	Part U1001B DS28CN01U-A00+ EN100280	Part L1301A:2 1u5 EN101860	Part L1300A:2 2u2 EN101849	
Part U200C 5CSXFC5C6U23C8N EN102048	Part U800A:3 K4B4G1646D-BMK0 EN101528						Part L1302A:1 2u2 EN101850	
Part U200D 5CSXFC6C6U23I7N EN100806	Part U800B NT5CC256M16CP-DI EN101027						Part L1302A:2 2u2 EN101849	
Part U200E 5CSEBA5U23C8N EN101856	Part U801A:1 H5TC4G63CFR-RDI EN101580						Part L1400A:1 2u2 EN101850	
	Part U801A:2 K4B4G1646D-BMMA EN101579						Part L1400A:2 2u2 EN101849	
	Part U801A:3 K4B4G1646D-BMK0 EN101528						Part L1401A:1 2u2 EN101850	
	Part U801B NT5CC256M16CP-DI EN101027						Part L1401A:2 2u2 EN101849	

Assembly Variants

Assembly Variant	FPGA	DDR3L	eMMC	Ethernet PHY	OSC	SEC_EEPROM	L1U5	L2U2	5CSX
Variant EN102043:0 MA-MA3-A4-8C-D10-R2	Option EN102043:1 FPGA EN101855	Option EN102043:2 DDR3L EN101528	Option EN102043:3 EMMC EN101932	Option EN102043:4 ETH EN101934	Option EN102043:5 OSC EN100288	Option EN102043:6 SEC_EEPROM EN100827	Option EN102043:7 L1U5 EN101859	Option EN102043:8 L2U2 EN101850	Option EN102043:9 5CSX DNE
Variant EN102044:0 MA-MA3-A5-7I-D10-R2	Option EN102044:1 FPGA EN101857	Option EN102044:2 DDR3L EN101528	Option EN102044:3 EMMC EN101932	Option EN102044:4 ETH EN101934	Option EN102044:5 OSC EN100288	Option EN102044:6 SEC_EEPROM EN100827	Option EN102044:7 L1U5 EN101859	Option EN102044:8 L2U2 EN101850	Option EN102044:9 5CSX DNE
Variant EN102045:0 MA-MA3-C5-8C-D10-R2	Option EN102045:1 FPGA EN102048	Option EN102045:2 DDR3L EN101528	Option EN102045:3 EMMC EN101932	Option EN102045:4 ETH EN101934	Option EN102045:5 OSC EN100288	Option EN102045:6 SEC_EEPROM EN100827	Option EN102045:7 L1U5 EN101859	Option EN102045:8 L2U2 EN101850	Option EN102045:9 5CSX
Variant EN102046:0 MA-MA3-C6-7I-D10-R2	Option EN102046:1 FPGA EN100806	Option EN102046:2 DDR3L EN101528	Option EN102046:3 EMMC EN101932	Option EN102046:4 ETH EN101934	Option EN102046:5 OSC EN100288	Option EN102046:6 SEC_EEPROM EN100827	Option EN102046:7 L1U5 EN101859	Option EN102046:8 L2U2 EN101850	Option EN102046:9 5CSX
Variant EN102047:0 MA-MA3-A5-8C-D10-R2	Option EN102047:1 FPGA EN101856	Option EN102047:2 DDR3L EN101528	Option EN102047:3 EMMC EN101932	Option EN102047:4 ETH EN101934	Option EN102047:5 OSC EN100288	Option EN102047:6 SEC_EEPROM EN100827	Option EN102047:7 L1U5 EN101859	Option EN102047:8 L2U2 EN101850	Option EN102047:9 5CSX DNE