Enclustra User Schematics

# Mars XU3 Revision 2.0

## Disclaimer

User schematics do not include proprietary Enclustra design elements, such as power supply circuits.
These circuits use optimized designs which are extremely compact and remain proprietary to Enclustra.
The user manual provides all necessary information to use the module and its interfaces.

User schematics are provided after purchase of Enclustra hardware, and may also be provided in certain cases before purchase, to assist in product evaluation.
No part of the schematics may be copied or modified without written permission from Enclustra.

Full schematics, including a full bill-of-materials, may be available through the purchase of a hardware licence for the product in question.
Please contact Enclustra Sales for more information.

Note: DNE = Do Not Equip (parts not equipped by default)

© Enclustra GmbH

# Mars XU3 SoC Module

## Revision 2.0


Sheet 1: Cover
Sheet 2: SoC FPGA Configuration
Sheet 3: SoC FPGA IO Banks | LEDs
Sheet 4: SoC FPGA PS Banks
Sheet 5: SoC FPGA Power
Sheet 6: Power Decoupling
Sheet 7: SO-DIMM Module Connector
Sheet 8: DDR4 SDRAM
Sheet 9: Oscillators
Sheet 10: Gigabit Ethernet PHY
Sheet 11: USB 2.0 PHY
Sheet 12: eMMC Flash | QSPI Flash
Sheet 13: Power INT | PSINT | 2.5V
Sheet 14: Power 1.2V | 1.8V
Sheet 15: Mechanics
Sheet 16: Assembly Variants
Sheet 17: Assembly Variants (continued)

## Boot Mode Selection

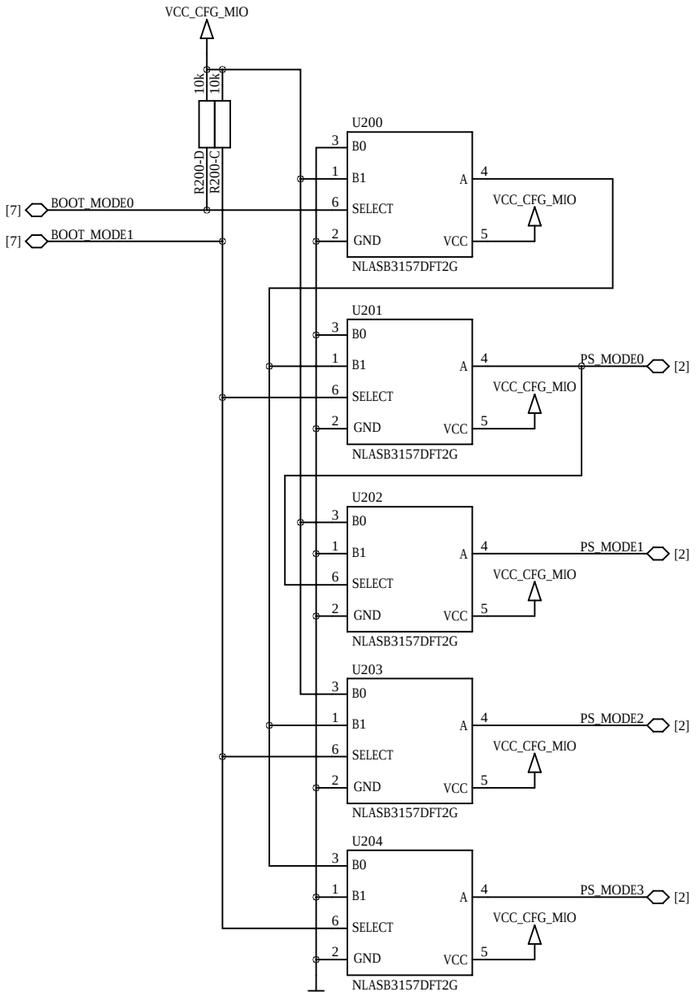


## Reset Circuit

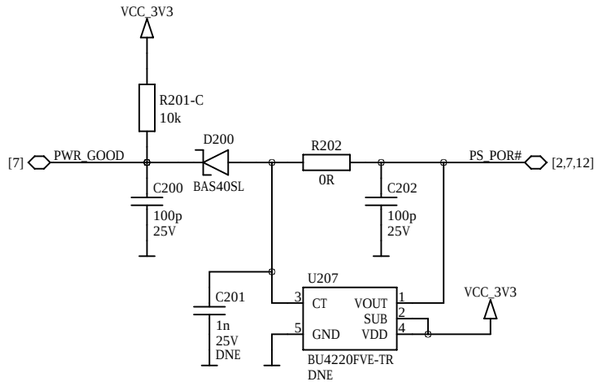


## Reset Level Shifter

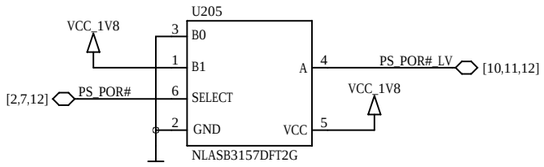


## Miscellaneous

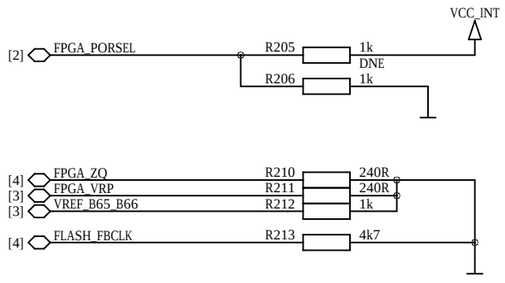


## Boot Modes

| | Boot Mode | | Mode Straps | Configuration | |
|---|---|---|---|---|---|
| | 1 | 0 | PS_MODE | PL Boot | PS Boot |
| eMMC Mode | 0 | 0 | 0110 | PS | eMMC |
| SD Mode LS not supported | 0 | 1 | 1110 | PS | SDIO with level shifter |
| QSPI Mode | 1 | 0 | 0010 | PS | QSPI |
| SD Mode default | 1 | 1 | 0101 | PS | SDIO |

SD Mode LS mode may be supported in the future and requires VCC_CFG_MIO of 1.8V.

## FPGA Configuration

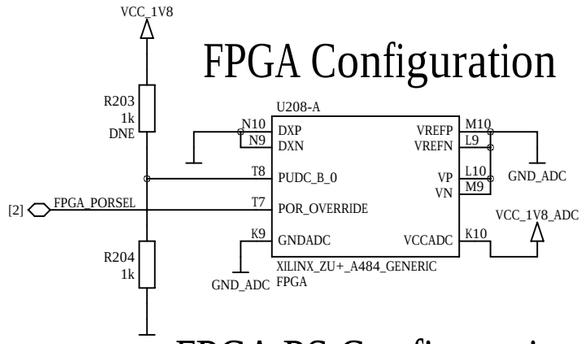


## FPGA PS Configuration

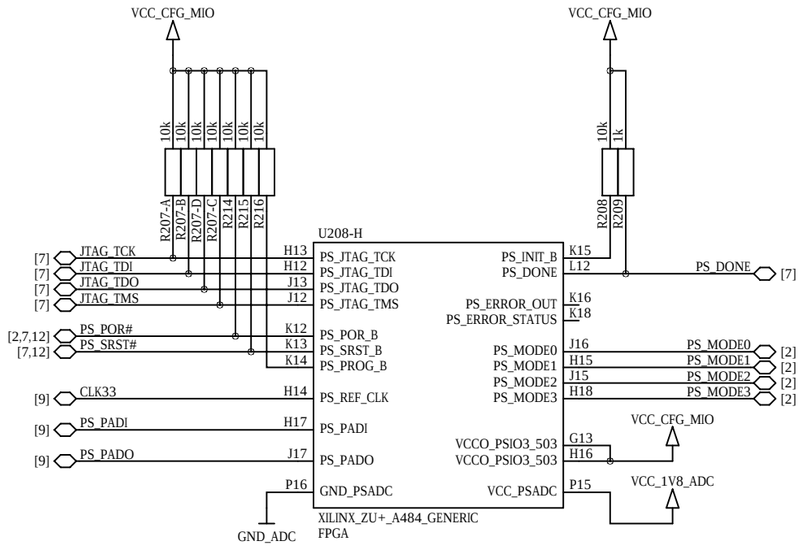

# FPGA HP Bank 65

VCCO = VCC_IO_B65 (max 1.8V)

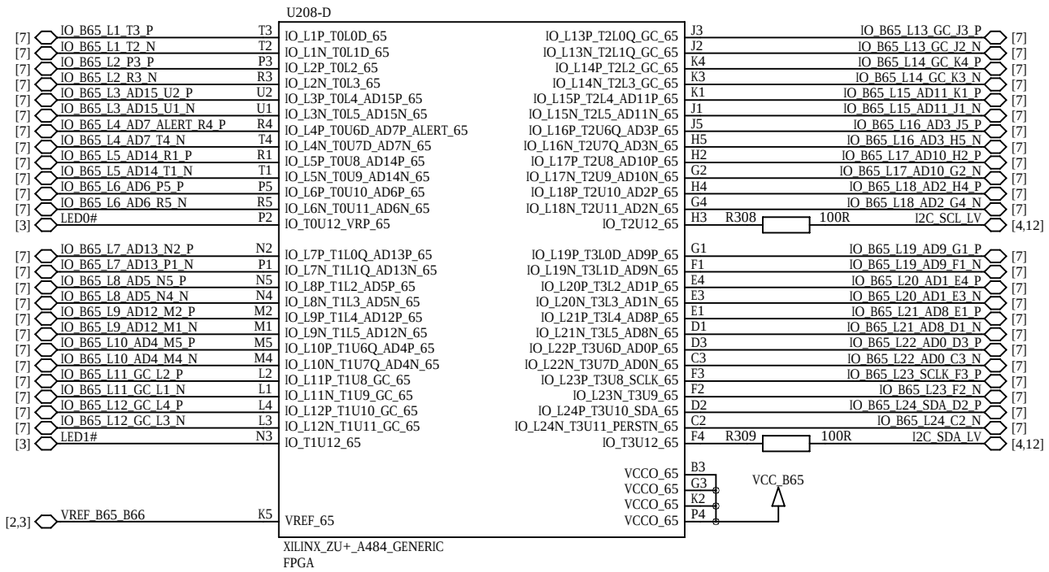


# FPGA HP Bank 66

VCCO = VCC_IO_B65 (max 1.8V)

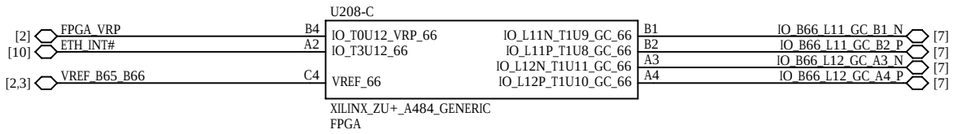


# FPGA HD Bank 26

VCCO = VCC_IO_B26

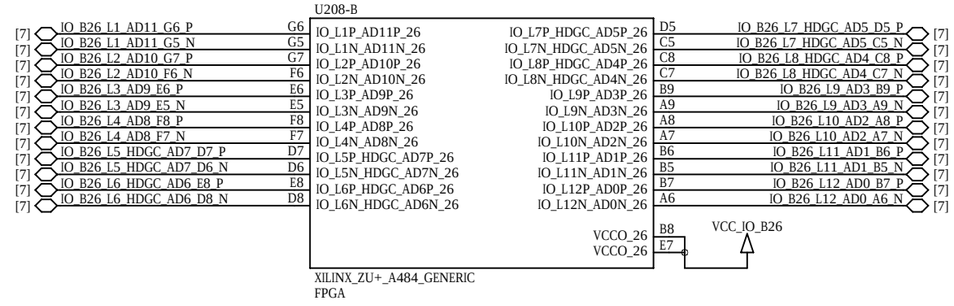


# User LEDs

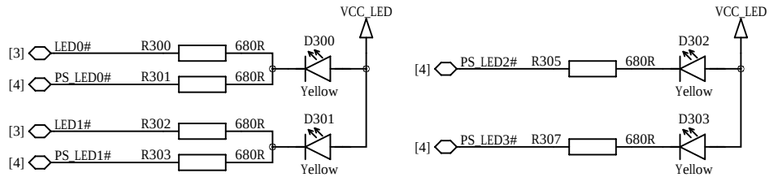


# LED Power

not included in user schematics

This part is intentionally left blank.

| | | | | | | | | | |
|---|---|---|---|---|---|---|---|---|---|
| ENCLUSTRA | Copyright | © 2021 by Enclustra GmbH | Sheet Name | 03_FPGA_IO_BANKS_LEDS | Customer No | 0000 | Revision | R2.0 | DNE = do not equip | Confidential |
| | Company | Enclustra FPGA Solution Center | Project | Mars XU3 | Project No | 432 | Designed | MHEI | Date 13 Apr 2021 | Sheet/sheets 3 / 17 |

# FPGA PS DDR Bank 504

VCCO = VCC_1V2

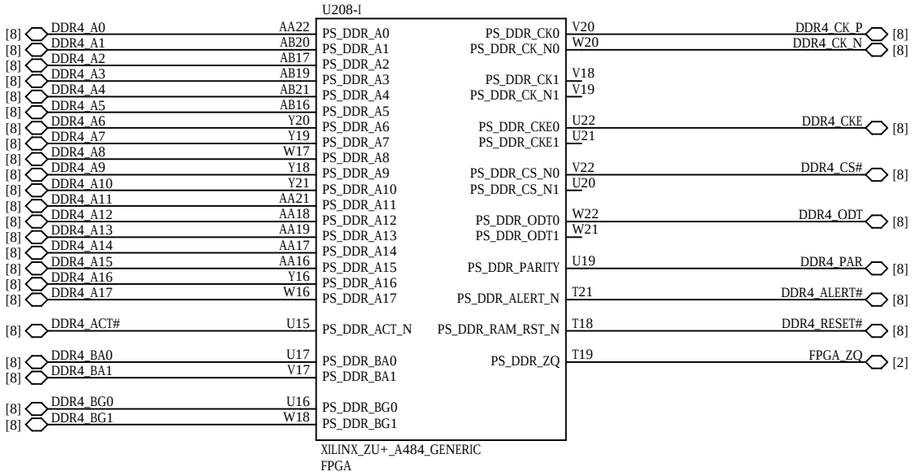


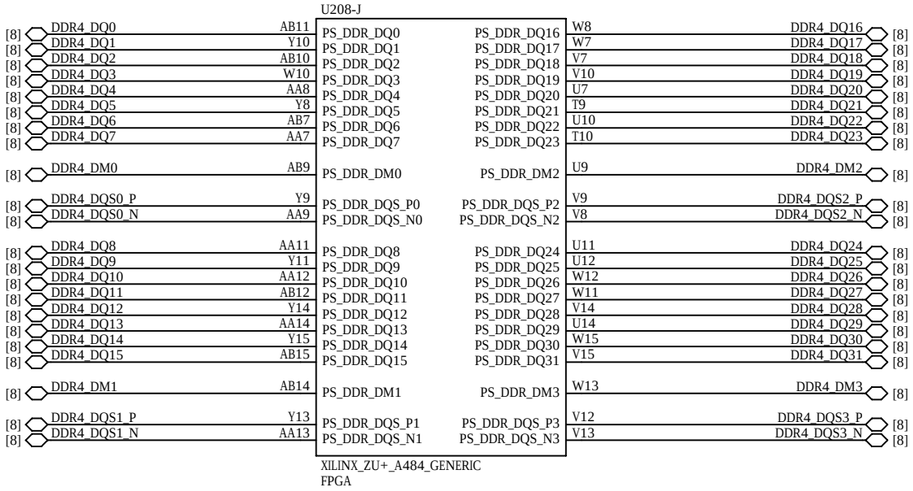


# FPGA PS GTR Bank 505

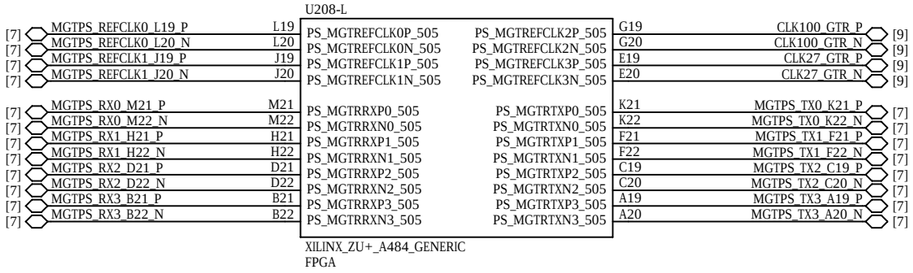


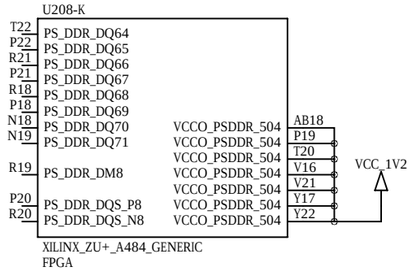


# FPGA PS Bank 500

VCCO = VCC_1V8

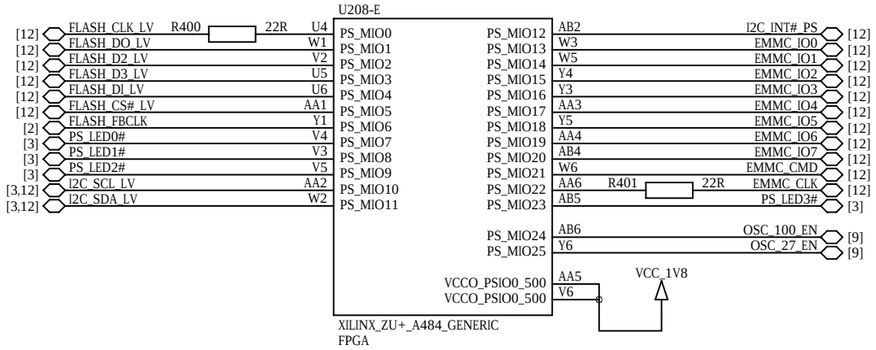


# FPGA PS Bank 501

VCCO = VCC_CFG_MIO

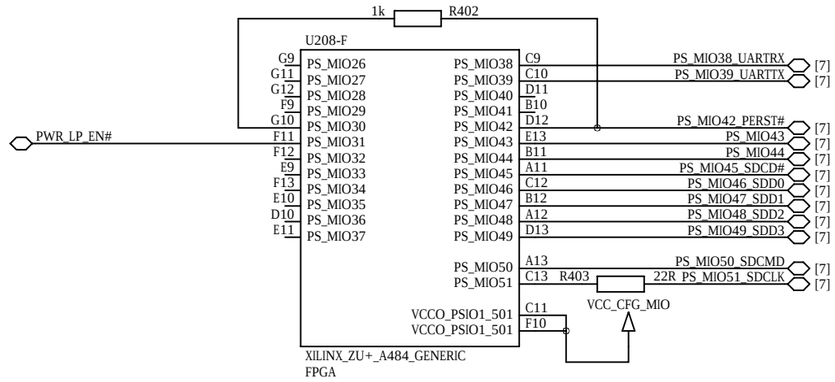


# FPGA PS Bank 502

VCCO = VCC_1V8

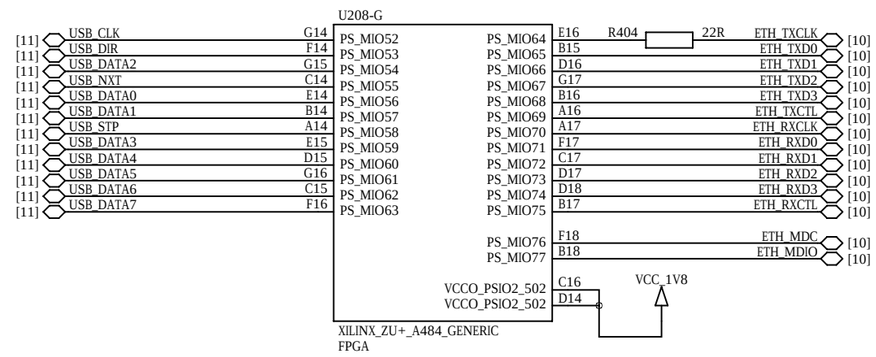

# FPGA Ground

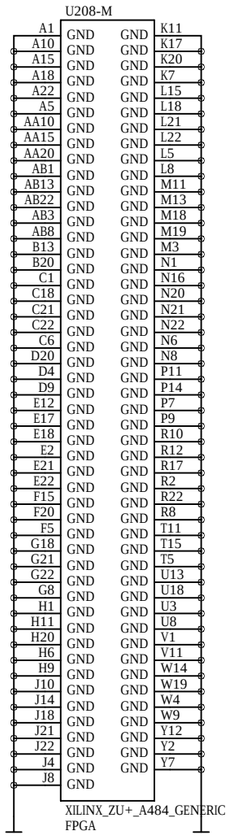


# FPGA Power

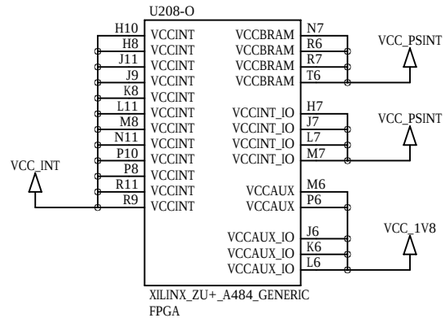


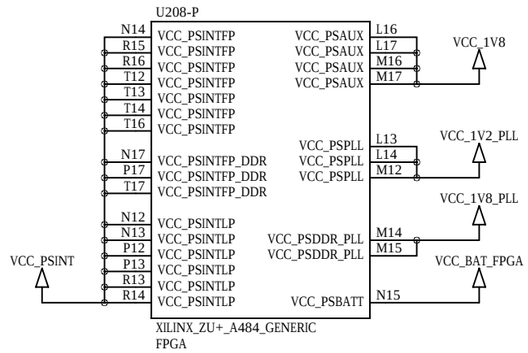


# FPGA MGT Power

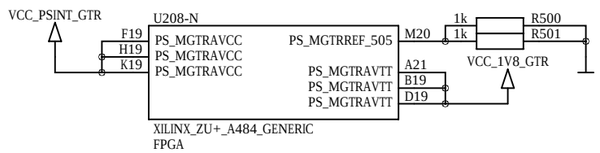


# ADC Power

not included in user schematics

This part is intentionally left blank.

# FPGA Battery Voltage

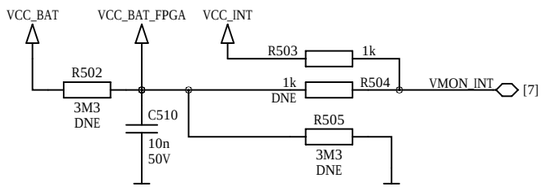


# PLL and GTR Power Filters

not included in user schematics

This part is intentionally left blank.

# FPGA I/O Over-Voltage Protection

not included in user schematics

This part is intentionally left blank.

# Voltage Reference

not included in user schematics

This part is intentionally left blank.

| | | | | | | | |
|---|---|---|---|---|---|---|---|
| ENCLUSTRA | Copyright © 2021 by Enclustra GmbH | Sheet Name 05_FPGA_POWER | Customer No 0000 | Revision R2.0 | DNE = do not equip | Confidential | |
| | Company Enclustra FPGA Solution Center | Project Mars XU3 | Project No 432 | Designed MHEI | Date 13 Apr 2021 | Sheet/sheets 5 / 17 | |

# FPGA Decoupling

not included in user schematics

This part is intentionally left blank.

# Power Decoupling

not included in user schematics

This part is intentionally left blank.

# SO-DIMM Connector

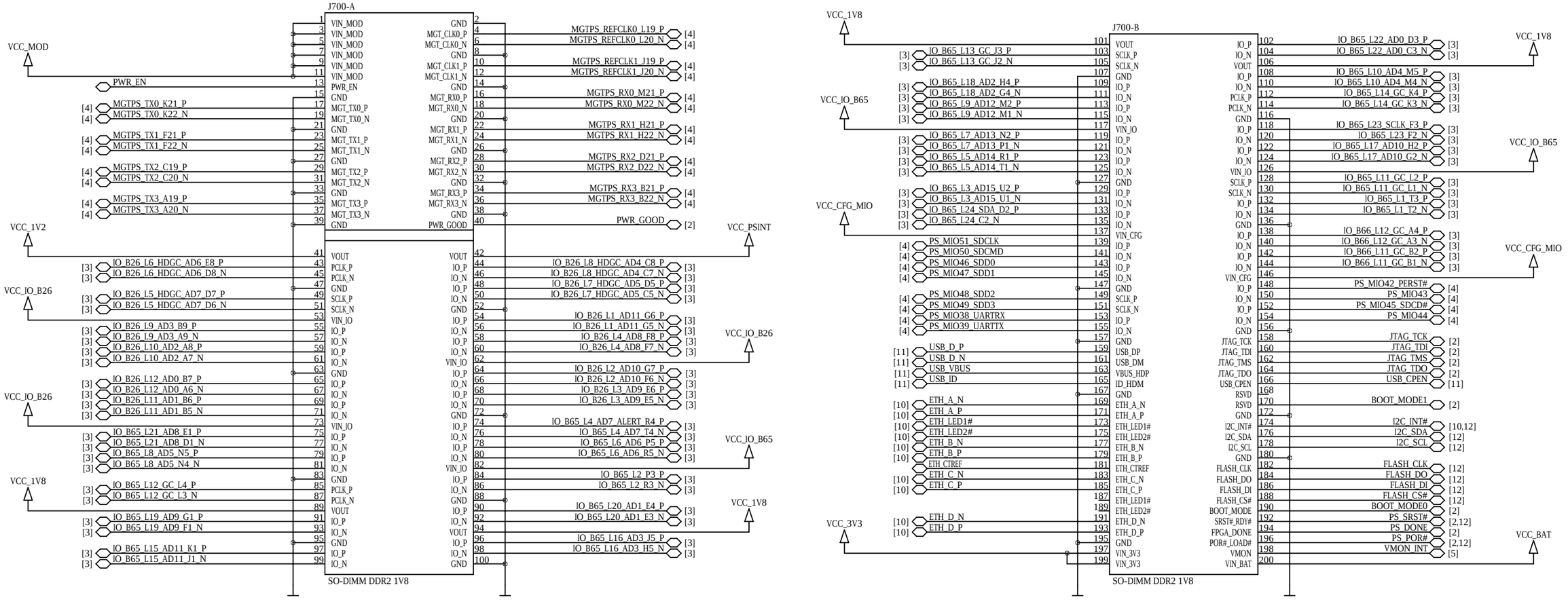


| | | | | | | | |
|---|---|---|---|---|---|---|---|
| ENCLUSTRA | Copyright © 2021 by Enclustra GmbH | Sheet Name 07_SO-DIMM_MODULE_CONNECTOR | Customer No 0000 | Revision R2.0 | DNE = do not equip | Confidential |
| | Company Enclustra FPGA Solution Center | Project Mars XU3 | Project No 432 | Designed MHEI | Date 13 Apr 2021 | Sheet/sheets 7 / 17 |

# DDR4 SDRAM Bytes 0-1

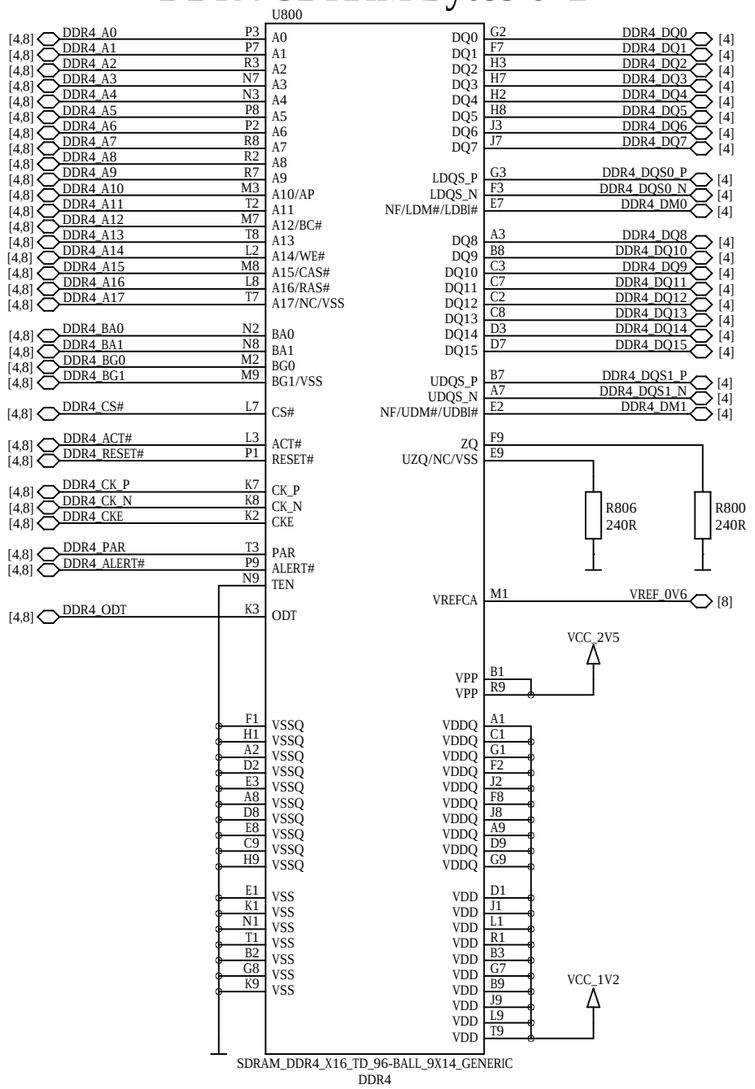


# DDR4 SDRAM Bytes 2-3

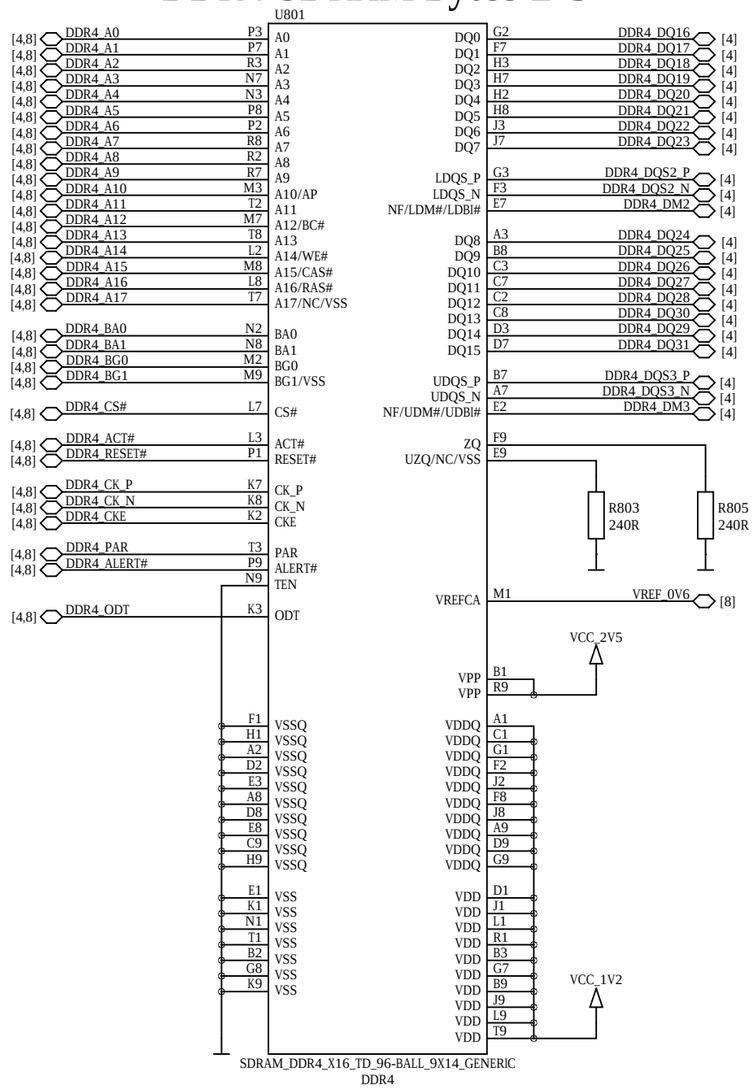


# DDR4 Decoupling

not included in user schematics

This part is intentionally left blank.

# DDR4 Miscellaneous

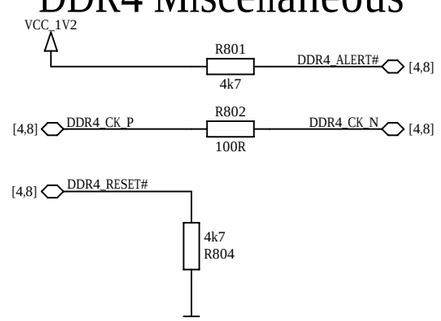


| | | | | | | | | | |
|---|---|---|---|---|---|---|---|---|---|
| ENCLUSTRA | Copyright | © 2021 by Enclustra GmbH | Sheet Name | 08_DDR4_SDRAM | Customer No | 0000 | Revision | R2.0 | DNE = do not equip | Confidential |
| | Company | Enclustra FPGA Solution Center | Project | Mars XU3 | Project No | 432 | Designed | MHEI | Date 13 Apr 2021 | Sheet/sheets 8 / 17 |

# GTR 100 MHz Oscillator

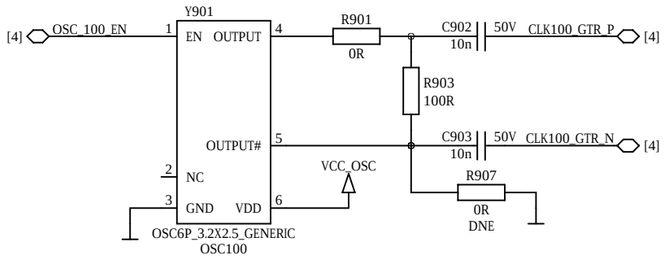


# GTR 27 MHz Oscillator

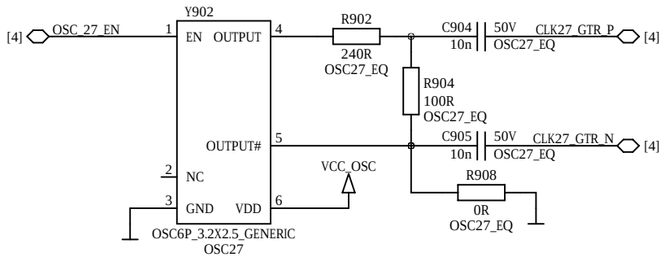


# PS 33.3 MHz Oscillator

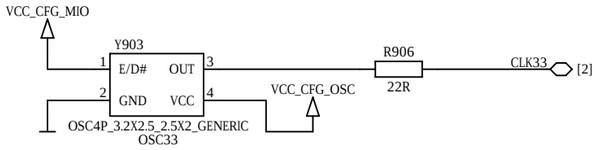


# USB 24 MHz Oscillator

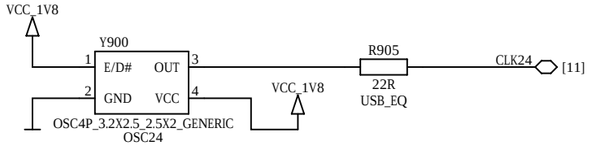


# RTC Crystal

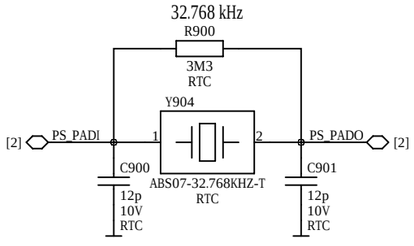


This part is intentionally left blank.

# Oscillator Power Filters

not included in user schematics

This part is intentionally left blank.

| | | | | | | | | | |
|---|---|---|---|---|---|---|---|---|---|
| ENCLUSTRA | Copyright | © 2021 by Enclustra GmbH | Sheet Name | 09_OSCILLATORS | Customer No | 0000 | Revision | R2.0 | DNE = do not equip | Confidential |
| | Company | Enclustra FPGA Solution Center | Project | Mars XU3 | Project No | 432 | Designed | MHEI | Date 13 Apr 2021 | Sheet/sheets 9 / 17 |

# Gigabit Ethernet PHY

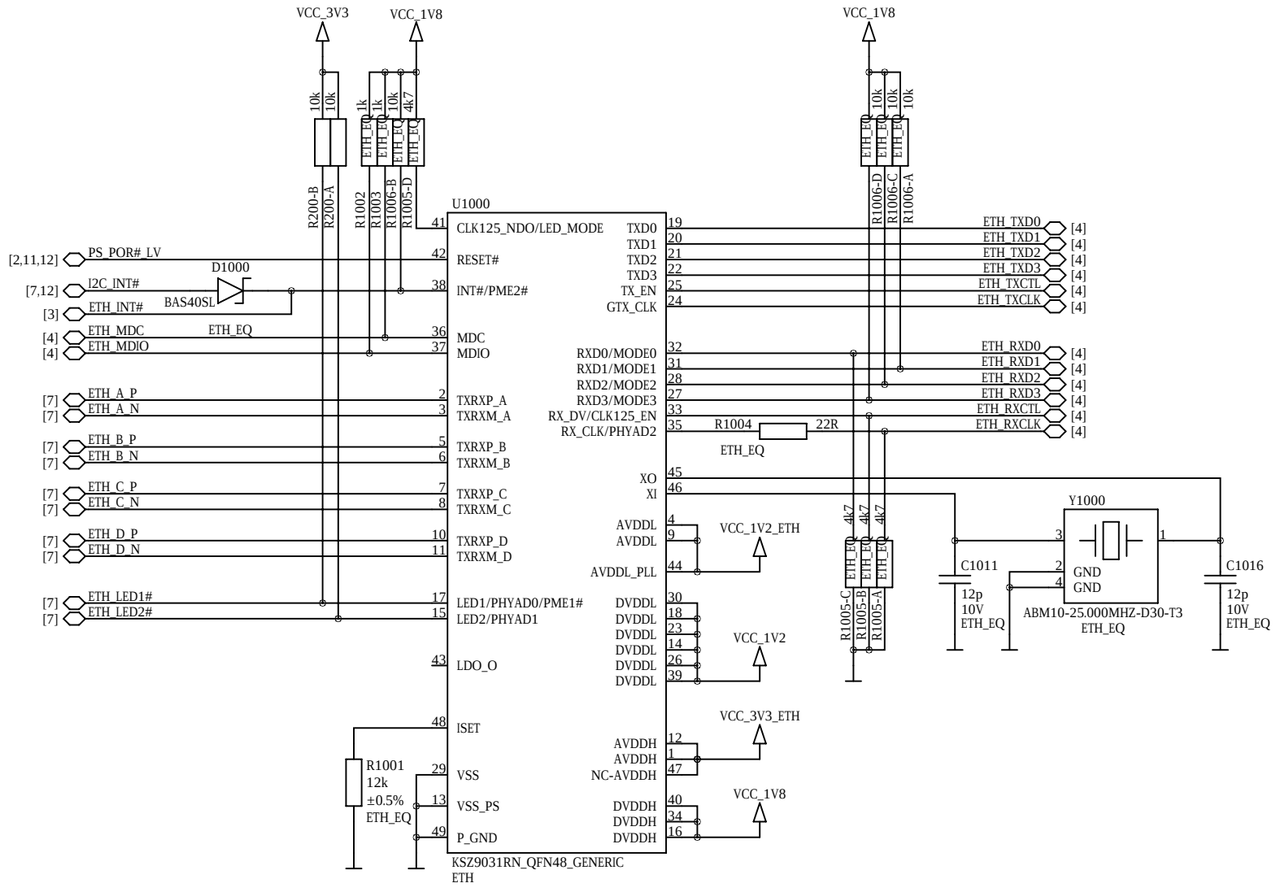


MODE<3:0> = 1110 -> RGMII, all capabilities
LED_Mode Pull up = Single LED
PhyAddress <2:0> = 011 -> 3
LED1 and LED2 are active low

# Ethernet Power Filters

not included in user schematics

This part is intentionally left blank.

| | | | | | | | |
|---|---|---|---|---|---|---|---|
| ENCLUSTRA | Copyright © 2021 by Enclustra GmbH | Sheet Name 10_GIGABIT_ETHERNET_PHY | Customer No 0000 | Revision R2.0 | DNE = do not equip | Confidential | |
| | Company Enclustra FPGA Solution Center | Project Mars XU3 | Project No 432 | Designed MHEI | Date 13 Apr 2021 | Sheet/sheets 10 / 17 | |

# USB 2.0/3.0 OTG PHY

A-Device ID=GND, B-Device ID=Float, Not Used ID=VDD33

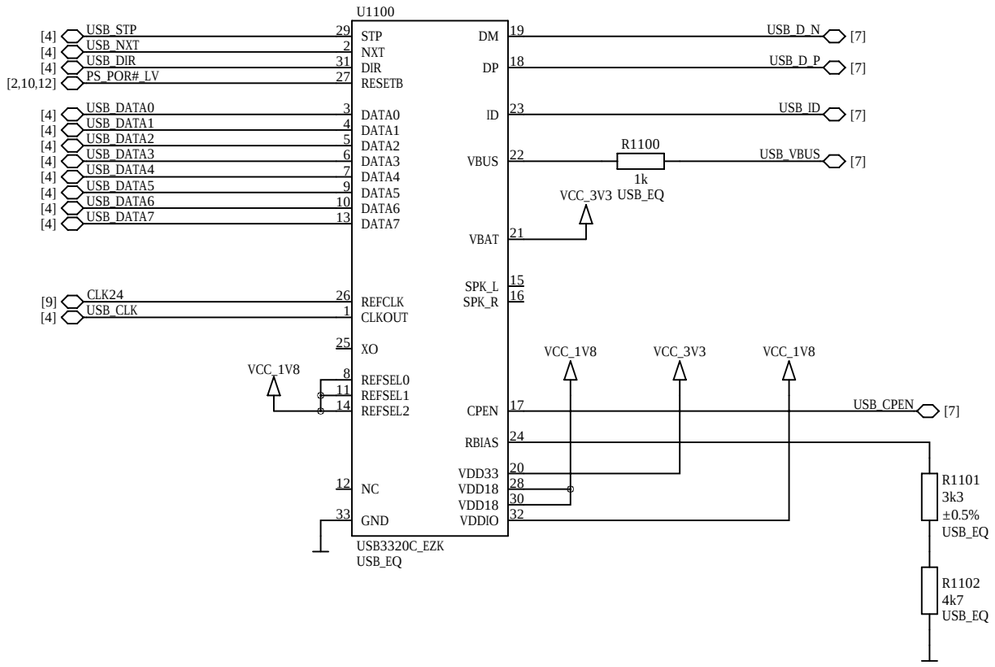


# USB 2.0 Power Decoupling

not included in user schematics

This part is intentionally left blank.

# Flash Level Shifter

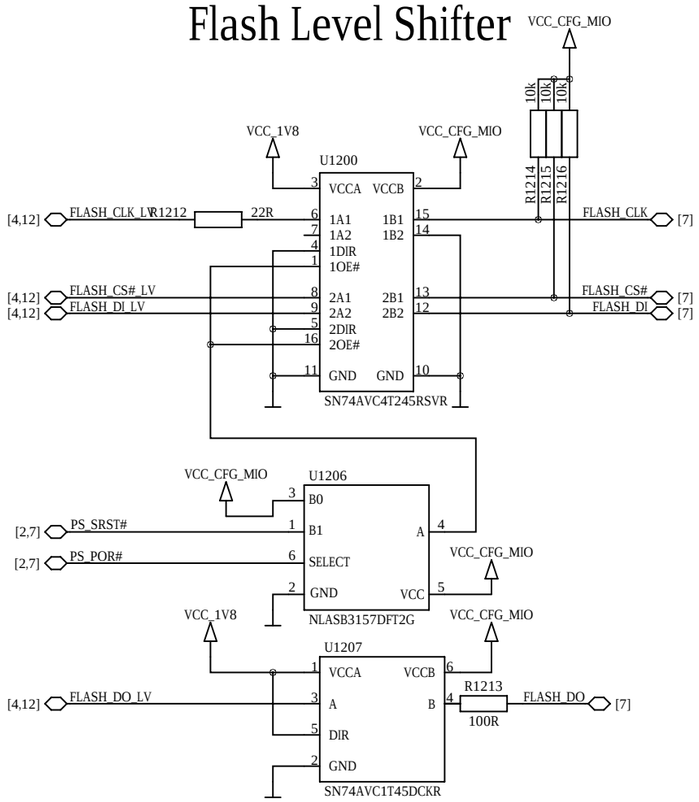


# Quad SPI Flash

pin compatible with Micron N25Q512A11G1240F

Micron requires VCC_FLASH = 1.8V

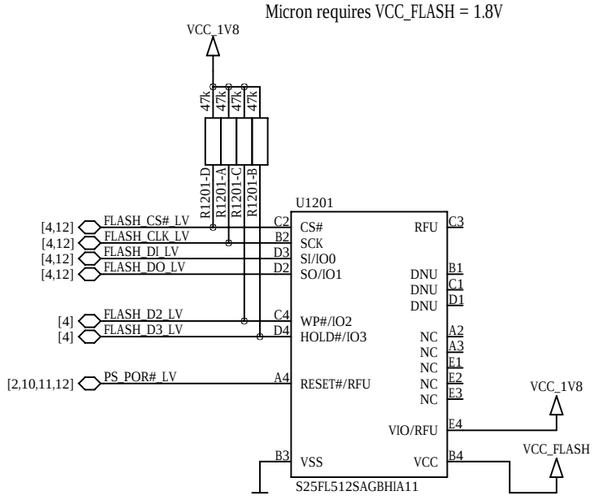


# I2C Level Shifter

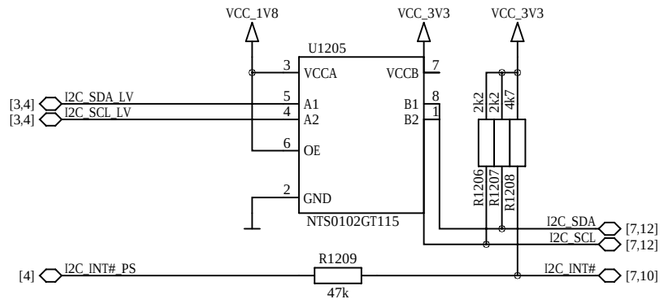


# eMMC Flash

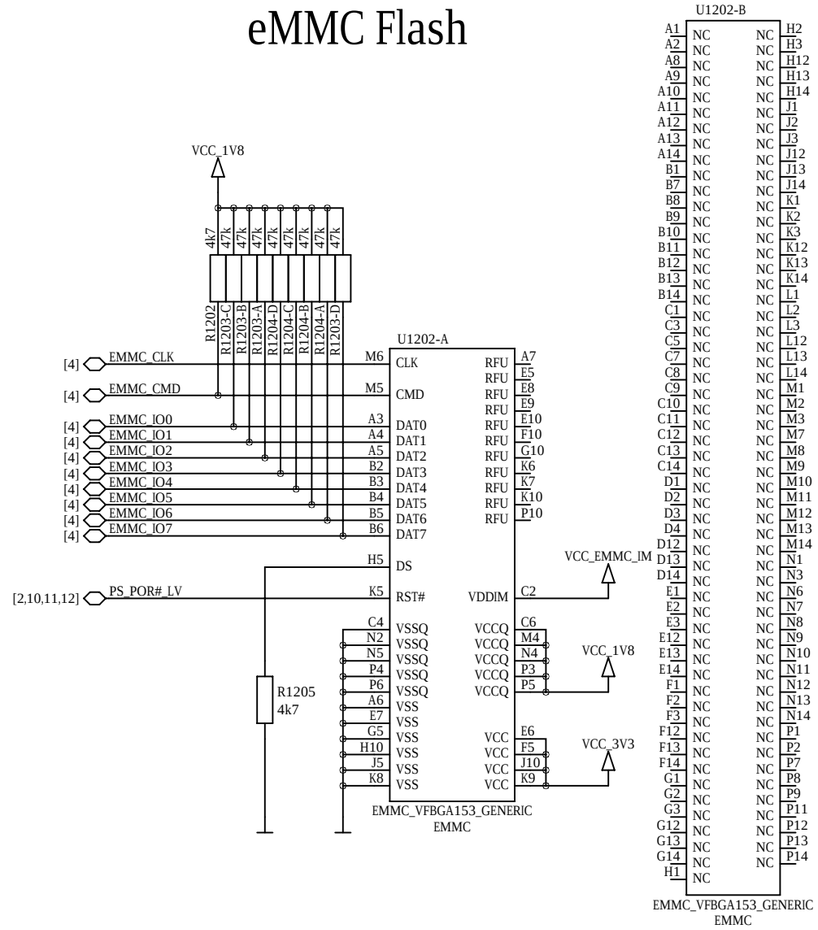


# Secure EEPROM

for Enclustra use only

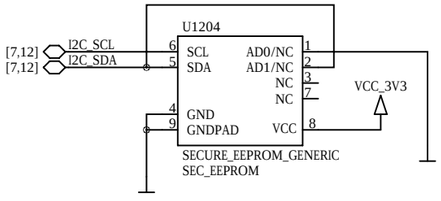


ATSHA204A-MAHDA-T I2C Address: 1 1 0 0  1 0 0 Rw

DS28CN01U-A00+ I2C Address: 1 0 1 1  1 0 0 Rw

# Quad SPI Power

not included in user schematics

This part is intentionally left blank.

# eMMC Power

not included in user schematics

This part is intentionally left blank.

| | | | | | | | |
|---|---|---|---|---|---|---|---|
| ENCLUSTRA | Copyright © 2021 by Enclustra GmbH | Sheet Name 12_EMMC_QSPI_FLASH_SHIFTER | Customer No 0000 | Revision R2.0 | DNE = do not equip | Confidential | |
| | Company Enclustra FPGA Solution Center | Project Mars XU3 | Project No 432 | Designed MHEI | Date 13 Apr 2021 | Sheet/sheets 12 / 17 | |

# DC / DC Converter 0.72/0.85/0.9V 3A 3%

Default: 0.72V or 0.85V

For 0.72V pull PWR_LP_EN# low

not included in user schematics

This part is intentionally left blank.

# Supported Voltage Ranges

| Power Rail | Direction | Range | Tolerance |
|---|---|---|---|
| VCC_MOD | input | 3.3 - 5V | ±10% |
| VCC_3V3 | input | 3.3V | ±5% |
| VCC_CFG_MIO | input | 1.8 - 3.3V | ±5% |
| VCC_IO_B26 | input | 1.2 - 3.3V | ±5% |
| VCC_IO_B65 | input | 1.0 - 1.8V | ±5% |
| VCC_BAT | input | 2.7 - 3.6V * | - |
| VCC_1V8 | output | 1.8V | ±5% |
| VCC_2V5 | output | 2.5V | ±5% |

When using VCC_IO_B26 at 3.3V, the tolerance is -5% +3%.

When using VCC_IO_B65 below 1.8V, the I2C bus on bank 65 is not operational

* Voltage range valid for LDO assembly option for VCC_BAT_FPGA (default assembly variant).

# Input Power Filter

not included in user schematics

This part is intentionally left blank.

# DC / DC Converter 0.85/0.9V 3A 3%

Default: 0.85V

not included in user schematics

This part is intentionally left blank.

# LDO 2.5V 0.2A

not included in user schematics

This part is intentionally left blank.

# Dual DC/DC Converter

channel 1: 1.2V 2A 3%

channel 2: 1.8V 2A 3%

not included in user schematics

This part is intentionally left blank.

## DDR4 VREF Generation

not included in user schematics

This part is intentionally left blank.

## LDO 1.2V 10 mA

not included in user schematics

This part is intentionally left blank.

## Module Mounting Holes M3

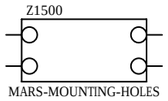


## PCB Fiducials

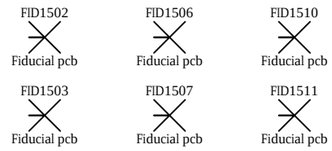


## Panel Fiducials

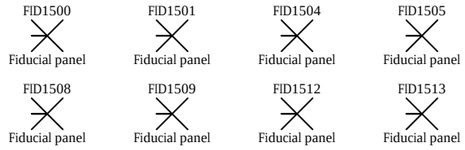


## FPGA Heat Sink

Super-Grip
optional

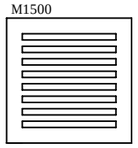


## PCB / Logo / Pin-1 Marking / Text

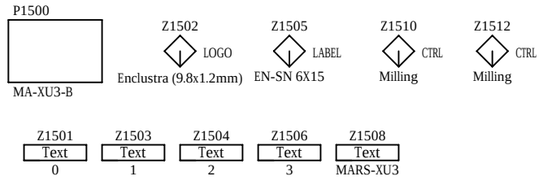

# Component Variants

| FPGA | DDR4 | | eMMC | Ethernet PHY | OSC27 | OSC24 |
|---|---|---|---|---|---|---|
| Part U208A<br>XCZU2CG-1SBVA484E<br>EN101956 | Part U800A:1<br>H5AN4G6NAFR-UHC<br>EN101655 | Part U801A:1<br>H5AN4G6NAFR-UHC<br>EN101655 | Part U1202A<br>H26M41204HPR<br>EN101733 | Part U1000A<br>KSZ9031RNXIA<br>EN101934 | Part Y902A<br>ASEMPC_27.000MHZ-LR-T<br>EN101608 | Part Y900A<br>ASDMB-24.000MHZ-LC-T<br>EN101221 |
| Part U208B<br>XCZU2EG-1SBVA484I<br>EN101820 | Part U800A:2<br>MT40A256M16GE-083E<br>EN101632 | Part U801A:2<br>MT40A256M16GE-083E<br>EN101632 | Part U1202B<br>H26M52208FPRI<br>EN101865 | | Part Y902B<br>ASEMPC-27.000MHZ-XR-T<br>EN101609 | Part Y900B<br>ASEMB_24.000MHZ-LC-T<br>EN101187 |
| Part U208C<br>XCZU3EG-2SBVA484I<br>EN101823 | Part U800B:1<br>K4A4G165WE-BIRC<br>EN101868 | Part U801B:1<br>K4A4G165WE-BIRC<br>EN101868 | Part U1202C<br>EMMC16G-IB29-PZ90<br>EN102591 | | | |
| | Part U800B:2<br>K4A4G165WF-BITD<br>EN102354 | Part U801B:2<br>K4A4G165WF-BITD<br>EN102354 | | | | |
| | Part U800C<br>K4A8G165WB-BIRC<br>EN101979 | Part U801C<br>K4A8G165WB-BIRC<br>EN101979 | | | | |

# Assembly Variants

| Assembly Variant | FPGA | DDR4 | eMMC | Ethernet PHY | OSC27 | OSC24 |
|---|---|---|---|---|---|---|
| Variant EN101981:0<br>MA-XU3-2CG-1E-D10-R2 | Option EN101981:1<br>FPGA<br>EN101956 | Option EN101981:2<br>DDR4<br>EN101868 | Option EN101981:3<br>EMMC<br>EN102591 | Option EN101981:4<br>ETH<br>EN101934 | Option EN101981:5<br>OSC27<br>EN101608 | Option EN101981:6<br>OSC24<br>EN101221 |
| Variant EN101982:0<br>MA-XU3-2EG-1I-D10-R2 | Option EN101982:1<br>FPGA<br>EN101820 | Option EN101982:2<br>DDR4<br>EN101868 | Option EN101982:3<br>EMMC<br>EN102591 | Option EN101982:4<br>ETH<br>EN101934 | Option EN101982:5<br>OSC27<br>EN101608 | Option EN101982:6<br>OSC24<br>EN101221 |
| Variant EN101983:0<br>MA-XU3-3EG-2I-D11-R2 | Option EN101983:1<br>FPGA<br>EN101823 | Option EN101983:2<br>DDR4<br>EN101979 | Option EN101983:3<br>EMMC<br>EN102591 | Option EN101983:4<br>ETH<br>EN101934 | Option EN101983:5<br>OSC27<br>EN101608 | Option EN101983:6<br>OSC24<br>EN101221 |
| Variant EN103154:0<br>MA-XU3-2EG-1I-D11-X1-R2 | Option EN103154:1<br>FPGA<br>EN101820 | Option EN103154:2<br>DDR4<br>EN101979 | Option EN103154:3<br>EMMC<br>EN102591 | Option EN103154:4<br>ETH<br>DNE | Option EN103154:5<br>OSC27<br>DNE | Option EN103154:6<br>OSC24<br>DNE |

# Component Variants

| SEC_EEPROM | OSC33 | OSC100 | L1U5 | L2U2 | RTC | USB_EQ | ETH_EQ | OSC27_EQ |
|---|---|---|---|---|---|---|---|---|
| Part U1204A DS28CN01U-A00+ EN100280<br>Part U1204B ATSHA204A-MAHDA-T EN100827 | Part Y903A ASDMB_33.333MHZ-LC-T EN100285<br>Part Y903B ASEMB_33.333MHZ-LC-T EN100914 | Part Y901A ASDMPLV-100.000MHZ-LR-T3 EN101610<br>Part Y901B ASEMPLV-100.000MHZ-LR-T EN102049 | Part L1300:1 1u5 EN101859<br>Part L1300:2 1u5 EN101860<br>Part L1303:1 1u5 EN101859<br>Part L1303:2 1u5 EN101860 | Part L1401:1 2u2 EN101850<br>Part L1401:2 2u2 EN101849<br>Part L1402:1 2u2 EN101850<br>Part L1402:2 2u2 EN101849 | R900, C900, C901, Y904 C1411, C1412, U1401<br>or<br>DNE | R905, U1100, R1100, R1101, R1102, C1100 C1101, C1102<br>or<br>DNE | C1000 C1001, C1002, C1003, L1000, C1004, C1005, C1006, C1007, L1001, C1012, C1013, C1014, D1000, R1002, R1003, R1004, R1005, R1006, R1001, C1011, C1016, Y1000<br>or<br>DNE | R902, R904, R908, C904, C905<br>or<br>DNE |

# Assembly Variants

| SEC_EEPROM | OSC33 | OSC100 | L1U5 | L2U2 | RTC | USB_EQ | ETH_EQ | OSC27_EQ |
|---|---|---|---|---|---|---|---|---|
| Option EN101981:7 SEC_EEPROM EN100827<br>Option EN101982:7 SEC_EEPROM EN100827<br>Option EN101983:7 SEC_EEPROM EN100827<br>Option EN103154:7 SEC_EEPROM EN100827 | Option EN101981:8 OSC33 EN100914<br>Option EN101982:8 OSC33 EN100914<br>Option EN101983:8 OSC33 EN100914<br>Option EN103154:8 OSC33 EN100914 | Option EN101981:9 OSC100 EN101610<br>Option EN101982:9 OSC100 EN101610<br>Option EN101983:9 OSC100 EN101610<br>Option EN103154:9 OSC100 EN101610 | Option EN101981:10 L1U5 EN101860<br>Option EN101982:10 L1U5 EN101860<br>Option EN101983:10 L1U5 EN101860<br>Option EN103154:10 L1U5 EN101860 | Option EN101981:11 L2U2 EN101850<br>Option EN101982:11 L2U2 EN101850<br>Option EN101983:11 L2U2 EN101850<br>Option EN103154:11 L2U2 EN101850 | Option EN101981:12 RTC<br>Option EN101982:12 RTC<br>Option EN101983:12 RTC<br>Option EN103154:12 RTC DNE | Option EN101981:13 USB_EQ<br>Option EN101982:13 USB_EQ<br>Option EN101983:13 USB_EQ<br>Option EN103154:13 USB_EQ DNE | Option EN101981:14 ETH_EQ<br>Option EN101982:14 ETH_EQ<br>Option EN101983:14 ETH_EQ<br>Option EN103154:14 ETH_EQ DNE | Option EN101981:15 OSC27_EQ<br>Option EN101982:15 OSC27_EQ<br>Option EN101983:15 OSC27_EQ<br>Option EN103154:15 OSC27_EQ DNE |