Enclustra User Schematics

Mars ZX2 Revision 2.0

Disclaimer

User schematics do not include proprietary Enclustra design elements, such as power supply circuits.
These circuits use optimized designs which are extremely compact and remain proprietary to Enclustra.
The user manual provides all necessary information to use the module and its interfaces.

User schematics are provided after purchase of Enclustra hardware, and may also be provided in certain cases before purchase, to assist in product evaluation.
No part of the schematics may be copied or modified without written permission from Enclustra.

Full schematics, including a full bill-of-materials, may be available through the purchase of a hardware licence for the product in question.
Please contact Enclustra Sales for more information.

Note: DNE = Do Not Equip (parts not equipped by default)

© Enclustra GmbH

Mars ZX2 SoC Module

Revision 2.0

Sheet 1: Cover
Sheet 2: FPGA Configuration / PS Boot Mode
Sheet 3: FPGA Bank 13 / 34 / 35 / User LEDs
Sheet 4: FPGA PS DDR / MIO
Sheet 5: FPGA Power / Decoupling
Sheet 6: SO-DIMM Connector
Sheet 7: Oscillator / Real-time Clock / Secure EEPROMs
Sheet 8: Gigabit Ethernet PHY
Sheet 9: USB 2.0 PHY
Sheet 10: FLASH Memory / I2C Interface
Sheet 11: DDR3L SDRAM
Sheet 12: Power Converters 1.8V / 1.35V
Sheet 13: Power Converter 1.0V
Sheet 14: Mechanics
Sheet 15: Assembly Variants

FPGA Configuration

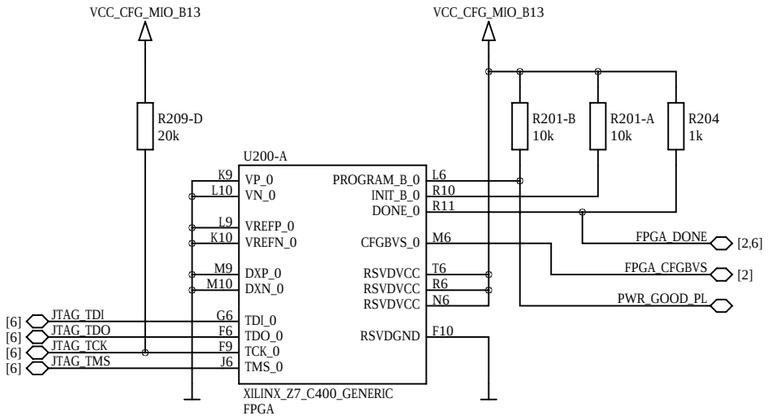

TDI and TMS have internal pullups.

PS Boot Mode

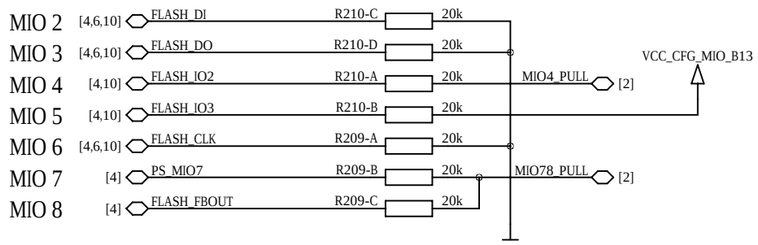

Boot Modes

	Boot Mode	Mode
Default	0	QSPI
	1	SD Card

Pull-Up During Configuration

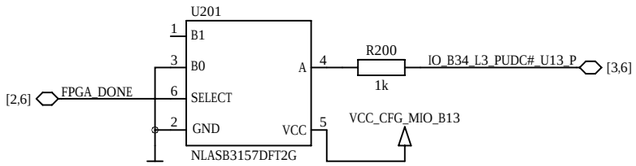

CVS Voltage Detection

not included in user schematics

This part is intentionally left blank.

Boot Logic

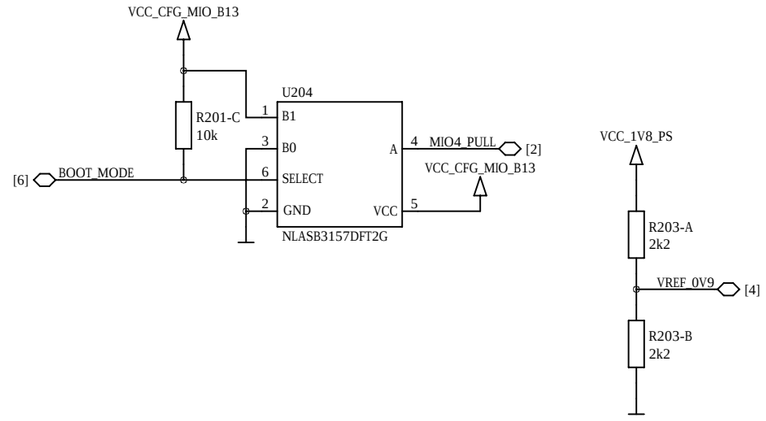

Reset Circuit

optional

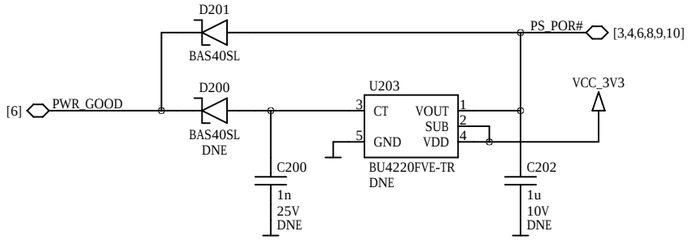

Series Resistors

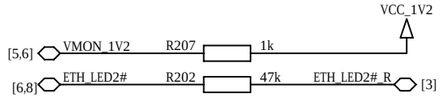

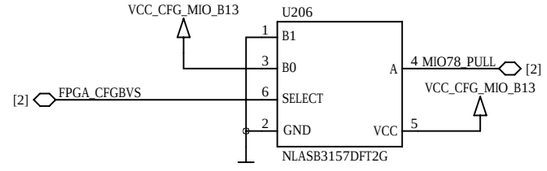

FPGA Bank 13

Not availabe on XC7Z010 device.

VCCO = VCC_CFG_MIO_B13

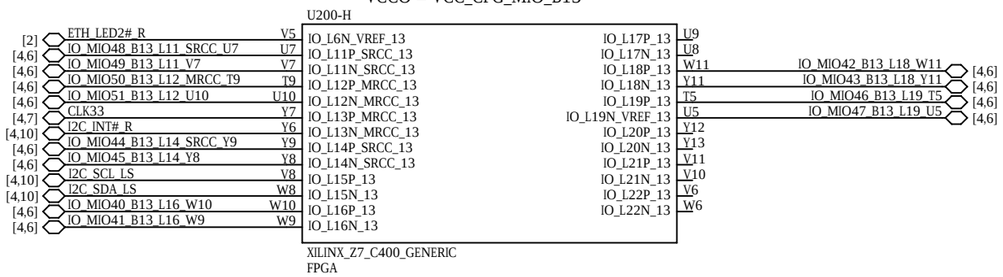

FPGA Bank 34

VCCO = VCC_IO_B34

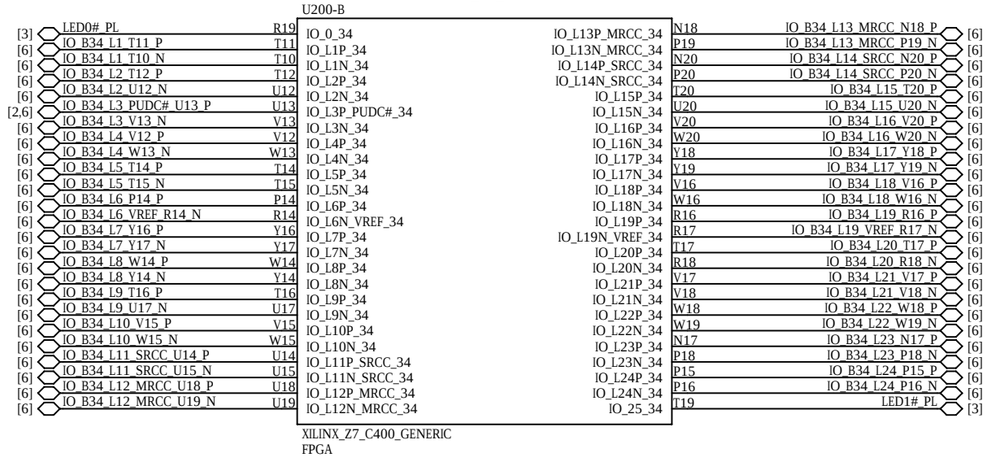

FPGA Bank 35

VCCO = VCC_IO_B35

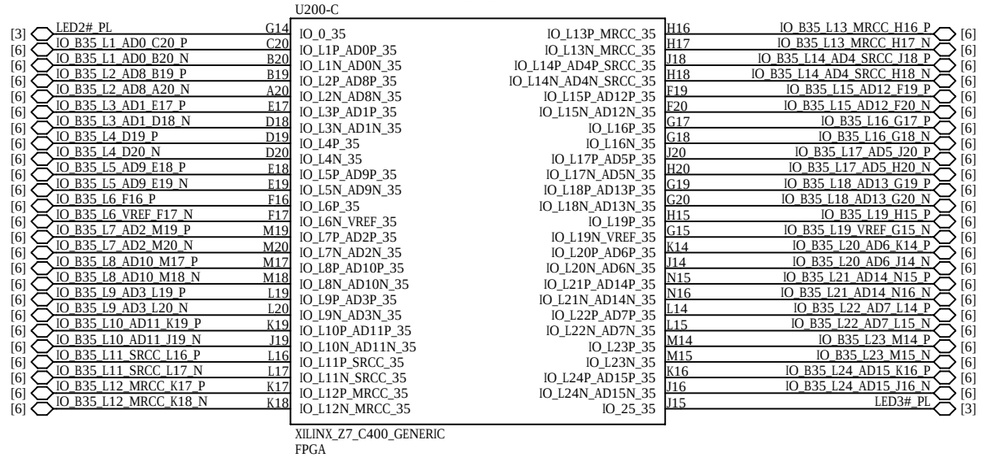

User LEDs

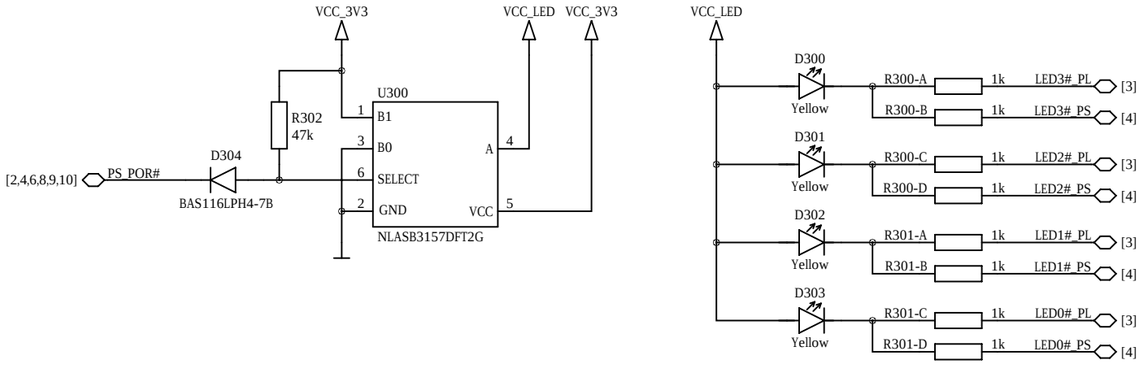

ENCLUSTRA	Copyright © 2018 by Enclustra GmbH	Sheet Name 3_FPGA_BANK13/34/35_USER_LEDS	Customer No 0000	Revision R2.0	DNE = do not equip	Confidential	
	Company Enclustra GmbH	Project Mars ZX2	Project No 425	Designed MHEI	Date 11 Dec 2018	Sheet/sheets 3 / 15	

PS DDR

VCCO = VCC_1V35

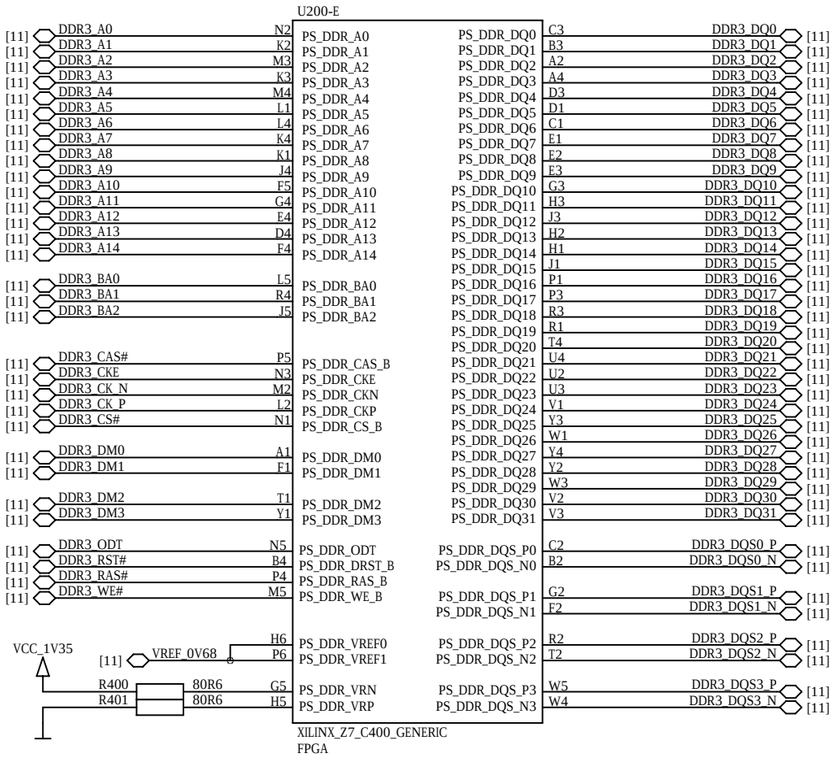

PS MIO

VCCO = VCC_CFG_MIO_B13

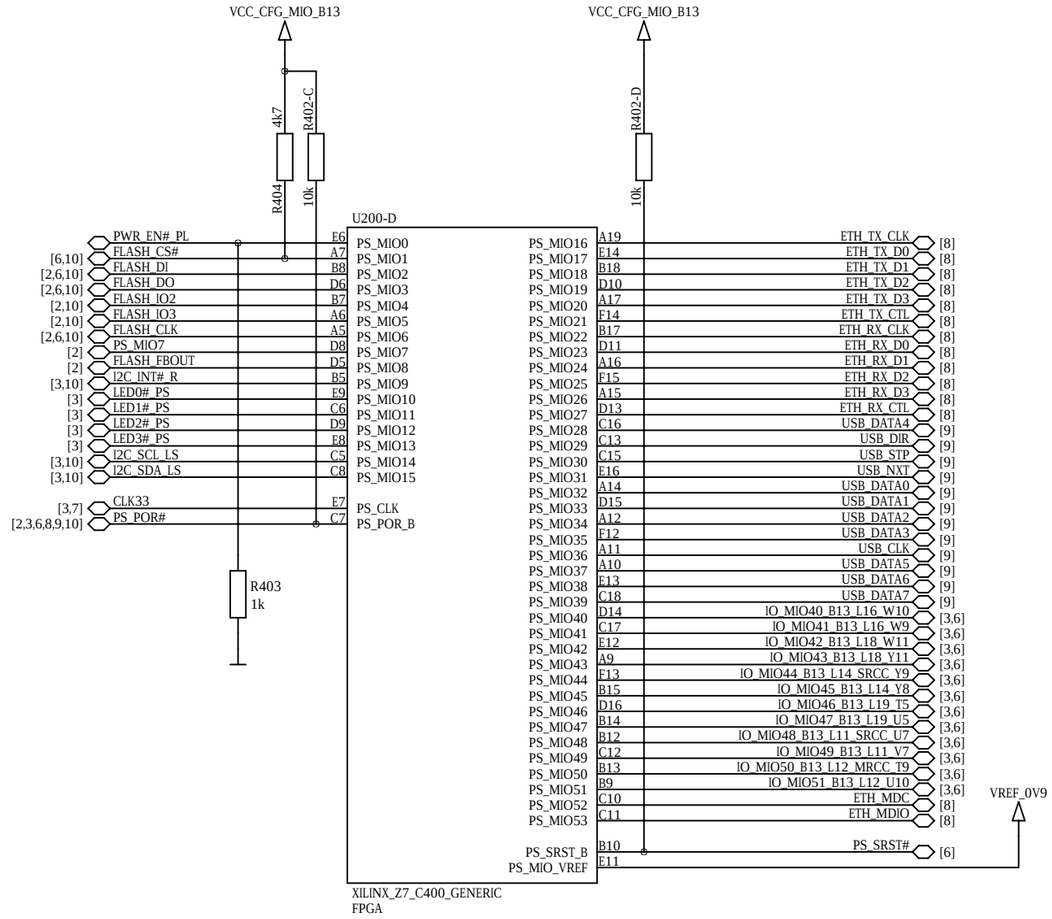

PS DDR3L VREF Decoupling

not included in user schematics

This part is intentionally left blank.

FPGA Decoupling

not included in user schematics

This part is intentionally left blank.

FPGA Ground

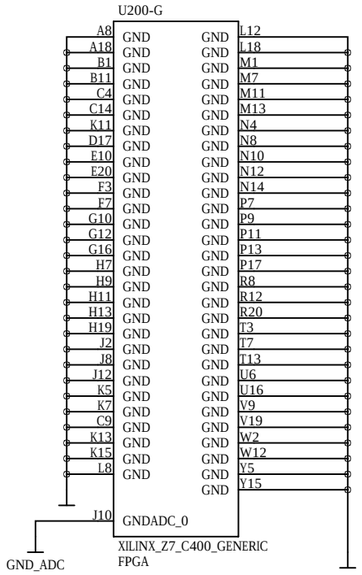

FPGA Power

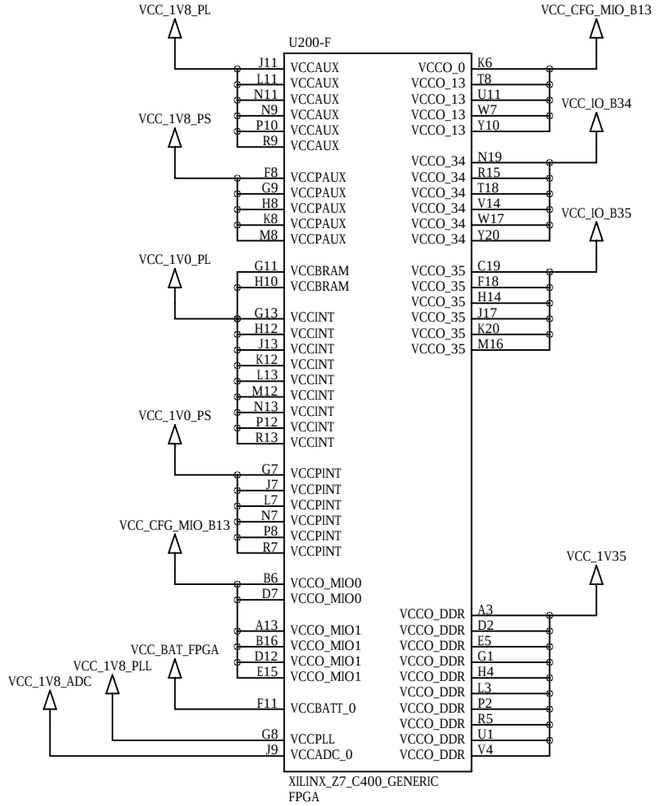

ADC Power Filter

not included in user schematics

This part is intentionally left blank.

PS PLL Power Filter

not included in user schematics

This part is intentionally left blank.

FPGA Battery Voltage

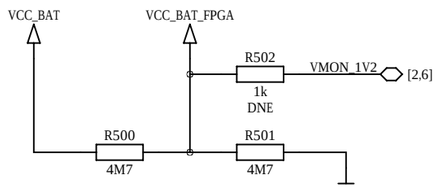

ENCLUSTRA	Copyright	© 2018 by Enclustra GmbH	Sheet Name	5_FPGA_POWER_DECOUPLING	Customer No	0000	Revision	R2.0	DNE = do not equip	Confidential
	Company	Enclustra GmbH	Project	Mars ZX2	Project No	425	Designed	MHEI	Date 11 Dec 2018	Sheet/sheets 5 / 15

SO-DIMM Connector

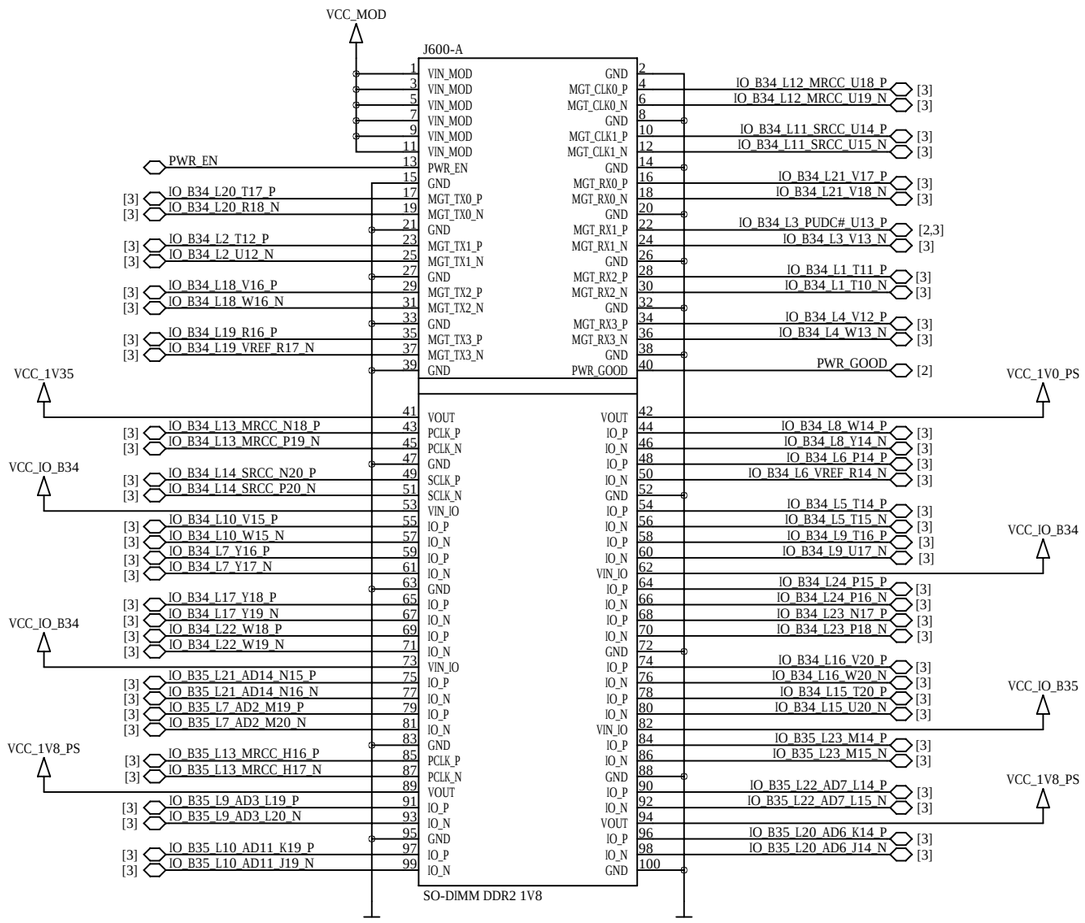

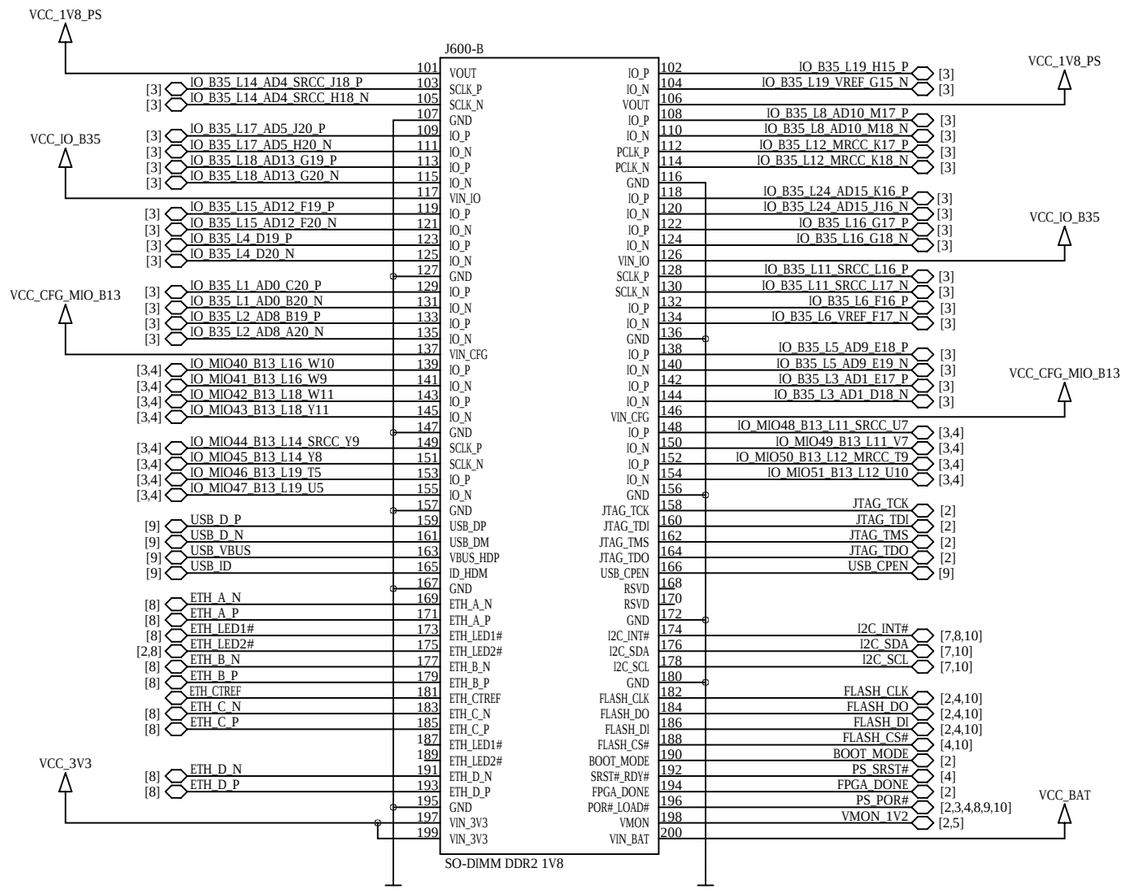

ENCLUSTRA	Copyright © 2018 by Enclustra GmbH	Sheet Name 6_SO-DIMM_CONNECTOR	Customer No 0000	Revision R2.0	DNE = do not equip	Confidential	
	Company Enclustra GmbH	Project Mars ZX2	Project No 425	Designed MHEI	Date 11 Dec 2018	Sheet/sheets 6 / 15	

Real-time Clock

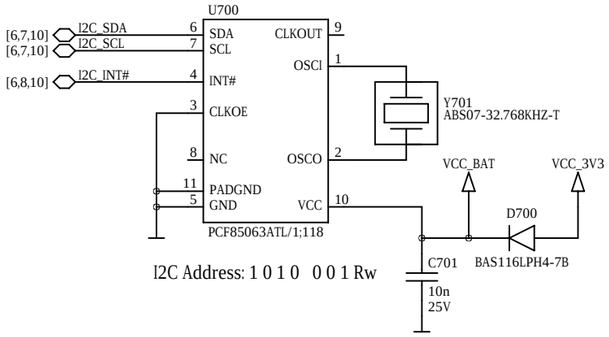

I2C Address: 1 0 1 0 0 0 1 Rw

Secure EEPROMs

for Enclustra use only

only one EEPROM can be mounted

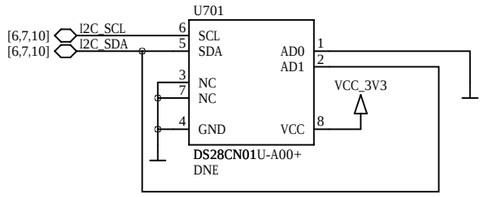

I2C Address: 1 0 1 1 1 0 0 Rw

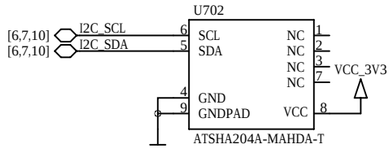

I2C Address: 1 1 0 0 1 0 0 Rw

Oscillator

only one oscillator can be mounted

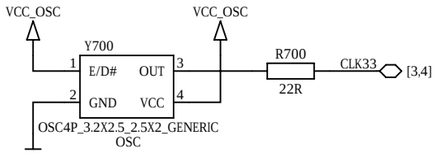

Oscillator Supply Filter

not included in user schematics

This part is intentionally left blank.

Power Decoupling

not included in user schematics

This part is intentionally left blank.

ENCLUSTRA	Copyright	© 2018 by Enclustra GmbH	Sheet Name	7_OSCILLATOR_RTC_EEPROM	Customer No	0000	Revision	R2.0	DNE = do not equip	Confidential
	Company	Enclustra GmbH	Project	Mars ZX2	Project No	425	Designed	MHEI	Date 11 Dec 2018	Sheet/sheets 7 / 15

Gigabit Ethernet PHY

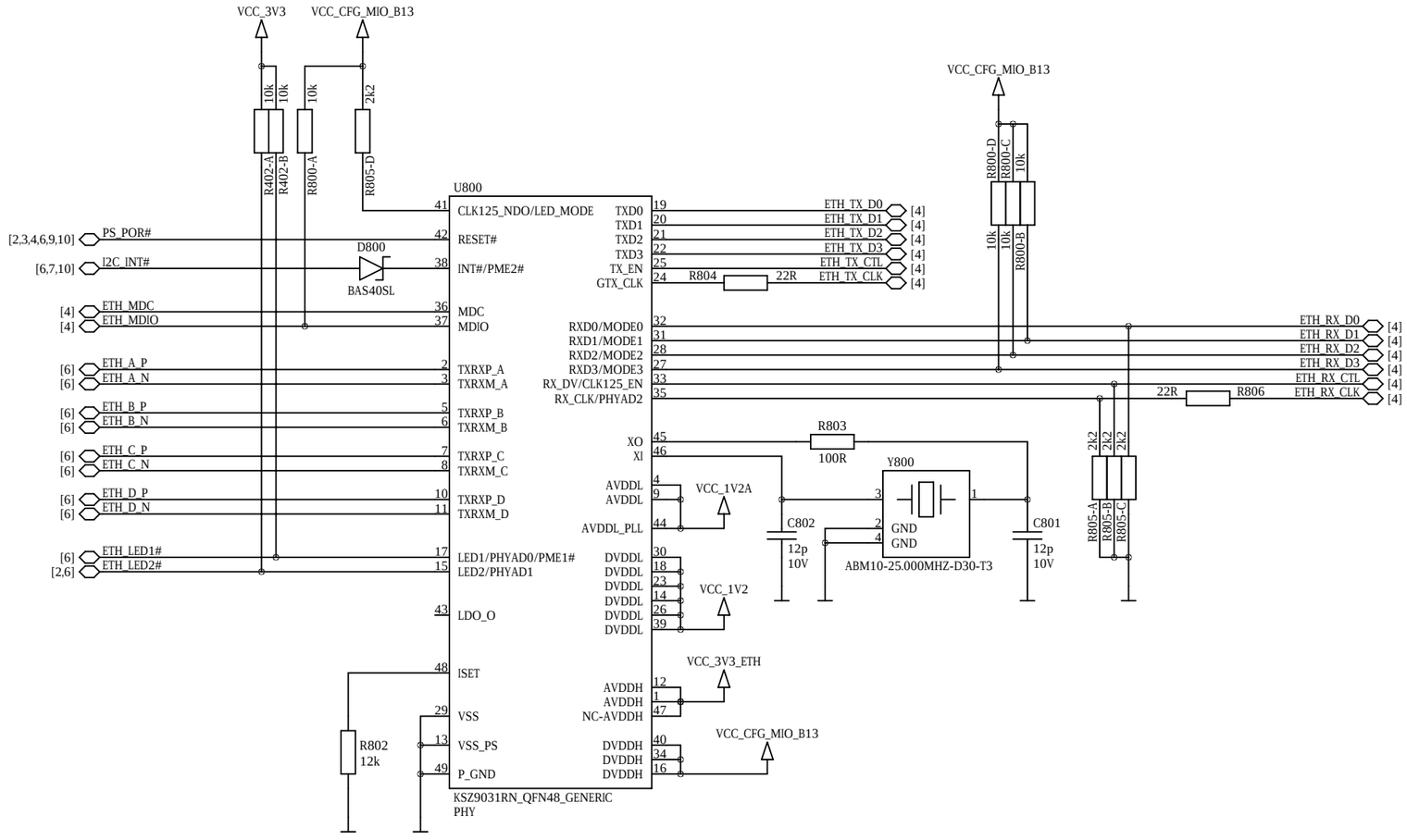

MODE<3:0> = 1110 -> RGMII, all capabilities
LED_Mode Pull up = Single LED
PhyAddress <2:0> = 011 -> 3
LED1 and LED2 are active low

Gigabit Ethernet Power

not included in user schematics

This part is intentionally left blank.

ENCLUSTRA	Copyright	© 2018 by Enclustra GmbH	Sheet Name	8_GIGABIT_ETHERNET_PHY	Customer No	0000	Revision	R2.0	DNE = do not equip	Confidential
	Company	Enclustra GmbH	Project	Mars ZX2	Project No	425	Designed	MHEI	Date 11 Dec 2018	Sheet/sheets 8 / 15

USB 2.0 PHY

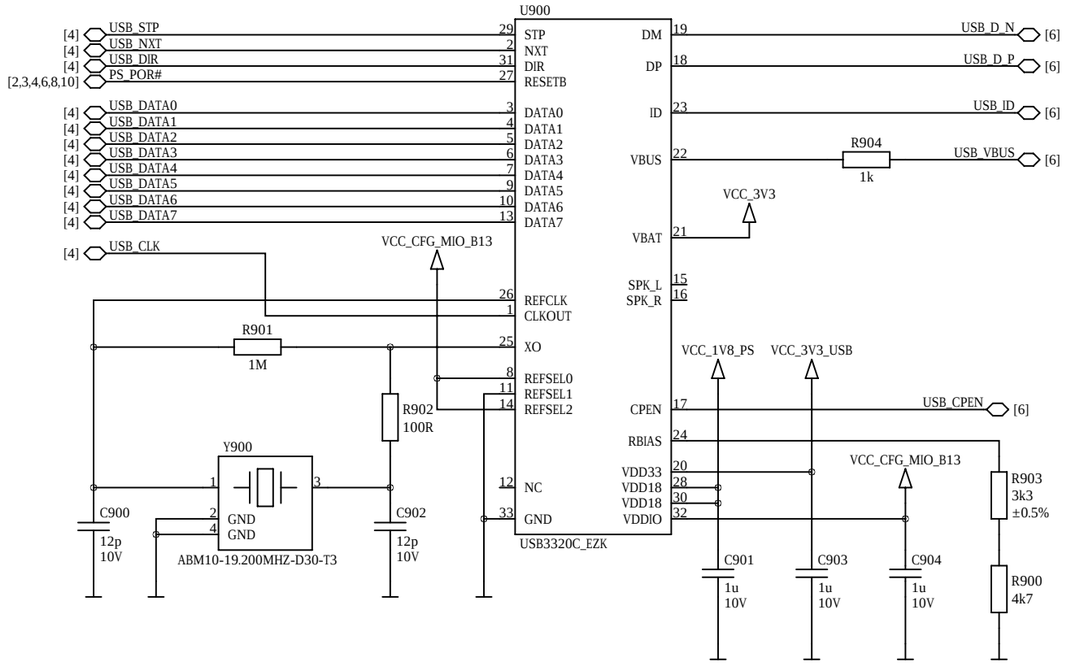

ENCLUSTRA	Copyright	© 2018 by Enclustra GmbH	Sheet Name	9_USB_PHY	Customer No 0000	Revision R2.0	DNE = do not equip	Confidential
	Company	Enclustra GmbH	Project	Mars ZX2	Project No 425	Designed MHEI	Date 11 Dec 2018	Sheet/sheets 9 / 15

Quad SPI Flash

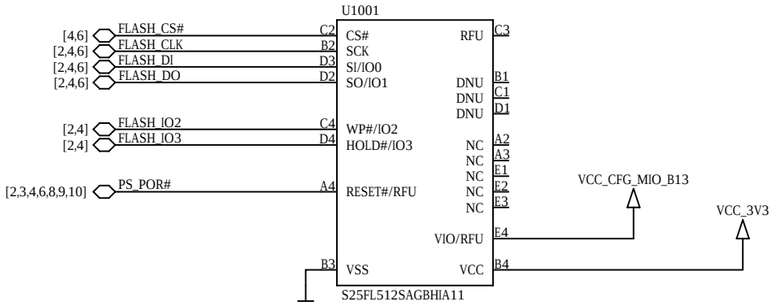

I2C Level Shifter

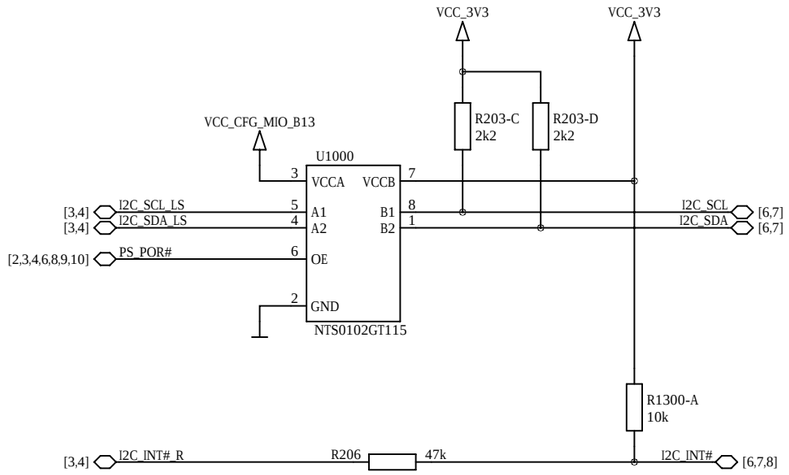

ENCLUSTRA	Copyright © 2018 by Enclustra GmbH	Sheet Name 10_FLASH_I2C	Customer No 0000	Revision R2.0	DNE = do not equip	Confidential	
	Company Enclustra GmbH	Project Mars ZX2	Project No 425	Designed MHEI	Date 11 Dec 2018	Sheet/sheets 10 / 15	

DDR3L SDRAM Bytes 0-1

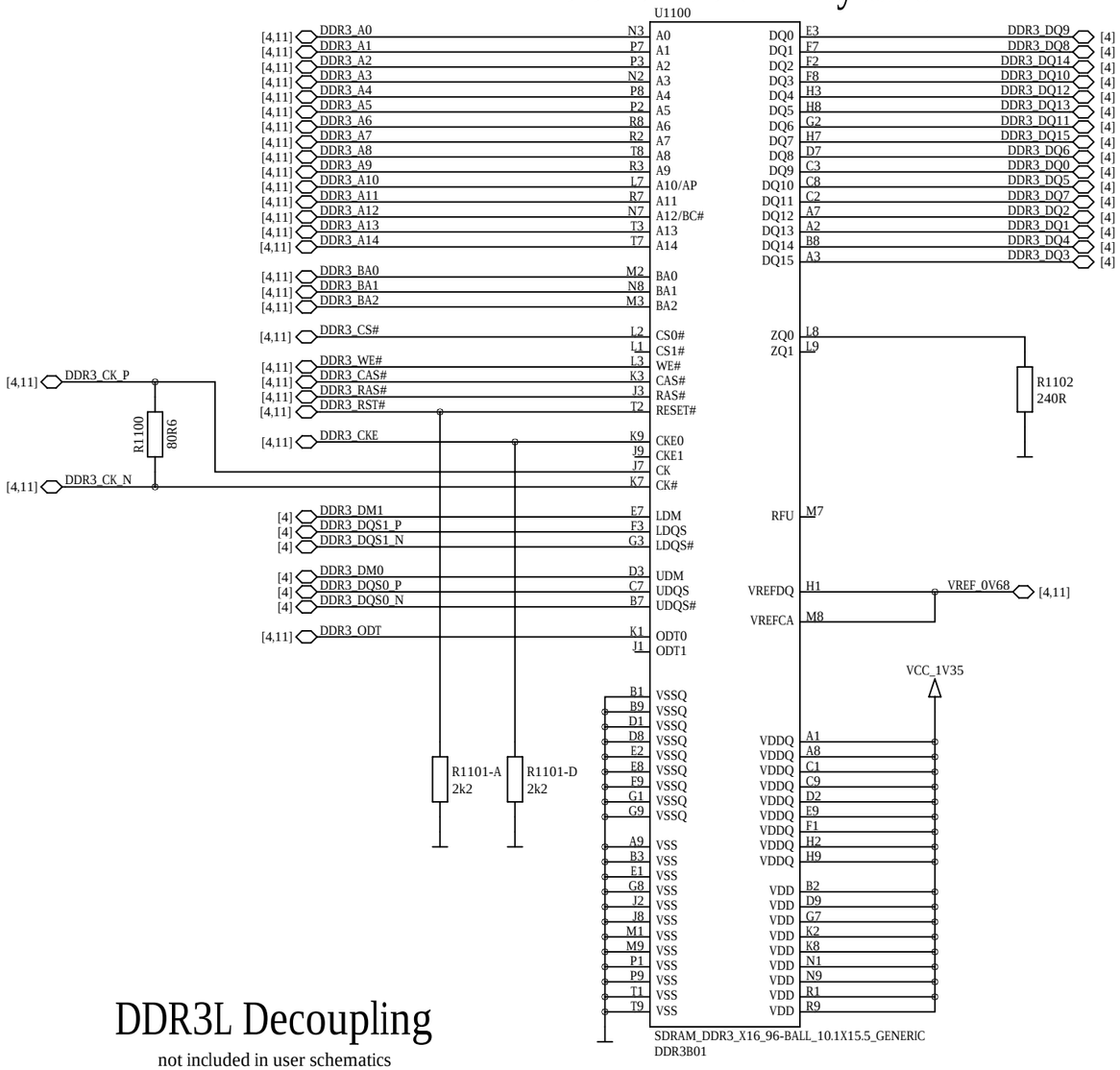

DDR3L SDRAM Bytes 2-3

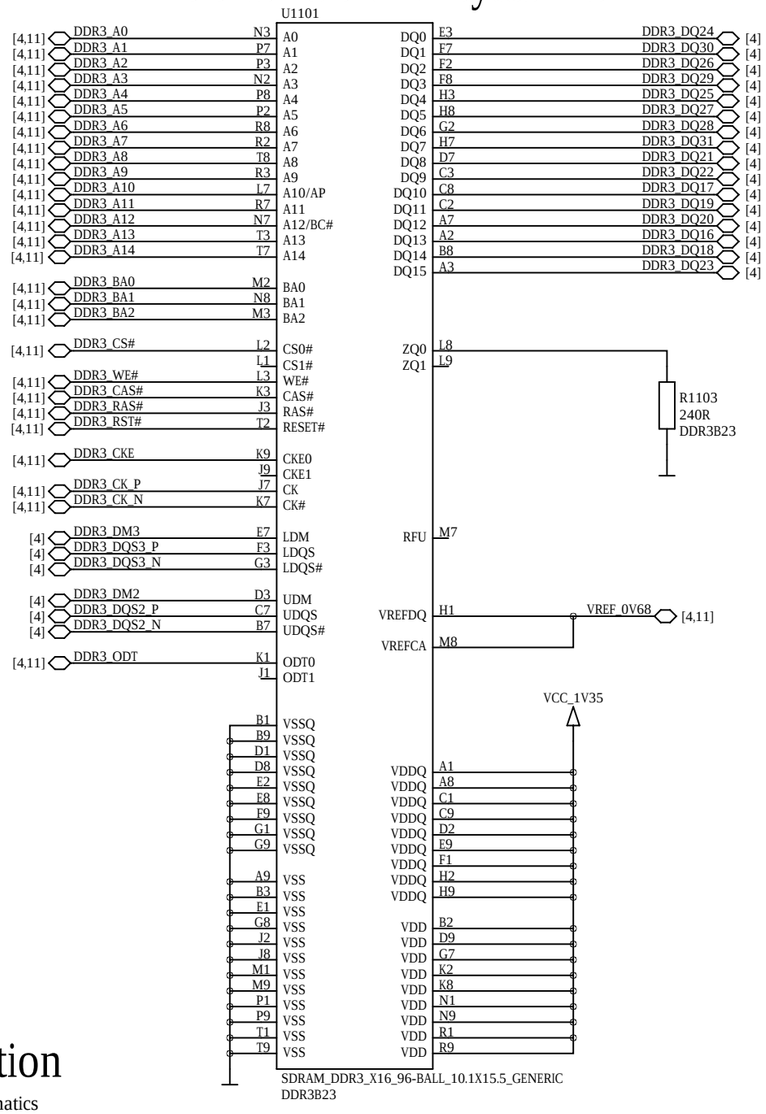

DDR3L Decoupling

not included in user schematics

This part is intentionally left blank.

VREF Generation

not included in user schematics

This part is intentionally left blank.

Dual DC/DC Converter

Channel 2: 1.8V +-5% 1.5A

Channel 1: 1.35V +-5% 1A

not included in user schematics

This part is intentionally left blank.

Power Input Filter

not included in user schematics

This part is intentionally left blank.

Supported Voltage Ranges

Power Rail	Direction	Range	Tolerance
VCC_MOD	input	3.3V - 5.0V	±10%
VCC_3V3	input	3.3V	±5%
VCC_IO_B34	input	1.8V(*) - 3.3V	±5%
VCC_IO_B35	input	1.8V(*) - 3.3V	±5%
VCC_CFG_MIO_B13	input	1.8V , 2.5V - 3.3V	±5%
VCC_BAT	input	2.0V - 3.6V	-
VCC_1V0	output	1.0V	±5%
VCC_1V35	output	1.35V	±5%
VCC_1V8	output	1.8V	±5%

Bank 34 and 35 can run down to 1.2V, but the FPGA LEDs will always be on.

PL Power Enable

not included in user schematics

This part is intentionally left blank.

PL Power Switch

not included in user schematics

This part is intentionally left blank.

Dual DC/DC Converter

Channel 2: 1.0V +-5% 1.5A

Channel 1: 1.0V +-5% 1A

not included in user schematics

This part is intentionally left blank.

Mounting Holes

compatible with Mars Heat Sink

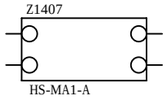

Heatsink

Super-Grip

optional

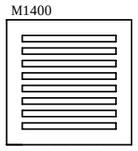

Fiducials

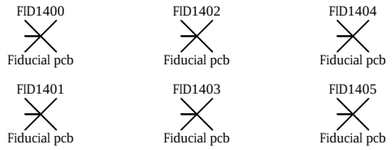

Panel Fiducials

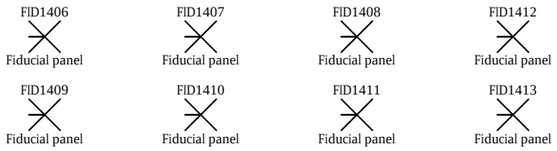

PCB

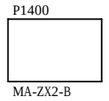

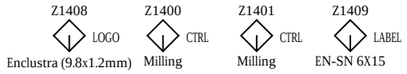

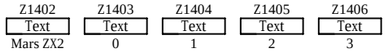

ENCLUSTRA	Copyright © 2018 by Enclustra GmbH	Sheet Name 14_MECHANICS	Customer No 0000	Revision R2.0	DNE = do not equip	Confidential	
	Company Enclustra GmbH	Project Mars ZX2	Project No 425	Designed MHEI	Date 11 Dec 2018	Sheet/sheets 14 / 15	

Component Variants

FPGA	DDR3B01	DDR3B23	Ethernet PHY	OSC	L2U2		PWR_SW
Part U200A XC7Z010-1CLG400C EN101062	Part U1100A:1 K4B4G1646D-BMK0 EN101528	Part U1101A:1 K4B4G1646D-BMK0 EN101528	Part U800A KSZ9031RNXIA EN101934	Part Y700A ASDMB_33.333MHZ-LC-T EN100285	Part L1201A 2u2 EN101849	Part L1204A 2u2 EN101849	Part Q1200A DMC2038LVT EN100503
Part U200B XC7Z010-2CLG400I EN101025	Part U1100A:2 H5TC4G63CFR-RDI EN101580	Part U1101A:2 H5TC4G63CFR-RDI EN101580	Part U800B KSZ9031RNXCA EN100202	Part Y700B ASEMB_33.333MHZ-LC-T EN100914	Part L1201B 2u2 EN101850	Part L1204B 2u2 EN101850	Part Q1200B QS6J11TR EN102282
Part U200C XC7Z020-1CLG400C EN101064	Part U1100A:3 K4B4G1646E-BMMA EN102238	Part U1101A:3 K4B4G1646E-BMMA EN102238			Part L1300A 2u2 EN101849	Part L1302A 2u2 EN101849	
Part U200D XC7Z020-2CLG400I EN101026	Part U1100A:4 NT5CC256M16ER-EKI EN102239	Part U1101A:4 NT5CC256M16ER-EKI EN102239			Part L1300B 2u2 EN101850	Part L1302B 2u2 EN101850	
	Part U1100B NT5CC256M16CP-DI EN101027	Part U1101B NT5CC256M16CP-DI EN101027					
		R1103					

Assembly Variants

Assembly Variant	FPGA	DDR3B01	DDR3B23	Ethernet PHY	OSC	L2U2	PWR_SW
Variant EN101497:0 MA-ZX2-10-1C-D9-R2	Option EN101497:1 FPGA EN101062	Option EN101497:2 DDR3B01 EN101027	Option EN101497:3 DDR3B23 DNE	Option EN101497:4 PHY EN100202	Option EN101497:5 OSC EN100914	Option EN101497:6 L2U2 EN101850	Option EN101497:7 PWR_SW EN102282
Variant EN101498:0 MA-ZX2-10-2I-D9-R2	Option EN101498:1 FPGA EN101025	Option EN101498:2 DDR3B01 EN102238	Option EN101498:3 DDR3B23 DNE	Option EN101498:4 PHY EN101934	Option EN101498:5 OSC EN100914	Option EN101498:6 L2U2 EN101850	Option EN101498:7 PWR_SW EN102282
Variant EN101499:0 MA-ZX2-20-1C-D9-R2	Option EN101499:1 FPGA EN101064	Option EN101499:2 DDR3B01 EN101027	Option EN101499:3 DDR3B23 DNE	Option EN101499:4 PHY EN100202	Option EN101499:5 OSC EN100914	Option EN101499:6 L2U2 EN101850	Option EN101499:7 PWR_SW EN102282
Variant EN101500:0 MA-ZX2-20-2I-D9-R2	Option EN101500:1 FPGA EN101026	Option EN101500:2 DDR3B01 EN102238	Option EN101500:3 DDR3B23 DNE	Option EN101500:4 PHY EN101934	Option EN101500:5 OSC EN100914	Option EN101500:6 L2U2 EN101850	Option EN101500:7 PWR_SW EN102282