Enclustra User Schematics

Mars ZX3 Revision 7.0

Disclaimer

User schematics do not include proprietary Enclustra design elements, such as power supply circuits.
These circuits use optimized designs which are extremely compact and remain proprietary to Enclustra.
The user manual provides all necessary information to use the module and its interfaces.

User schematics are provided after purchase of Enclustra hardware, and may also be provided in certain cases before purchase, to assist in product evaluation.
No part of the schematics may be copied or modified without written permission from Enclustra.

Full schematics, including a full bill-of-materials, may be available through the purchase of a hardware licence for the product in question.
Please contact Enclustra Sales for more information.

Note: DNE = Do Not Equip (parts not equipped by default)

© Enclustra GmbH

Mars ZX3 SoC Module

Revision 7.0

Sheet 1: Cover
Sheet 2: FPGA Configuration / PS Boot Mode
Sheet 3: FPGA Bank 13 / 33 / 34 / 35 / User LEDs
Sheet 4: FPGA PS DDR / MIO
Sheet 5: FPGA Power / Decoupling
Sheet 6: SO-DIMM Connector
Sheet 7: Clock / Real-time Clock / Secure EEPROMs
Sheet 8: Gigabit Ethernet PHY
Sheet 9: USB PHY
Sheet 10: FLASH Memory
Sheet 11: DDR3L SDRAM
Sheet 12: Power Converters 1.5V / 1.35V / 1.8V
Sheet 13: Power Converter 1.0V / Sequencing
Sheet 14: Mechanics
Sheet 15: Assembly variants

FPGA Configuration

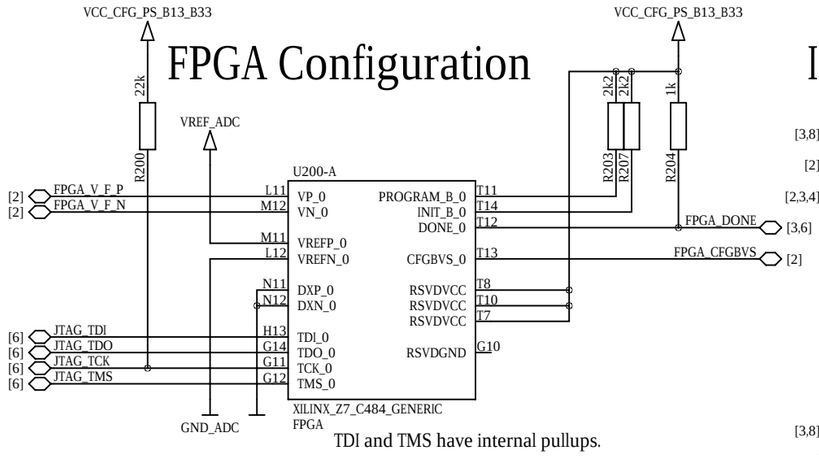

TDI and TMS have internal pullups.

I2C / MDIO Multiplexer

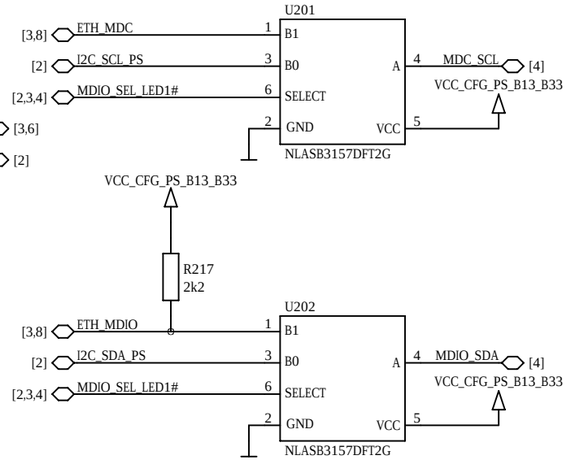

Boot Modes

	BOOT_MODE	Boot Source
Default	0 1	QSPI Flash SD-Card

PS Boot Mode

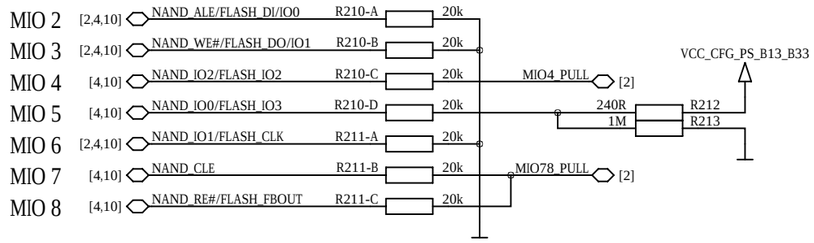

CVS Voltage Detection

not included in user schematics

This part is intentionally left blank.

ADC Anti-Alias Filter

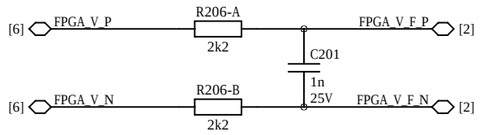

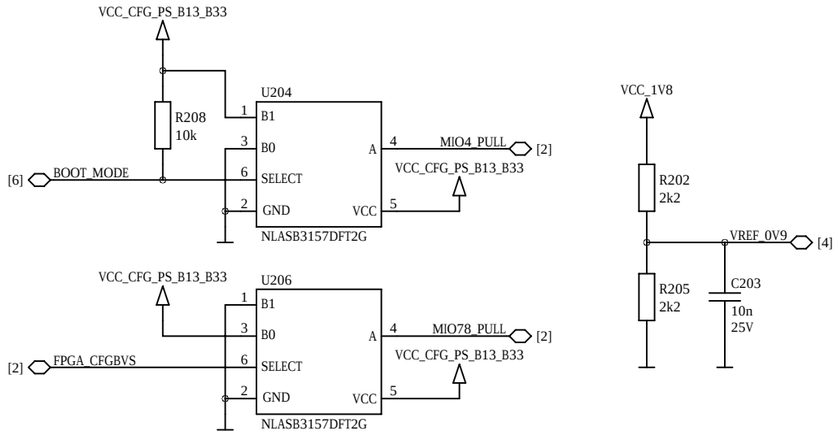

Reset Circuit

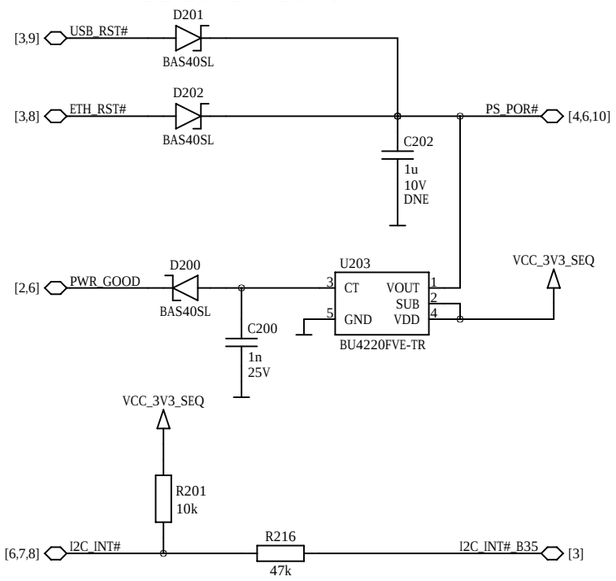

I2C Level Shifters

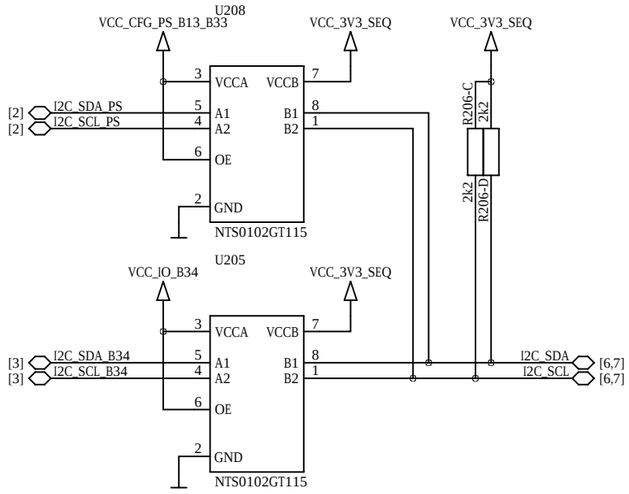

Series Resistors

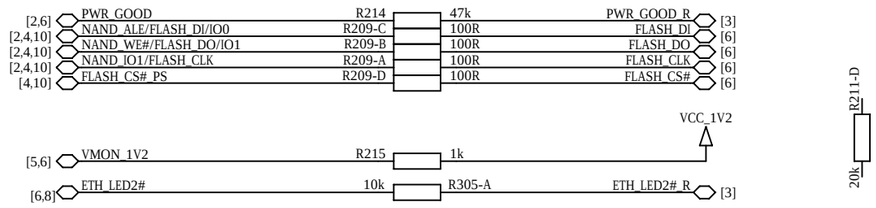

FPGA Bank 33

VCCO = VCC_CFG_PS_B13_B33

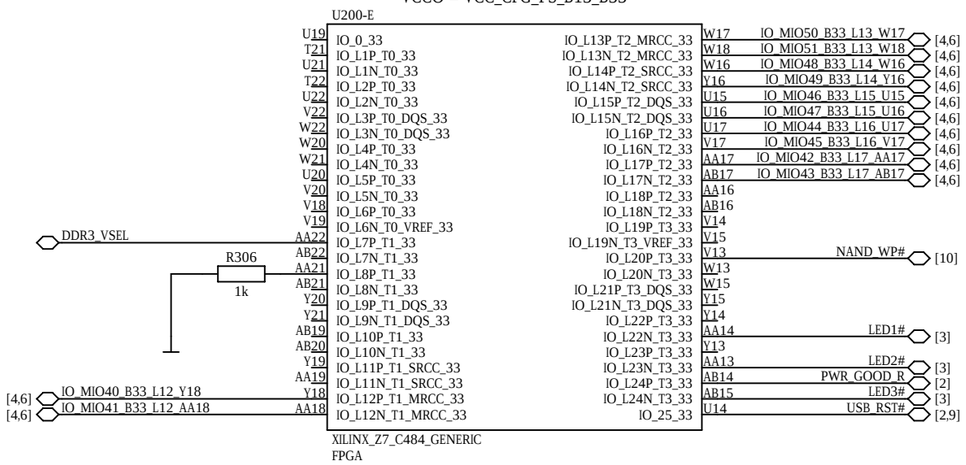

FPGA Bank 13

VCCO = VCC_CFG_PS_B13_B33

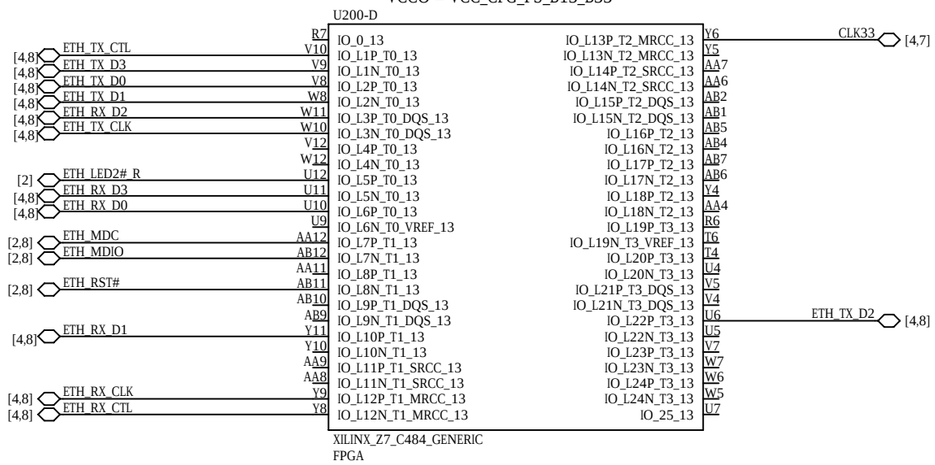

FPGA Bank 34

VCCO = VCC_IO_B34

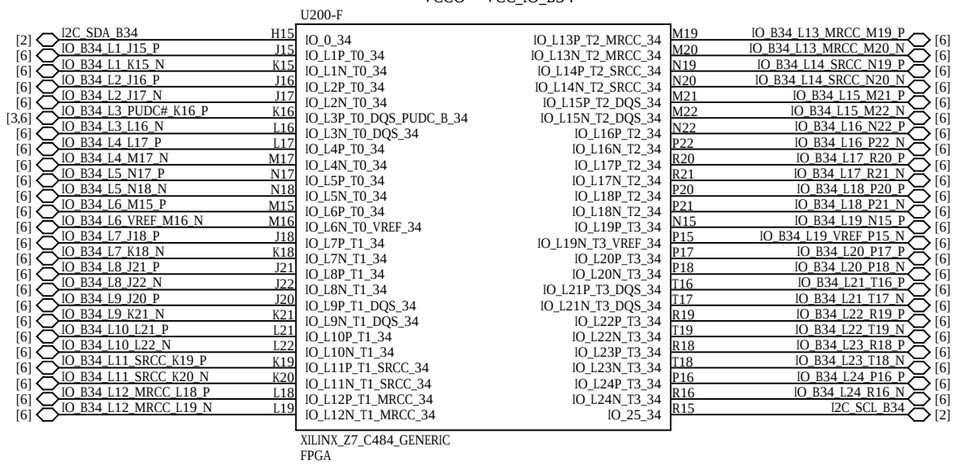

FPGA Bank 35

VCCO = VCC_IO_B35

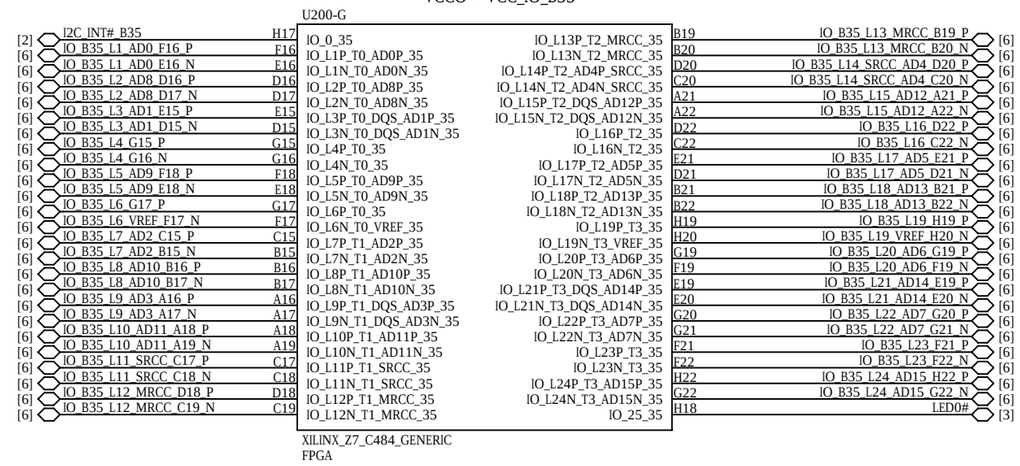

User LEDs

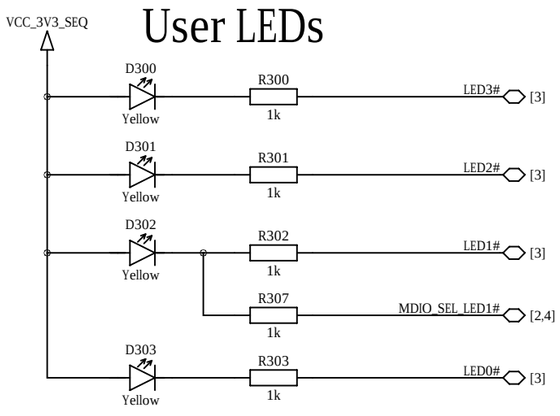

Pull-Up During Configuration

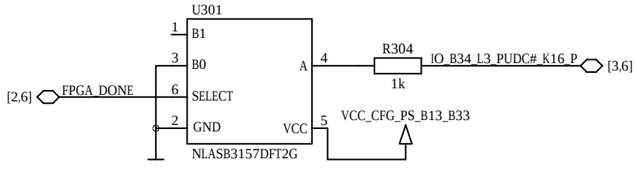

ENCLUSTRA	Copyright © 2019 by Enclustra GmbH	Sheet Name 3_FPGA_BANK13/33/34/35/USER_LEDS	Customer No 0000	Revision R7.0	DNE = do not equip	Confidential	
	Company Enclustra GmbH	Project Mars ZX3	Project No 429	Designed MHEI	Date 06 Dec 2019	Sheet/sheets 3 / 15	

PS DDR

VCCO = VCC_DDR3L

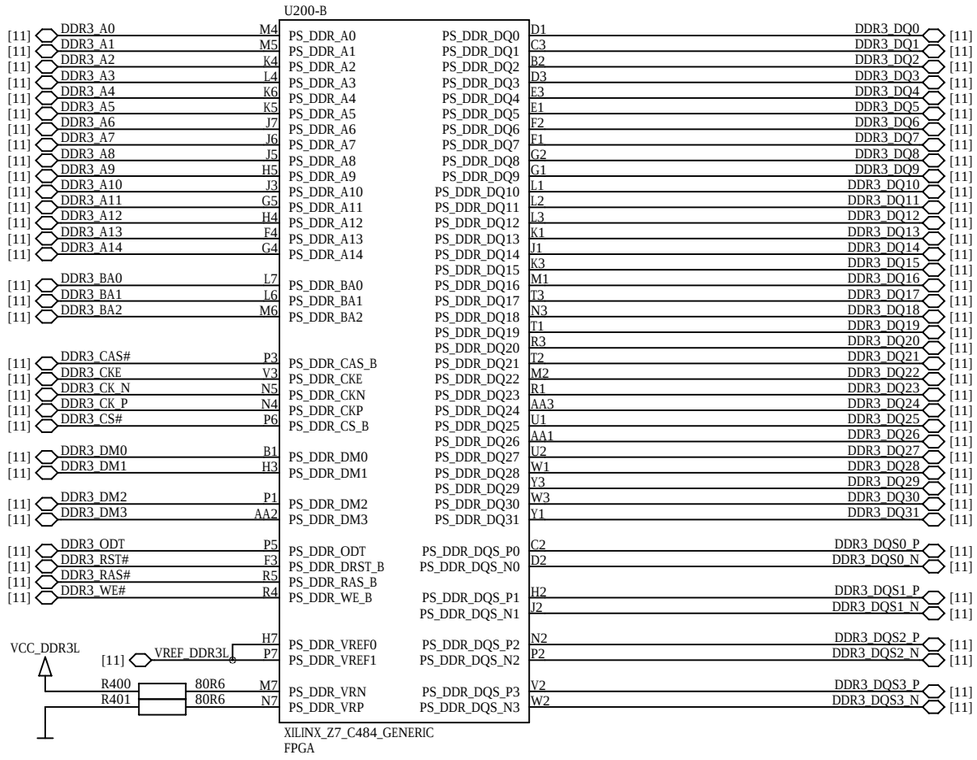

PS MIO

VCCO = VCC_CFG_PS_B13_B33

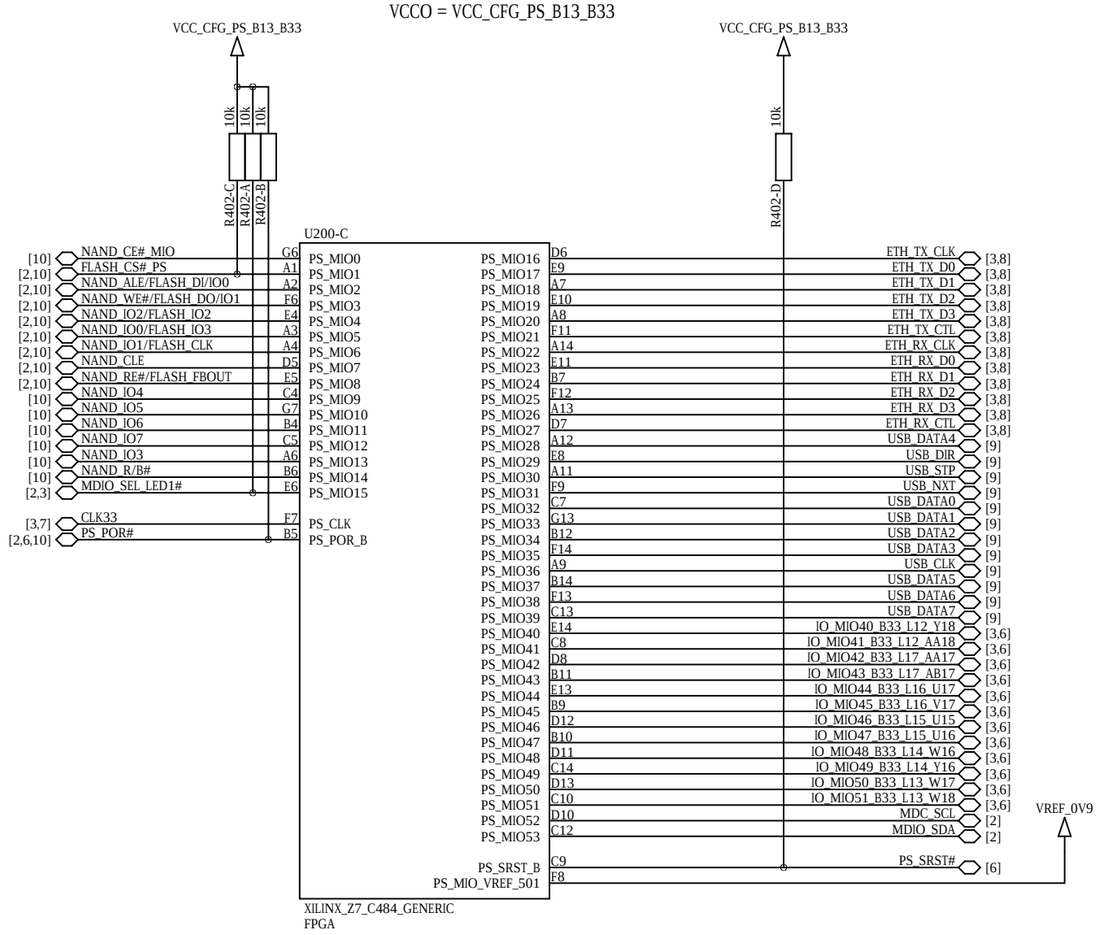

ENCLUSTRA	Copyright © 2019 by Enclustra GmbH	Sheet Name 4_FPGA_PS_DDR/MIO	Customer No 0000	Revision R7.0	DNE = do not equip	Confidential	
	Company Enclustra GmbH	Project Mars ZX3	Project No 429	Designed MHEI	Date 06 Dec 2019	Sheet/sheets 4 / 15	

FPGA Decoupling

not included in user schematics

This part is intentionally left blank.

FPGA Ground

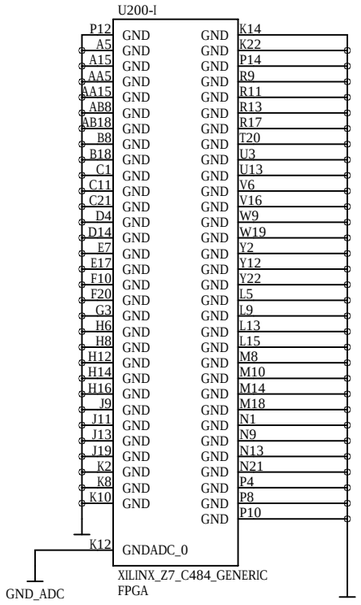

FPGA Power

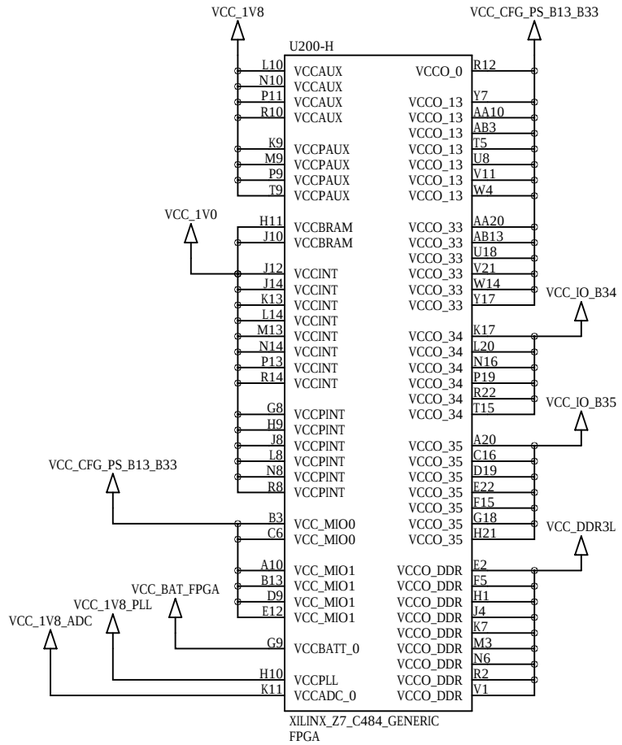

ADC Power Filter

not included in user schematics

This part is intentionally left blank.

ADC Voltage Reference

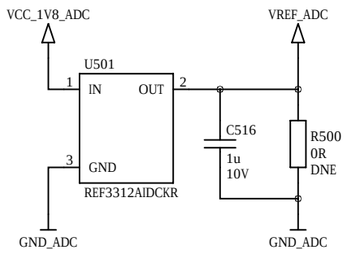

FPGA Battery Voltage

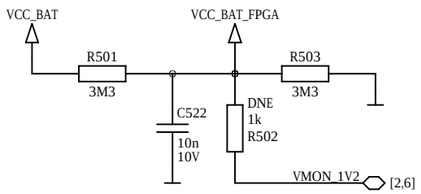

PS PLL Power Filter

not included in user schematics

This part is intentionally left blank.

PS DDR3L VREF Decoupling

not included in user schematics

This part is intentionally left blank.

ENCLUSTRA	Copyright	© 2019 by Enclustra GmbH	Sheet Name	5_FPGA_POWER/DECOUPLING	Customer No	0000	Revision	R7.0	DNE = do not equip	Confidential
	Company	Enclustra GmbH	Project	Mars ZX3	Project No	429	Designed	MHEI	Date 06 Dec 2019	Sheet/sheets 5 / 15

SO-DIMM Connector

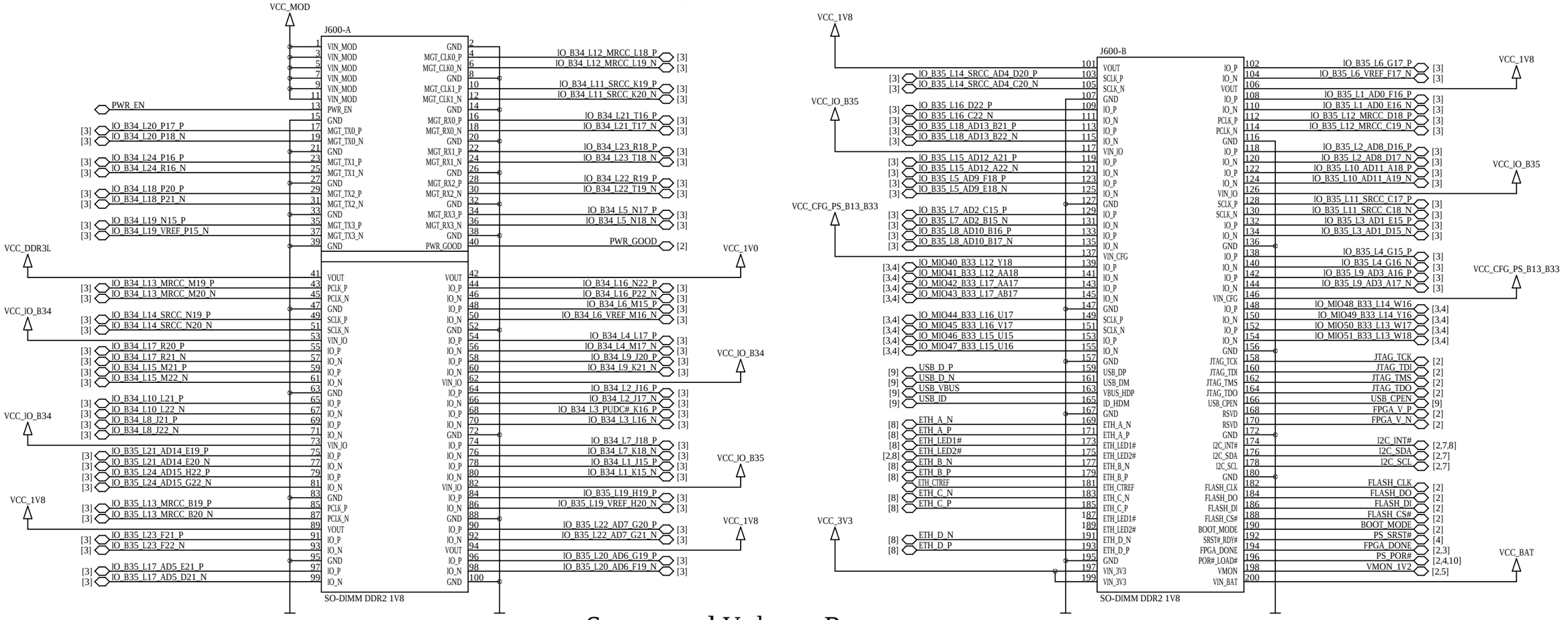

Supported Voltage Ranges

Power Rail	Direction	Range	Tolerance
VCC_MOD	input	3.3V - 5V	±10%
VCC_3V3	input	3.3V	±5%
VCC_IO_B34	input	1.8V - 3.3V	±5%
VCC_IO_B35	input	1.8V - 3.3V	±5%
VCC_CFG_PS_B13_B33	input	1.8V, 2.5V - 3.3V	±5%
VCC_BAT	input	2.0V - 3.6V	-
VCC_1V8	output	1.8V	±5%
VCC_DDR3L	output	1.35V / 1.5V	±5%
VCC_1V0	output	1.0V	±5%

Power rail VCC_IO_B34 can run down to 1.2V when I2C bus access from the PL is not required.

Power rail VCC_IO_B35 can run down to 1.2V but the FPGA LEDs will always be on.

Power rail VCC_CFG_PS_B13_B33 can run at 1.8V but the NAND Flash is not operational.

Real-time Clock

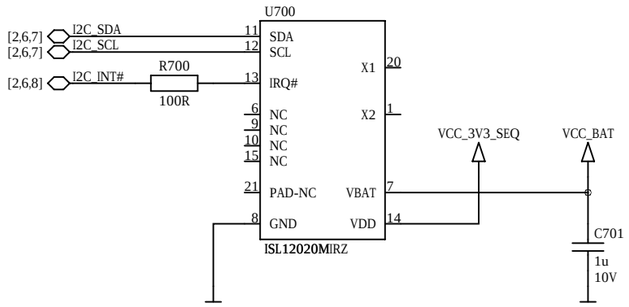

I2C Addresses

RTC registers: 1 1 0 1 1 1 1 Rw

User Ram: 1 0 1 0 1 1 1 Rw

Secure EEPROMs

for Enclustra use only

only one EEPROM can be mounted

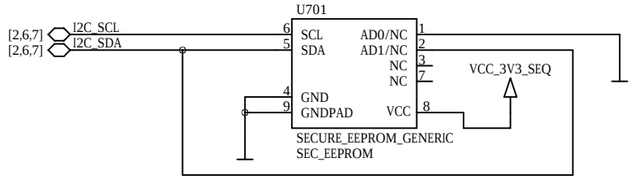

I2C Address: 1 0 1 1 1 0 0 Rw

I2C Address: 1 1 0 0 1 0 0 Rw

Oscillator

only one oscillator can be mounted

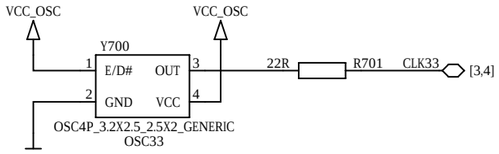

Oscillator Supply Filter

not included in user schematics

This part is intentionally left blank.

Power Decoupling

not included in user schematics

This part is intentionally left blank.

ENCLUSTRA	Copyright	© 2019 by Enclustra GmbH	Sheet Name	7_CLOCK/RTC/EEPROM	Customer No	0000	Revision	R7.0	DNE = do not equip	Confidential
	Company	Enclustra GmbH	Project	Mars ZX3	Project No	429	Designed	MHEI	Date 06 Dec 2019	Sheet/sheets 7 / 15

Gigabit Ethernet PHY

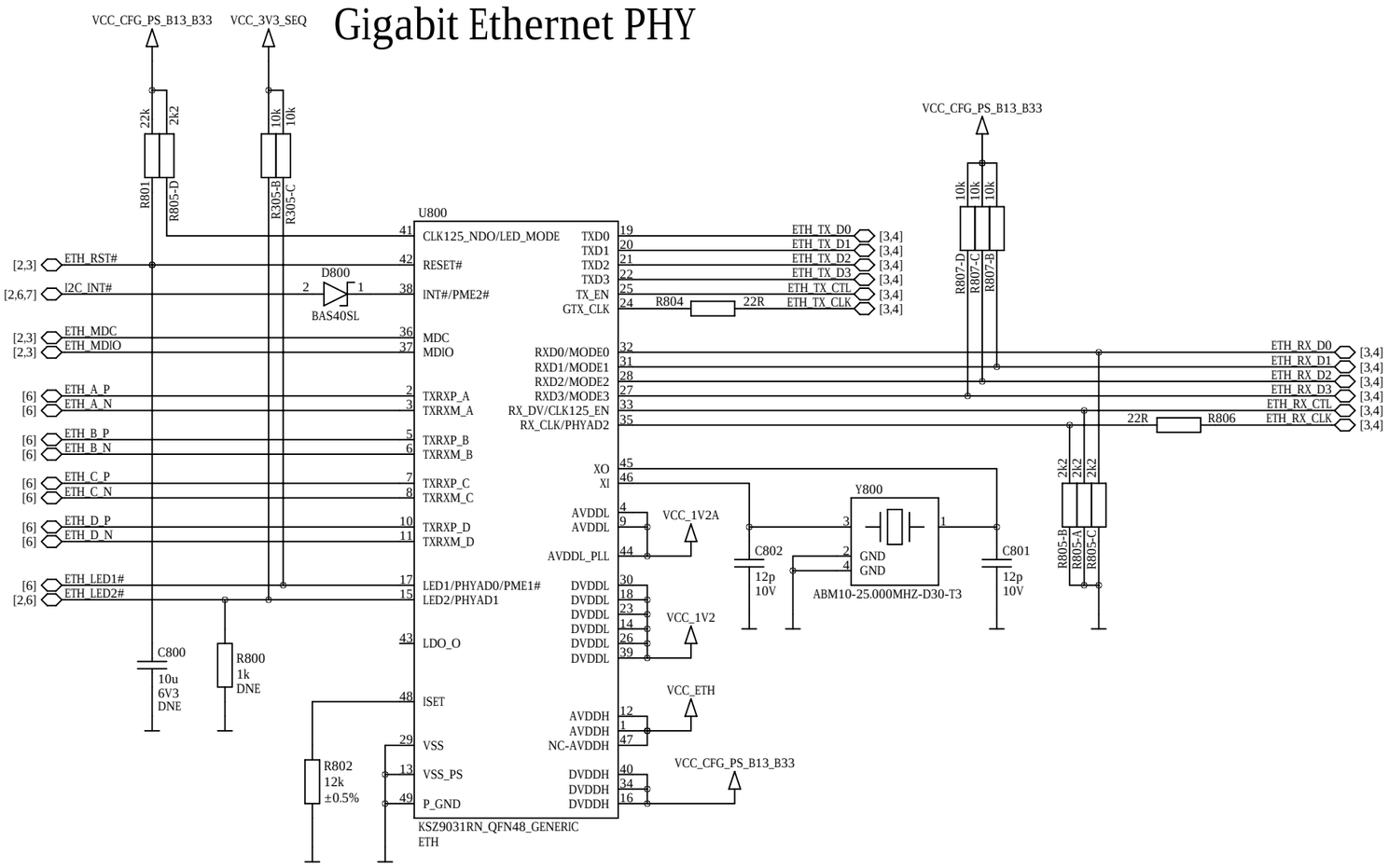

MODE<3:0> = 1110 -> RGMII, all capabilities
LED_Mode Pull up = Single LED
PhyAddress <2:0> = 011 -> 3
LED1 and LED2 are active low

Gigabit Ethernet Power

not included in user schematics

This part is intentionally left blank.

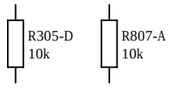

ENCLUSTRA	Copyright	© 2019 by Enclustra GmbH	Sheet Name	8_GIGABIT_ETHERNET_PHY	Customer No	0000	Revision	R7.0	DNE = do not equip	Confidential
	Company	Enclustra GmbH	Project	Mars ZX3	Project No	429	Designed	MHEI	Date 06 Dec 2019	Sheet/sheets 8 / 15

USB 2.0 PHY

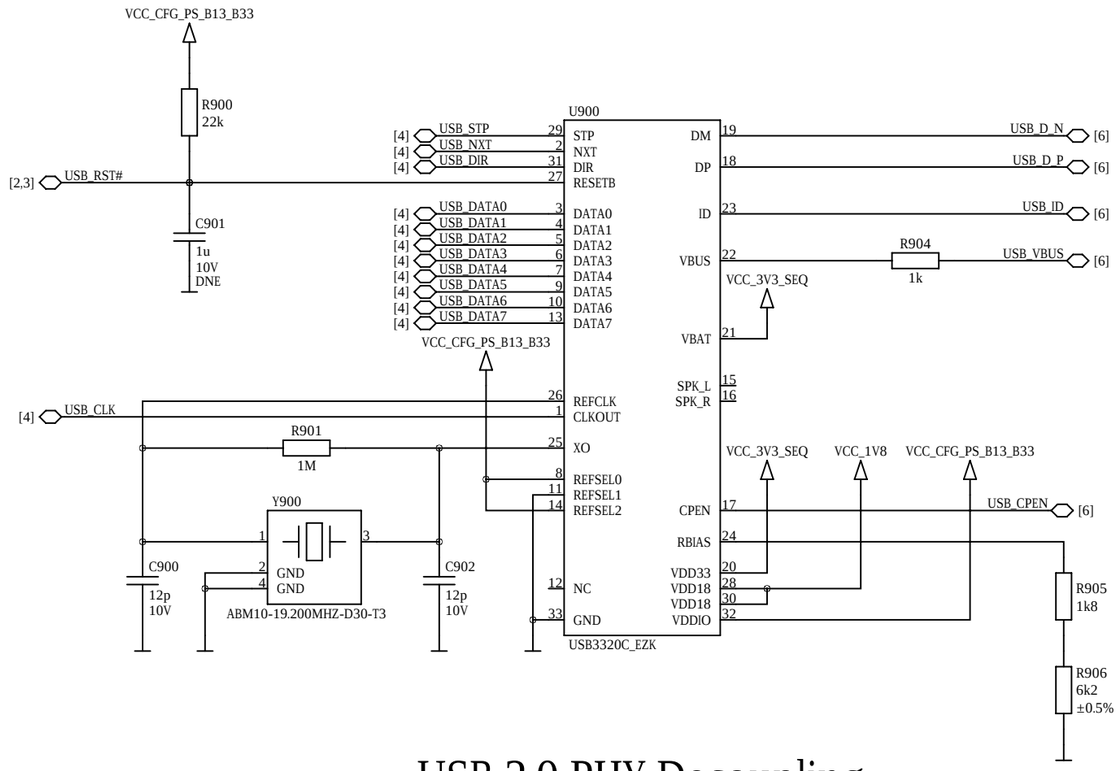

USB 2.0 PHY Decoupling

not included in user schematics

This part is intentionally left blank.

ENCLUSTRA	Copyright © 2019 by Enclustra GmbH	Sheet Name 9_USB_PHY	Customer No 0000	Revision R7.0	DNE = do not equip	Confidential	
	Company Enclustra GmbH	Project Mars ZX3	Project No 429	Designed MHEI	Date 06 Dec 2019	Sheet/sheets 9 / 15	

Quad SPI Flash

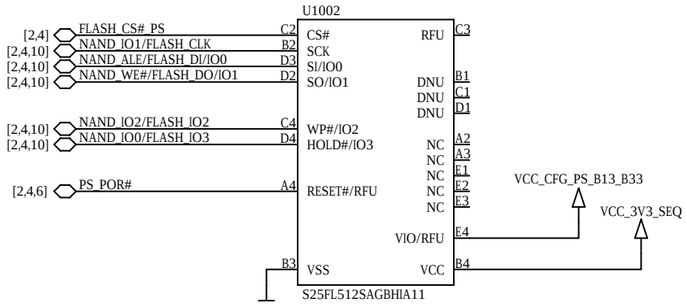

LDO 2.9V 0.2A

not included in user schematics

This part is intentionally left blank.

NAND Flash

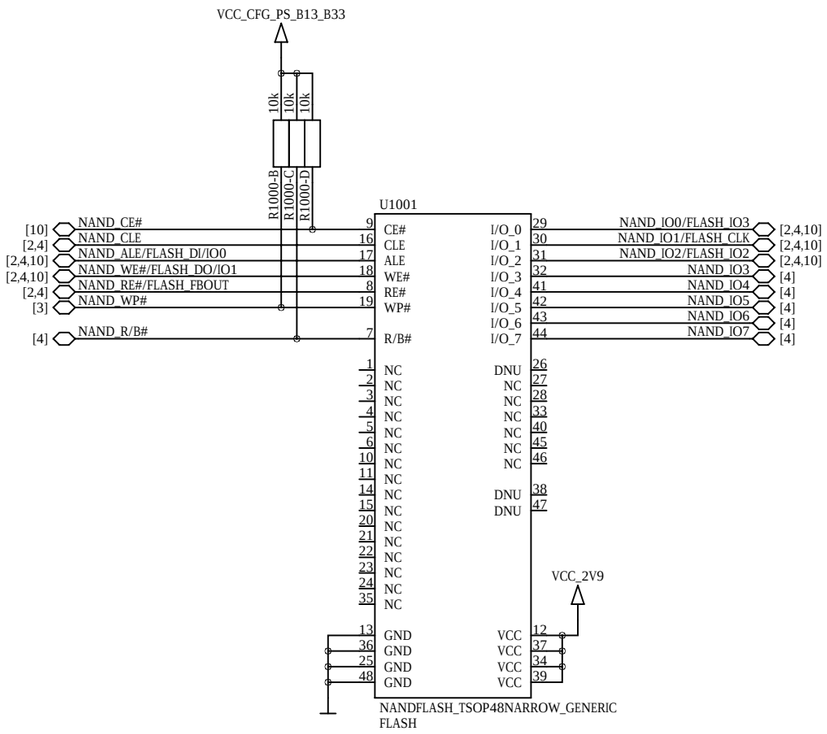

NAND Flash Enable

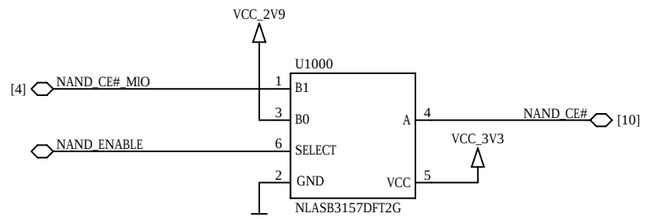

R1000-A
10k

ENCLUSTRA	Copyright © 2019 by Enclustra GmbH	Sheet Name 10_FLASH_MEMORY	Customer No 0000	Revision R7.0	DNE = do not equip	Confidential	
	Company Enclustra GmbH	Project Mars ZX3	Project No 429	Designed MHEI	Date 06 Dec 2019	Sheet/sheets 10 / 15	

DDR3L SDRAM Bytes 0-1

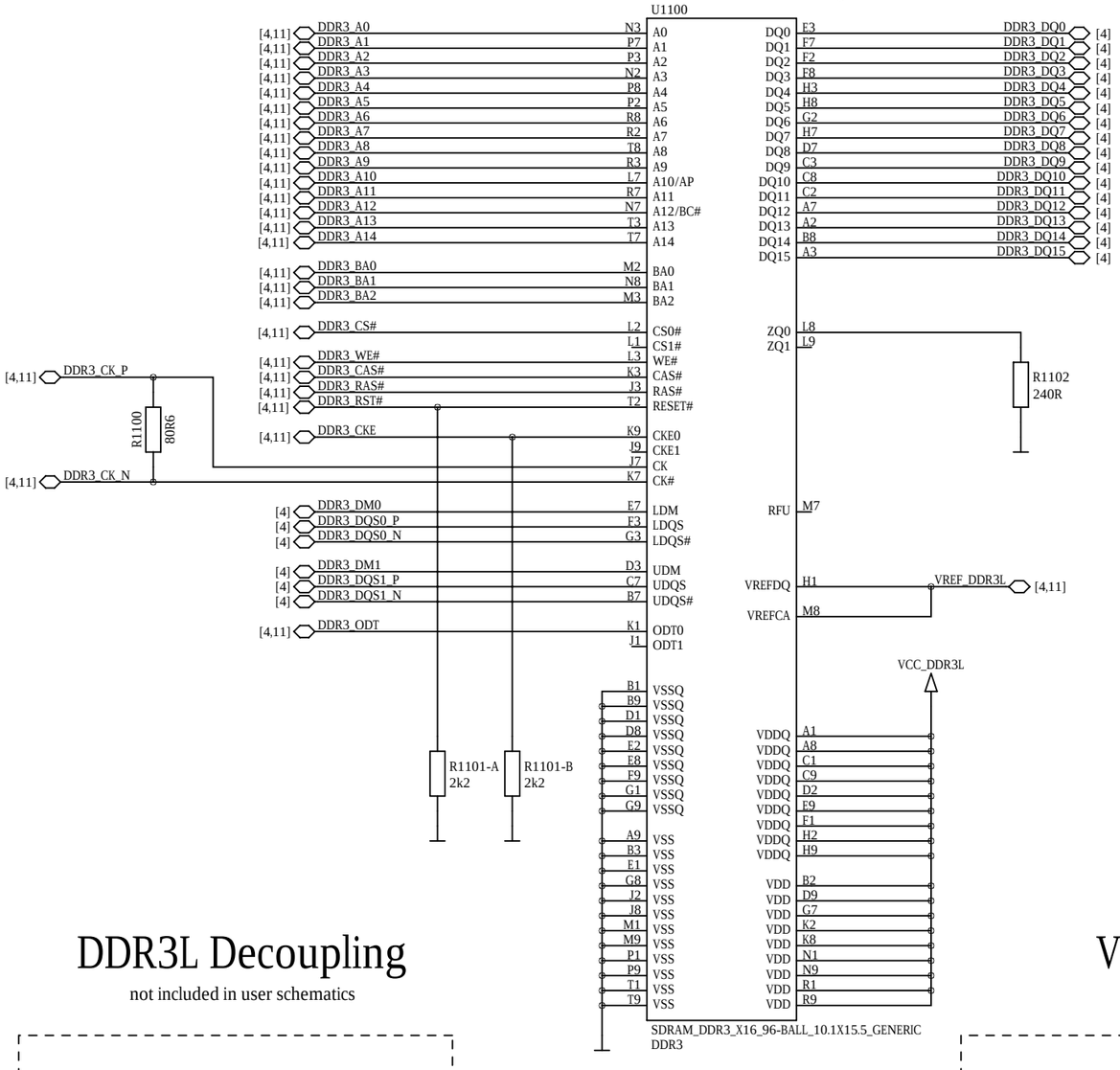

DDR3L SDRAM Bytes 2-3

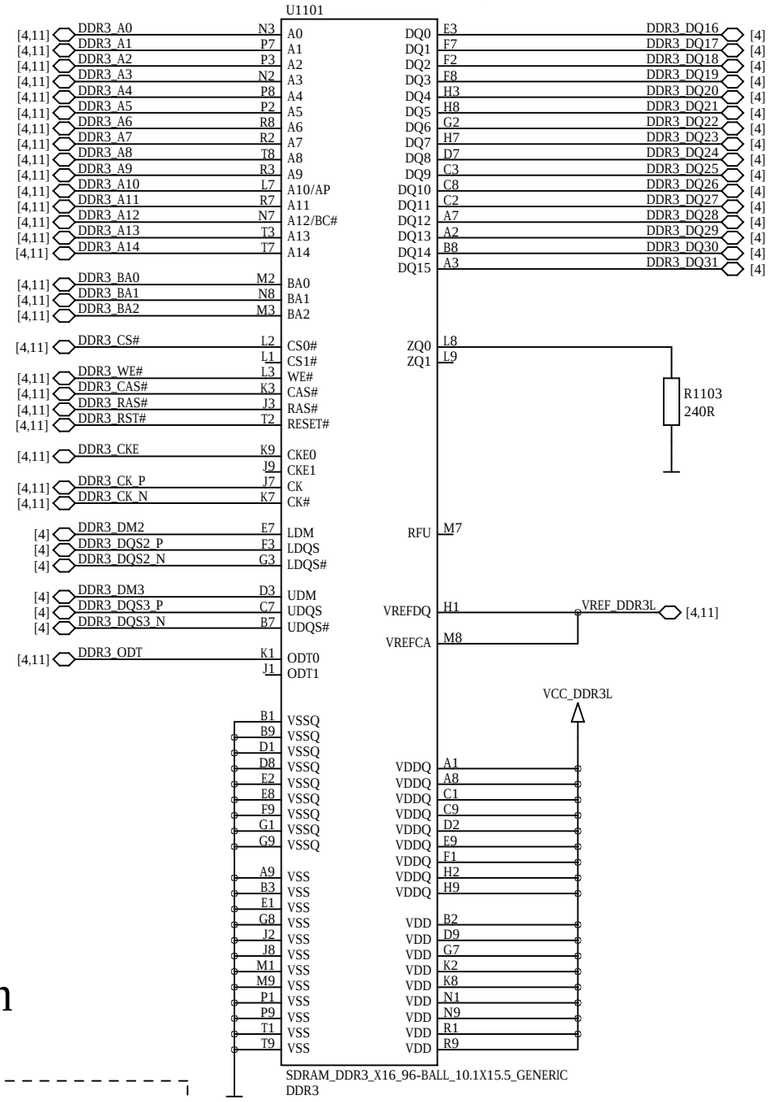

DDR3L Decoupling

not included in user schematics

This part is intentionally left blank.

VREF Generation

not included in user schematics

This part is intentionally left blank.

Dual Step-Down Converter

Channel 1: 1.5/1.35V +-5% 2A (DDR3L)

Channel 2: 1.8V +-5% 2A

not included in user schematics

This part is intentionally left blank.

	DDR3_VSEL	VCC_DDR3L
Default	0 Z (tristate) 1	1.35V 1.5V Invalid

Power Input Filter

not included in user schematics

This part is intentionally left blank.

R1205-D
10k

Step-Down Converter

1.0V +-5% 4A

not included in user schematics

This part is intentionally left blank.

Power Sequencing

not included in user schematics

This part is intentionally left blank.

Mounting Holes

compatible with Mars Heat Sink

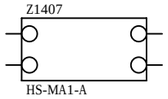

PCB Fiducials

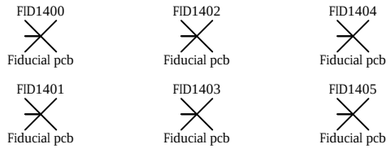

Panel Fiducials

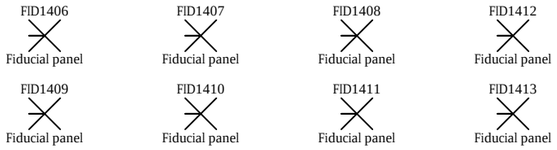

Heatsink

Super-Grip

optional

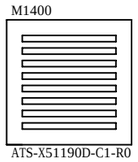

PCB

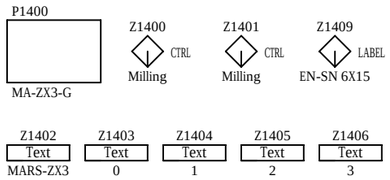

ENCLUSTRA	Copyright © 2019 by Enclustra GmbH	Sheet Name 14_MECHANICS	Customer No 0000	Revision R7.0	DNE = do not equip	Confidential	
	Company Enclustra GmbH	Project Mars ZX3	Project No 429	Designed MHEI	Date 06 Dec 2019	Sheet/sheets 14 / 15	

Component Variants

FPGA	DDR3	Flash	Ethernet PHY	ETH Power	L1U	OSC33	SEC_EEPROM
Part U200A XC7Z020-2CLG484I EN100569 Part U200B XC7Z020-1CLG484C EN100568	Part U1100A:1 K4B4G1646E-BMMA EN102238 Part U1100A:2 H5TC4G63CFR-RDI EN101580 Part U1100A:3 NT5CC256M16ER-EKI EN102239 Part U1100B:1 NT5CC128M16IP-DI EN100912 Part U1100B:2 MT41K128M16JT-125:K EN100255 Part U1101A:1 K4B4G1646E-BMMA EN102238 Part U1101A:2 H5TC4G63CFR-RDI EN101580 Part U1101A:3 NT5CC256M16ER-EKI EN102239 Part U1101B:1 NT5CC128M16IP-DI EN100912 Part U1101B:2 MT41K128M16JT-125:K EN100255	Part U1001A MT29F4G08ABADAWP-IT EN100272 Part U1001B MT29F4G08ABADAWP EN100271 Part U1001C MT29F4G08ABADAWP-ITX EN102209	Part U800A KSZ9031RNXIA EN101934 Part U800B KSZ9031RNXCA EN100202	L800/L801	Part L1200A:1 1u EN100784 Part L1200A:2 1u0 EN101851 Part L1202A:1 1u EN100784 Part L1202A:2 1u0 EN101851	Part Y700A ASDMB_33.333MHZ-LC-T EN100285 Part Y700B ASEMB_33.333MHZ-LC-T EN100914	Part U701A DS28CN01U-A00+ EN100280 Part U701B ATSHA204A-MAHDA-T EN100827

Assembly Variants

Assembly Variant	FPGA	DDR3	Flash	Ethernet PHY	ETH Power	L1U	OSC33	SEC_EEPROM
Variant EN102151:0 MA-ZX3-20-2I-D10-R7	Option EN102151:1 FPGA EN100569	Option EN102151:2 DDR3 EN102238	Option EN102151:3 FLASH EN100272	Option EN102151:4 ETH EN101934	Option EN102151:5 ETH_POWER	Option EN102151:6 L1U EN100784	Option EN102151:7 OSC33 EN100914	Option EN102151:8 SEC_EEPROM EN100280
Variant EN102150:0 MA-ZX3-20-1C-D9-R7	Option EN102150:1 FPGA EN100568	Option EN102150:2 DDR3 EN100912	Option EN102150:3 FLASH EN100272	Option EN102150:4 ETH EN101934	Option EN102150:5 ETH_POWER	Option EN102150:6 L1U EN100784	Option EN102150:7 OSC33 EN100914	Option EN102150:8 SEC_EEPROM EN100280