Enclustra User Schematics

Mercury AA1 Revision 2.0

Disclaimer

User schematics do not include proprietary Enclustra design elements, such as power supply circuits.
These circuits use optimized designs which are extremely compact and remain proprietary to Enclustra.
The user manual provides all necessary information to use the module and its interfaces.

User schematics are provided after purchase of Enclustra hardware, and may also be provided in certain cases before purchase, to assist in product evaluation.
No part of the schematics may be copied or modified without written permission from Enclustra.

Full schematics, including a full bill-of-materials, may be available through the purchase of a hardware licence for the product in question.
Please contact Enclustra Sales for more information.

Note: DNE = Do Not Equip (parts not equipped by default)

© Enclustra GmbH

Mercury+ AA1 SoC Module

Revision 2.0

Sheet 1: Cover
Sheet 2: SoC FPGA Configuration
Sheet 3: SoC FPGA Banks 1C 1D 2A | User LEDs
Sheet 4: SoC FPGA Banks 3A 3B 3C 3D
Sheet 5: SoC FPGA Banks 2J 2K 2L HPS
Sheet 6: SoC FPGA Power
Sheet 7: Power Decoupling
Sheet 8: Module Connectors A B
Sheet 9: Module Connector C
Sheet 10: DDR4 SDRAM Bytes 0 1
Sheet 11: DDR4 SDRAM Bytes 2 3 4 (ECC)
Sheet 12: Oscillators | QSPI Flash | eMMC Flash
Sheet 13: Gigabit Ethernet PHY
Sheet 14: USB 2.0 PHY | Real-time Clock | Secure EEPROM
Sheet 15: USB 3.0 Device Controller
Sheet 16: USB 3.0 Peripherals | Power
Sheet 17: Power 0.9V/0.95V | 3.3V | 5.0V
Sheet 18: Power 1.2V | 1.8V | 2.5V | VTT
Sheet 19: Power 0.9V/1.03V | 1.8V
Sheet 20: Mechanics
Sheet 21: Assembly Variants

Boot Mode Selection

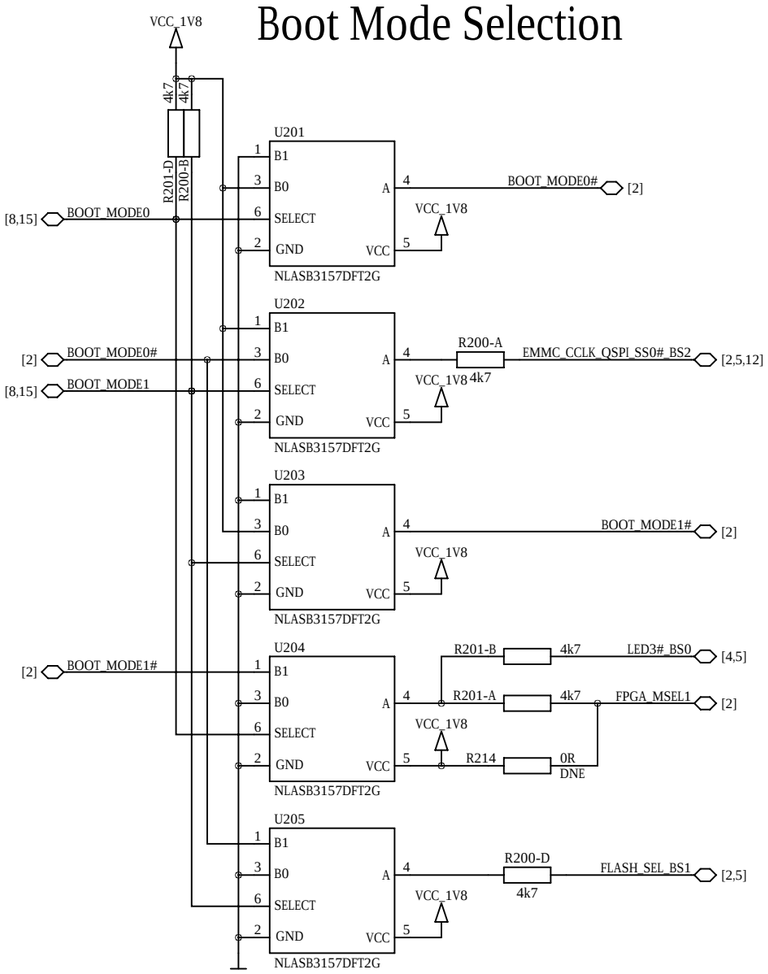

Boot Multiplexers

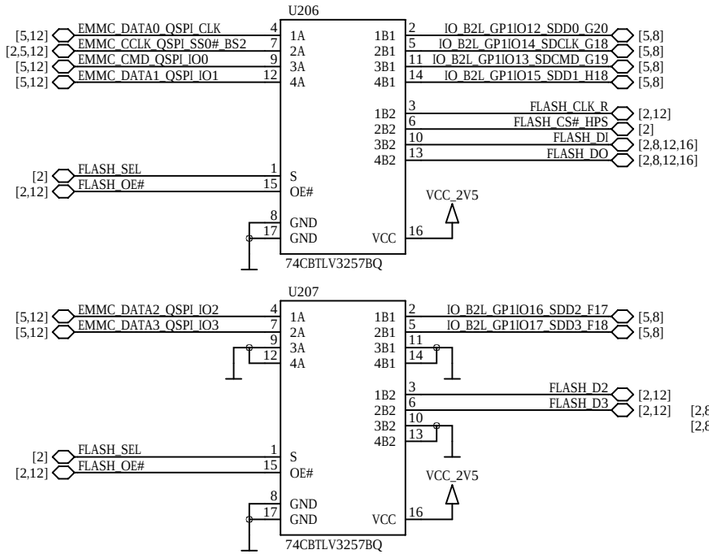

FPGA Configuration

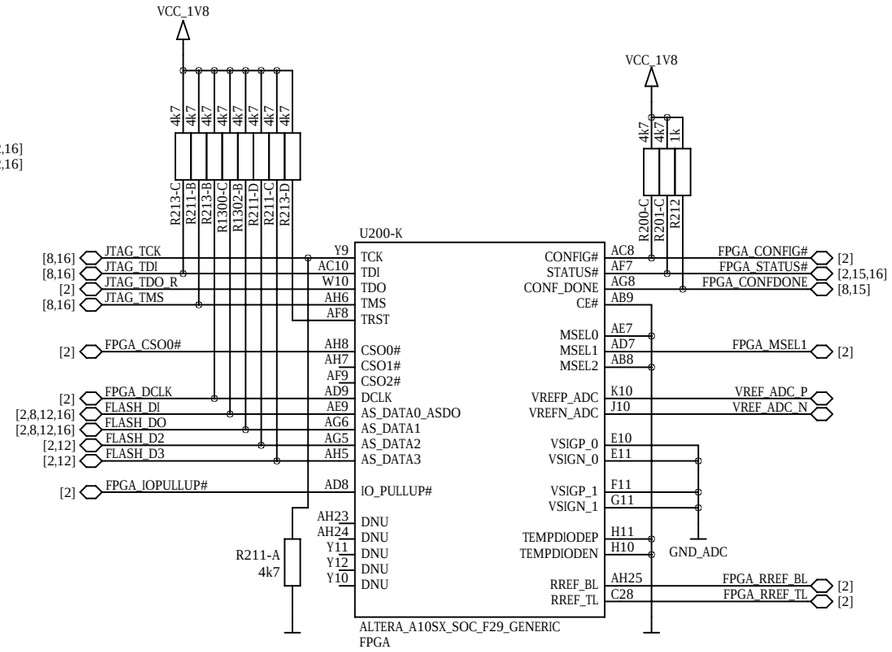

Flash Boot Multiplexer

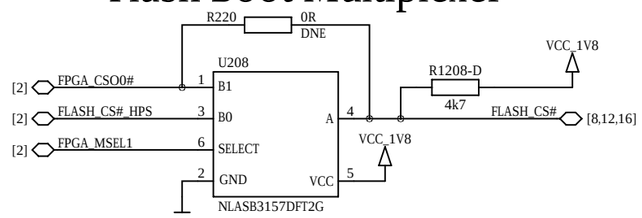

Miscellaneous

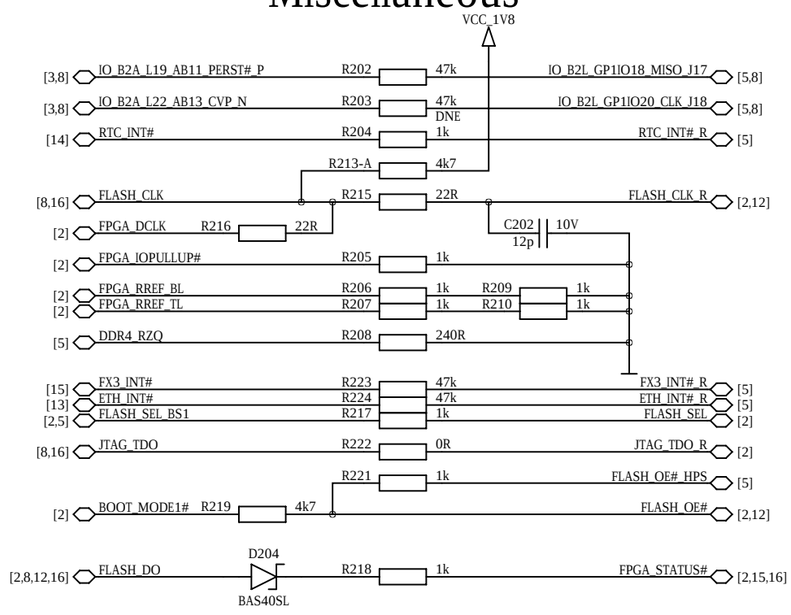

Reset Circuit

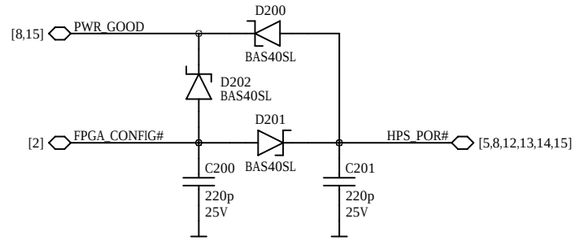

Boot Modes

	Boot Mode		Mode Straps		Configuration	
	1	0	MSEL	BSEL	FPGA Boot	HPS Boot
eMMC Mode	0	0	000	100	HPS or passive serial *)	eMMC
AS Mode not supported	0	1	010	001	QSPI EPCQL required	FPGA
QSPI Mode	1	0	000	110	HPS	QSPI
SD Mode default	1	1	000	100	HPS or passive serial *)	SDIO

*) DATA0 for passive serial configuration is mapped to IO_B2A_L1_AE10_N

FPGA MGT Bank 1C

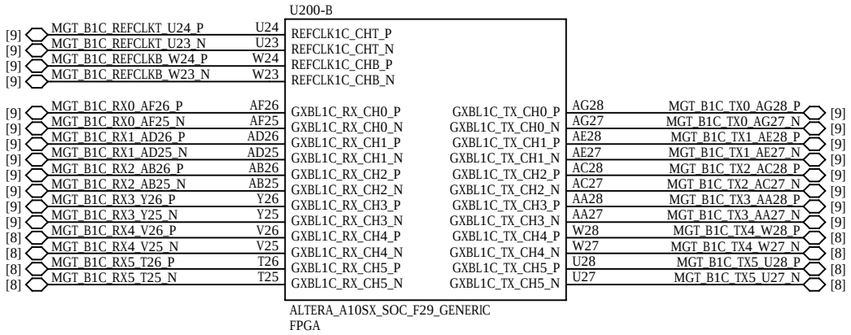

FPGA MGT Bank 1D

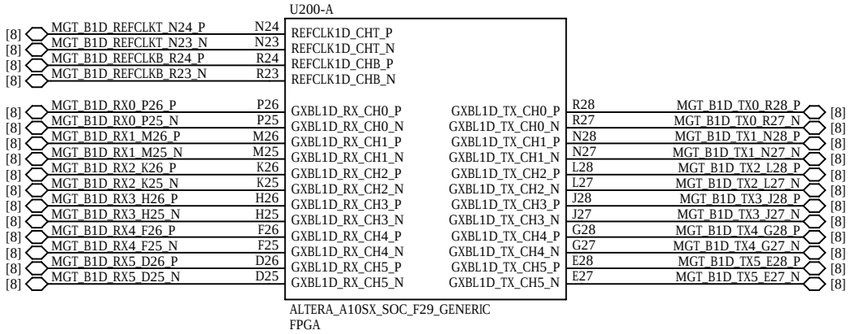

User LEDs

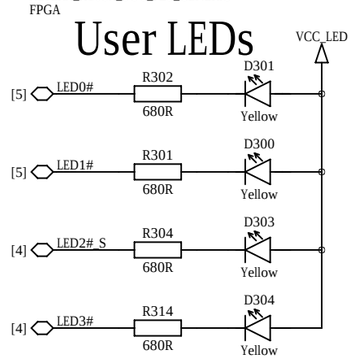

LED Power

not included in user schematics

This part is intentionally left blank.

FPGA Bank 2A

VCCIO = VCC_IO_B2A (max 1.8V)

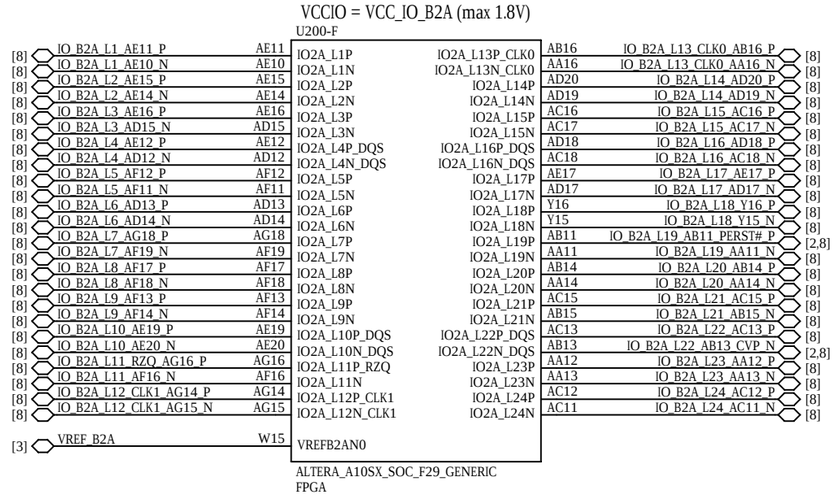

FPGA Reference Voltages

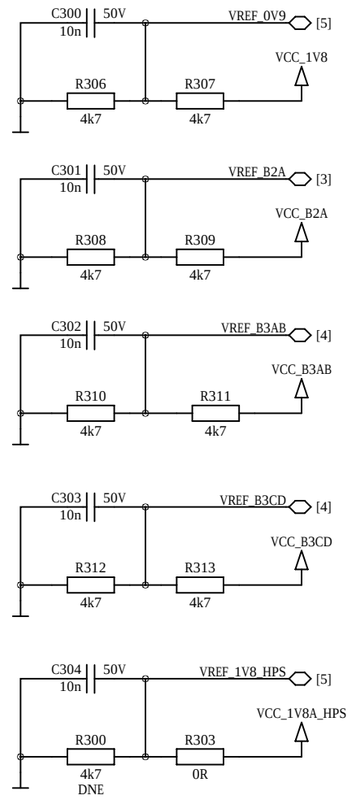

ENCLUSTRA	Copyright	© 2021 by Enclustra GmbH	Sheet Name	03_FPGA_BANK_1C/1D/2A/LEDS	Customer No	0000	Revision	R2.0	DNE = do not equip	Confidential
	Company	Enclustra FPGA Solution Center	Project	Mercury+ AA1	Project No	419	Designed	MHEI	Date 13 Apr 2021	Sheet/sheets 3 / 21

FPGA Bank 3A

VCCIO = VCC_IO_B3AB (max 1.8V)

VCC_IO_B3AB must be 1.8V for USB 3.0 operation.

U200-J

[9]	IO_B3A_L1_W4_P	W4	IO3A_L1P	IO3A_L13P_CLK0	AD3	IO_B3A_L13_CLK0_AD3_P	[9]
[9]	IO_B3A_L1_Y4_N	Y4	IO3A_L1N	IO3A_L13N_CLK0	AC3	IO_B3A_L13_CLK0_AC3_N	[9]
[9]	IO_B3A_L2_W8_P	W8	IO3A_L2P	IO3A_L14P	AE1	IO_B3A_L14_AE1_P	[9]
[9]	IO_B3A_L2_W7_N	W7	IO3A_L2N	IO3A_L14N	AF2	IO_B3A_L14_AF2_N	[9]
[9]	IO_B3A_L3_Y7_P	Y7	IO3A_L3P	IO3A_L15P	AC1	IO_B3A_L15_AC1_P	[9]
[9]	IO_B3A_L3_Y6_N	Y6	IO3A_L3N	IO3A_L15N	AC2	IO_B3A_L15_AC2_N	[9]
[9]	IO_B3A_L4_W5_P	W5	IO3A_L4P_DQS	IO3A_L16P_DQS	AE2	IO_B3A_L16_AE2_P	[9]
[9]	IO_B3A_L4_Y5_N	Y5	IO3A_L4N_DQS	IO3A_L16N_DQS	AD2	IO_B3A_L16_AD2_N	[9]
[9]	IO_B3A_L5_Y1_P	Y1	IO3A_L5P	IO3A_L17P	AG1	IO_B3A_L17_AG1_P	[9]
[9]	IO_B3A_L5_Y2_N	Y2	IO3A_L5N	IO3A_L17N	AF1	IO_B3A_L17_AF1_N	[9]
[9]	IO_B3A_L6_AA9_P	AA9	IO3A_L6P	IO3A_L18P	AG3	IO_B3A_L18_AG3_P	[9]
[9]	IO_B3A_L6_AA8_N	AA8	IO3A_L6N	IO3A_L18N	AF3	IO_B3A_L18_AF3_N	[9]
[9]	IO_B3A_L7_AC5_P	AC5	IO3A_L7P	IO3A_L19P	AH2	IO_B3A_L19_AH2_P	[9]
[9]	IO_B3A_L7_AB4_N	AB4	IO3A_L7N	IO3A_L19N	AH3	IO_B3A_L19_AH3_N	[9]
[9]	IO_B3A_L8_AB1_P	AB1	IO3A_L8P	IO3A_L20P	AE4	IO_B3A_L20_AE4_P	[9]
[9]	IO_B3A_L8_AA1_N	AA1	IO3A_L8N	IO3A_L20N	AD4	IO_B3A_L20_AD4_N	[9]
[9]	IO_B3A_L9_AB6_P	AB6	IO3A_L9P	IO3A_L21P	AC6	IO_B3A_L21_AC6_P	[9]
[9]	IO_B3A_L9_AB5_N	AB5	IO3A_L9N	IO3A_L21N	AC7	IO_B3A_L21_AC7_N	[9]
[9]	IO_B3A_L10_AA2_P	AA2	IO3A_L10P_DQS	IO3A_L22P_DQS	AF6	IO_B3A_L22_AF6_P	[9]
[9]	IO_B3A_L10_AB3_N	AB3	IO3A_L10N_DQS	IO3A_L22N_DQS	AE6	IO_B3A_L22_AE6_N	[9]
[9]	IO_B3A_L11_RZQ_AA3_P	AA3	IO3A_L11P_RZQ	IO3A_L23P	AG4	IO_B3A_L23_AG4_P	[9]
[9]	IO_B3A_L11_AA4_N	AA4	IO3A_L11N	IO3A_L23N	AF4	IO_B3A_L23_AF4_N	[9]
[9]	IO_B3A_L12_CLK1_AA6_P	AA6	IO3A_L12P_CLK1	IO3A_L24P	AE5	IO_B3A_L24_AE5_P	[9]
[9]	IO_B3A_L12_CLK1_AA7_N	AA7	IO3A_L12N_CLK1	IO3A_L24N	AD5	IO_B3A_L24_AD5_N	[9]
[3,4]	VREF_B3AB	W9	VREFB3AN0				

ALTERA_A10SX_SOC_F29_GENERIC
FPGA

FPGA Bank 3C

VCCIO = VCC_IO_B3CD (max 1.8V)

U200-H

[8]	IO_B3C_L1_H6_P	H6	IO3C_L1P	IO3C_L13P_CLK0	G5	IO_B3C_L13_CLK0_G5_P	[8]
[8]	IO_B3C_L1_H7_N	H7	IO3C_L1N	IO3C_L13N_CLK0	G6	IO_B3C_L13_CLK0_G6_N	[8]
[8]	IO_B3C_L2_N7_P	N7	IO3C_L2P	IO3C_L14P	B3	IO_B3C_L14_B3_P	[8]
[8]	IO_B3C_L2_N8_N	N8	IO3C_L2N	IO3C_L14N	C3	IO_B3C_L14_C3_N	[8]
[8]	IO_B3C_L3_L6_P	L6	IO3C_L3P	IO3C_L15P	A4	IO_B3C_L15_A4_P	[8]
[8]	IO_B3C_L3_K6_N	K6	IO3C_L3N	IO3C_L15N	B4	IO_B3C_L15_B4_N	[8]
[8]	IO_B3C_L4_G4_P	G4	IO3C_L4P_DQS	IO3C_L16P_DQS	F4	IO_B3C_L16_F4_P	[8]
[8]	IO_B3C_L4_H5_N	H5	IO3C_L4N_DQS	IO3C_L16N_DQS	E4	IO_B3C_L16_E4_N	[8]
[8]	IO_B3C_L5_K7_P	K7	IO3C_L5P	IO3C_L17P	A2	IO_B3C_L17_A2_P	[8]
[8]	IO_B3C_L5_J7_N	J7	IO3C_L5N	IO3C_L17N	A3	IO_B3C_L17_A3_N	[8]
[8]	IO_B3C_L6_L7_P	L7	IO3C_L6P	IO3C_L18P	D3	IO_B3C_L18_D3_P	[8]
[8]	IO_B3C_L6_M8_N	M8	IO3C_L6N	IO3C_L18N	D4	IO_B3C_L18_D4_N	[8]
[8]	IO_B3C_L7_P9_P	P9	IO3C_L7P	IO3C_L19P	D2	IO_B3C_L19_D2_P	[8]
[8]	IO_B3C_L7_P8_N	P8	IO3C_L7N	IO3C_L19N	C2	IO_B3C_L19_C2_N	[8]
[8]	IO_B3C_L8_N6_P	N6	IO3C_L8P	IO3C_L20P	F2	IO_B3C_L20_F2_P	[8]
[8]	IO_B3C_L8_P7_N	P7	IO3C_L8N	IO3C_L20N	E2	IO_B3C_L20_E2_N	[8]
[8]	IO_B3C_L9_R6_P	R6	IO3C_L9P	IO3C_L21P	G3	IO_B3C_L21_G3_P	[8]
[8]	IO_B3C_L9_R7_N	R7	IO3C_L9N	IO3C_L21N	F3	IO_B3C_L21_F3_N	[8]
[8]	IO_B3C_L10_K5_P	K5	IO3C_L10P_DQS	IO3C_L22P_DQS	H3	IO_B3C_L22_H3_P	[8]
[8]	IO_B3C_L10_J5_N	J5	IO3C_L10N_DQS	IO3C_L22N_DQS	J4	IO_B3C_L22_J4_N	[8]
[8]	IO_B3C_L11_RZQ_M5_P	M5	IO3C_L11P_RZQ	IO3C_L23P	C1	IO_B3C_L23_C1_P	[8]
[8]	IO_B3C_L11_M6_N	M6	IO3C_L11N	IO3C_L23N	B1	IO_B3C_L23_B1_N	[8]
[8]	IO_B3C_L12_CLK1_N5_P	N5	IO3C_L12P_CLK1	IO3C_L24P	F1	IO_B3C_L24_F1_P	[8]
[8]	IO_B3C_L12_CLK1_P5_N	P5	IO3C_L12N_CLK1	IO3C_L24N	E1	IO_B3C_L24_E1_N	[8]
[3,4]	VREF_B3CD	R9	VREFB3CN0				

ALTERA_A10SX_SOC_F29_GENERIC
FPGA

FPGA Bank 3B

VCCIO = VCC_IO_B3AB (max 1.8V)

VCC_IO_B3AB must be 1.8V for USB 3.0 operation.

U200-I

[9,15]	FX3_DQ15_B3B_L1_P3_P	P3	IO3B_L1P	IO3B_L13P_CLK0	N1	FX3_DQ31_B3B_L13_CLK0_N1_P	[9,15]
[9,15]	FX3_PKTEND#_B3B_L1_P4_N	P4	IO3B_L1N	IO3B_L13N_CLK0	M1	FX3_DQ24_B3B_L13_CLK0_M1_N	[9,15]
[4]	LED2#	T8	IO3B_L2P	IO3B_L14P	H1	FX3_DQ10_B3B_L14_H1_P	[9,15]
[4]	FX3_SLOE#	T9	IO3B_L2N	IO3B_L14N	G1	FX3_DQ11_B3B_L14_G1_N	[9,15]
[9,15]	FX3_A1_B3B_L3_T6_P	T6	IO3B_L3P	IO3B_L15P	R2	FX3_FLAGA_B3B_L15_R2_P	[9,15]
[9,15]	FX3_GPIO27_B3B_L3_T7_N	T7	IO3B_L3N	IO3B_L15N	P2	FX3_SLRD#_B3B_L15_P2_N	[9,15]
[9,15]	FX3_DQ5_B3B_L4_R4_P	R4	IO3B_L4P_DQS	IO3B_L16P_DQS	T2	FX3_SLWR#_B3B_L16_T2_P	[9,15]
[9,15]	FX3_DQ2_B3B_L4_R5_N	R5	IO3B_L4N_DQS	IO3B_L16N_DQS	T3	FX3_GPIO23_B3B_L16_T3_N	[9,15]
[9,15]	FX3_GPIO25_B3B_L5_T4_P	T4	IO3B_L5P	IO3B_L17P	L1	FX3_DQ4_B3B_L17_L1_P	[9,15]
[9,15]	FX3_A0_B3B_L5_U5_N	U5	IO3B_L5N	IO3B_L17N	K1	FX3_DQ7_B3B_L17_K1_N	[9,15]
[4]	FX3_CLK	U8	IO3B_L6P	IO3B_L18P	T1	FX3_FLAGB_B3B_L18_T1_P	[9,15]
[4]	FX3_RESET#_PL	V8	IO3B_L6N	IO3B_L18N	R1	FX3_GPIO26_B3B_L18_R1_N	[9,15]
[9,15]	FX3_DQ9_B3B_L7_M3_P	M3	IO3B_L7P	IO3B_L19P	U3	FX3_DQ17_B3B_L19_U3_P	[9,15]
[9,15]	FX3_DQ13_B3B_L7_M4_N	M4	IO3B_L7N	IO3B_L19N	U4	FX3_DQ20_B3B_L19_U4_N	[9,15]
[9,15]	FX3_DQ0_B3B_L8_K4_P	K4	IO3B_L8P	IO3B_L20P	V1	FX3_DQ23_B3B_L20_V1_P	[9,15]
[9,15]	FX3_DQ1_B3B_L8_L4_N	L4	IO3B_L8N	IO3B_L20N	U1	FX3_DQ22_B3B_L20_U1_N	[9,15]
[9,15]	FX3_DQ14_B3B_L9_N2_P	N2	IO3B_L9P	IO3B_L21P	U6	FX3_DQ27_B3B_L21_U6_P	[9,15]
[9,15]	FX3_SLCS#_B3B_L9_N3_N	N3	IO3B_L9N	IO3B_L21N	V7	FX3_DQ26_B3B_L21_V7_N	[9,15]
[9,15]	FX3_DQ8_B3B_L10_H2_P	H2	IO3B_L10P_DQS	IO3B_L22P_DQS	V5	FX3_DQ25_B3B_L22_V5_P	[9,15]
[9,15]	FX3_DQ12_B3B_L10_J3_N	J3	IO3B_L10N_DQS	IO3B_L22N_DQS	V6	FX3_DQ29_B3B_L22_V6_N	[9,15]
[9,15]	FX3_DQ3_B3B_L11_RZQ_K2_P	K2	IO3B_L11P_RZQ	IO3B_L23P	W2	FX3_DQ21_B3B_L23_W2_P	[9,15]
[9,15]	FX3_DQ6_B3B_L11_J2_N	J2	IO3B_L11N	IO3B_L23N	V2	FX3_DQ18_B3B_L23_V2_N	[9,15]
[9,15]	FX3_DQ30_B3B_L12_CLK1_L2_P	L2	IO3B_L12P_CLK1	IO3B_L24P	W3	FX3_DQ19_B3B_L24_W3_P	[9,15]
[9,15]	FX3_DQ28_B3B_L12_CLK1_L3_N	L3	IO3B_L12N_CLK1	IO3B_L24N	V3	FX3_DQ16_B3B_L24_V3_N	[9,15]
[3,4]	VREF_B3AB	U9	VREFB3BN0				

ALTERA_A10SX_SOC_F29_GENERIC
FPGA

FPGA Bank 3D

VCCIO = VCC_IO_B3CD (max 1.8V)

U200-G

[8]	IO_B3D_L7_K9_P	K9	IO3D_L7P	IO3D_L13P_CLK0	C7	IO_B3D_L13_CLK0_C7_P	[8]
[8]	IO_B3D_L7_J9_N	J9	IO3D_L7N	IO3D_L13N_CLK0	D7	IO_B3D_L13_CLK0_D7_N	[8]
[8]	IO_B3D_L8_F9_P	F9	IO3D_L8P	IO3D_L14P	A6	IO_B3D_L14_A6_P	[8]
[8]	IO_B3D_L8_G9_N	G9	IO3D_L8N	IO3D_L14N	A7	IO_B3D_L14_A7_N	[8]
[8]	IO_B3D_L9_L9_P	L9	IO3D_L9P	IO3D_L15P	E6	IO_B3D_L15_E6_P	[8]
[8]	IO_B3D_L9_L8_N	L8	IO3D_L9N	IO3D_L15N	E7	IO_B3D_L15_E7_N	[8]
[8]	IO_B3D_L10_H8_P	H8	IO3D_L10P_DQS	IO3D_L16P_DQS	C5	IO_B3D_L16_C5_P	[8]
[8]	IO_B3D_L10_J8_N	J8	IO3D_L10N_DQS	IO3D_L16N_DQS	C6	IO_B3D_L16_C6_N	[8]
[8]	IO_B3D_L11_RZQ_F6_P	F6	IO3D_L11P_RZQ	IO3D_L17P	B5	IO_B3D_L17_B5_P	[8]
[8]	IO_B3D_L11_F7_N	F7	IO3D_L11N	IO3D_L17N	B6	IO_B3D_L17_B6_N	[8]
[8]	IO_B3D_L12_CLK1_G8_P	G8	IO3D_L12P_CLK1	IO3D_L18P	D5	IO_B3D_L18_D5_P	[8]
[8]	IO_B3D_L12_CLK1_F8_N	F8	IO3D_L12N_CLK1	IO3D_L18N	E5	IO_B3D_L18_E5_N	[8]
[3,4]	VREF_B3CD	M9	VREFB3DN0				

ALTERA_A10SX_SOC_F29_GENERIC
FPGA

FX3 Control Signal Routing

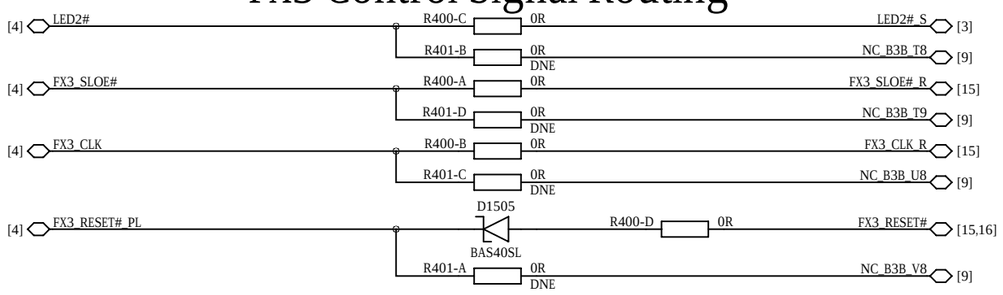

LED 3 Driver

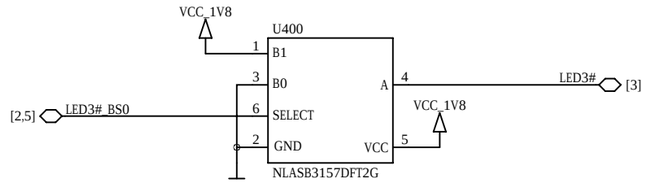

FPGA Bank 2J

VCCIO = VCC_1V2

U200-E

[11]	DDR4_DQ20	AG10	IO2J_L1P	IO2J_L13P_CLK0	AC20	DDR4_DQ9 [10]
[11]	DDR4_DM2	AG9	IO2J_L1N	IO2J_L13N_CLK0	AB20	DDR4_DM1 [10]
[11]	DDR4_DQ21	AH18	IO2J_L2P	IO2J_L14P	AH21	DDR4_DQ14 [10]
[11]	DDR4_DQ16	AH17	IO2J_L2N	IO2J_L14N	AH20	DDR4_DQ10 [10]
[11]	DDR4_DQ23	AH16	IO2J_L3P	IO2J_L15P	AC21	DDR4_DQ15 [10]
[11]	DDR4_DQ19	AH15	IO2J_L3N	IO2J_L15N	AB21	DDR4_DQ13 [10]
[11]	DDR4_DQS2_P	AH11	IO2J_L4P_DQS	IO2J_L16P_DQS	AF21	DDR4_DQS1_P [10]
[11]	DDR4_DQS2_N	AH10	IO2J_L4N_DQS	IO2J_L16N_DQS	AE21	DDR4_DQS1_N [10]
[11]	DDR4_DQ17	AH12	IO2J_L5P	IO2J_L17P	AH22	DDR4_DQ11 [10]
[11]	DDR4_DQ18	AG11	IO2J_L5N	IO2J_L17N	AG21	DDR4_DQ8 [10]
[2]	RTC_INT#_R	AH13	IO2J_L6P	IO2J_L18P	AG19	ETH_INT#_R [2]
[11]	DDR4_DQ22	AG13	IO2J_L6N	IO2J_L18N	AG20	DDR4_DQ12 [10]
[11]	DDR4_DQ26	AA21	IO2J_L7P	IO2J_L19P	AG23	DDR4_DQ4 [10]
[11]	DDR4_DM3	Y21	IO2J_L7N	IO2J_L19N	AF23	DDR4_DM0 [10]
[11]	DDR4_DQ24	W20	IO2J_L8P	IO2J_L20P	AE23	DDR4_DQ6 [10]
[11]	DDR4_DQ28	W21	IO2J_L8N	IO2J_L20N	AD23	DDR4_DQ1 [10]
[11]	DDR4_DQ29	AB18	IO2J_L9P	IO2J_L21P	AA23	DDR4_DQ7 [10]
[11]	DDR4_DQ31	AB19	IO2J_L9N	IO2J_L21N	AA22	DDR4_DQ5 [10]
[11]	DDR4_DQS3_P	AA17	IO2J_L10P_DQS	IO2J_L22P_DQS	AC23	DDR4_DQS0_P [10]
[11]	DDR4_DQS3_N	Y17	IO2J_L10N_DQS	IO2J_L22N_DQS	AB23	DDR4_DQS0_N [10]
[11]	DDR4_DQ30	Y20	IO2J_L11P_RZQ	IO2J_L23P	AF22	DDR4_DQ0 [10]
[11]	DDR4_DQ27	Y19	IO2J_L11N	IO2J_L23N	AE22	DDR4_DQ2 [10]
[12]	I2C_INT#_HPS	AA18	IO2J_L12P_CLK1	IO2J_L24P	AD22	DDR4_ALERT# [10,11]
[11]	DDR4_DQ25	AA19	IO2J_L12N_CLK1	IO2J_L24N	AC22	DDR4_DQ3 [10]
[5,10,11]	VREF_0V6	W17	VREFB2JN0			

ALTERA_A10SX_SOC_F29_GENERIC
FPGA

HPS Dedicated Boot Pins

VCCIO = VCC_1V8

VCC_1V8

4k7 R500, 4k7 R501

U200-L

[12]	HPS_CLK1		G14	HPS_CLK1			
[2,8,12,13,14,15]	HPS_POR#		K11	HPS_NPOR			
[8]	HPS_RST#		K12	HPS_NRST			
[2,12]	EMMC_DATA0_QSPI_CLK	R503 22R	F12	IOHPS_GP2IO0	IOHPS_GP2IO6_BOOTSEL1	G13	FLASH_SEL_BS1 [2]
[2,12]	EMMC_CMD_QSPI_IO0		G16	IOHPS_GP2IO1	IOHPS_GP2IO7_BOOTSEL0	J15	LED3#_BS0 [2,4]
[2,12]	EMMC_CCLK_QSPI_SS0#_BS2	R504 22R	D12	IOHPS_GP2IO2_BOOTSEL2	IOHPS_GP2IO8	H15	EMMC_DATA4 [12]
[2,12]	EMMC_DATA1_QSPI_IO1		J12	IOHPS_GP2IO3	IOHPS_GP2IO9	F16	EMMC_DATA5 [12]
[2,12]	EMMC_DATA2_QSPI_IO2		H12	IOHPS_GP2IO4	IOHPS_GP2IO10	E12	EMMC_DATA6 [12]
[2,12]	EMMC_DATA3_QSPI_IO3		F14	IOHPS_GP2IO5	IOHPS_GP2IO11	G15	EMMC_DATA7 [12]
[3]	VREF_1V8_HPS		J13	VCCIOREF_HPS	IOHPS_GP2IO12	K15	IOHPS_GP2IO12_UARTTX_K15 [8]
					IOHPS_GP2IO13	F13	IOHPS_GP2IO13_UARTRX_F13 [8]

ALTERA_A10SX_SOC_F29_GENERIC
FPGA

FPGA Bank 2K

VCCIO = VCC_1V2

U200-D

[11]	DDR4_DQ32	B9	IO2K_L1P	IO2K_L13P_CLK0	A24	DDR4_A10 [10,11]
[11]	DDR4_DM4	B8	IO2K_L1N	IO2K_L13N_CLK0	A23	DDR4_A11 [10,11]
[11]	DDR4_DQ36	B10	IO2K_L2P	IO2K_L14P	B21	DDR4_A8 [10,11]
[11]	DDR4_DQ39	C10	IO2K_L2N	IO2K_L14N	C21	DDR4_A9 [10,11]
[11]	DDR4_DQ37	C12	IO2K_L3P	IO2K_L15P	B24	DDR4_A6 [10,11]
[11]	DDR4_DQ35	C11	IO2K_L3N	IO2K_L15N	B23	DDR4_A7 [10,11]
[11]	DDR4_DQS4_P	A9	IO2K_L4P_DQS	IO2K_L16P_DQS	A27	DDR4_A4 [10,11]
[11]	DDR4_DQS4_N	A8	IO2K_L4N_DQS	IO2K_L16N_DQS	A26	DDR4_A5 [10,11]
[11]	DDR4_DQ38	C8	IO2K_L5P	IO2K_L17P	A21	DDR4_A2 [10,11]
[11]	DDR4_DQ33	D8	IO2K_L5N	IO2K_L17N	A22	DDR4_A3 [10,11]
[2]	FX3_INT#_R	D9	IO2K_L6P	IO2K_L18P	B26	DDR4_A0 [10,11]
[11]	DDR4_DQ34	D10	IO2K_L6N	IO2K_L18N	B25	DDR4_A1 [10,11]
[10,11]	DDR4_BA1	A17	IO2K_L7P	IO2K_L19P	D14	DDR4_CS1#_C1 [10,11]
[10,11]	DDR4_BG0	A16	IO2K_L7N	IO2K_L19N	E14	DDR4_PAR [10,11]
[10,11]	DDR4_A17	A19	IO2K_L8P	IO2K_L20P	C13	DDR4_CK_P [10,11]
[10,11]	DDR4_BA0	A18	IO2K_L8N	IO2K_L20N	D13	DDR4_CK_N [10,11]
[10,11]	DDR4_A15	B16	IO2K_L9P	IO2K_L21P	B14	DDR4_CKE0 [10,11]
[10,11]	DDR4_A16	C15	IO2K_L9N	IO2K_L21N	B15	DDR4_CKE1_C0 [10,11]
[10,11]	DDR4_A13	B19	IO2K_L10P_DQS	IO2K_L22P_DQS	A14	DDR4_ODT0 [10,11]
[10,11]	DDR4_A14	B18	IO2K_L10N_DQS	IO2K_L22N_DQS	B13	DDR4_ODT1_C2 [10,11]
[2]	DDR4_RZQ	B20	IO2K_L11P_RZQ	IO2K_L23P	A12	DDR4_CS0# [10,11]
[10,11]	DDR4_A12	C20	IO2K_L11N	IO2K_L23N	A13	DDR4_ACT# [10,11]
[12]	CLK_PLL	D15	IO2K_L12P_CLK1	IO2K_L24P	A11	DDR4_BG1 [10,11]
	PWR_MGT_VSEL	E15	IO2K_L12N_CLK1	IO2K_L24N	B11	DDR4_RESET# [10]
[5,10,11]	VREF_0V6	E9	VREFB2KN0			

ALTERA_A10SX_SOC_F29_GENERIC
FPGA

FPGA Bank 2L

VCCIO = VCC_1V8

U200-C

[14]	USB_CLK		C18	IO2L_GP0IO0	IO2L_GP1IO0_CLK1	F23	IO_B2L_GP1IO0_CLK1_F23 [8]
[14]	USB_STP		D17	IO2L_GP0IO1	IO2L_GP1IO1	G23	IO_B2L_GP1IO1_G23 [8]
[14]	USB_DIR		C17	IO2L_GP0IO2	IO2L_GP1IO2_RZQ	F21	LED0# [3]
[14]	USB_D0		C16	IO2L_GP0IO3	IO2L_GP1IO3	G21	LED1# [3]
[14]	USB_D1		D20	IO2L_GP0IO4	IO2L_GP1IO4	C23	PWR_INT_VSEL
[14]	USB_NXT		E20	IO2L_GP0IO5	IO2L_GP1IO5	C22	FLASH_OE#_HPS [2]
[14]	USB_D2		E19	IO2L_GP0IO6	IO2L_GP1IO6	E22	I2C_SDA_LS [12,15]
[14]	USB_D3		F19	IO2L_GP0IO7	IO2L_GP1IO7	F22	I2C_SCL_LS [12,15]
[14]	USB_D4		E16	IO2L_GP0IO8	IO2L_GP1IO8	D23	IO_B2L_GP1IO8_D23 [8]
[14]	USB_D5		E17	IO2L_GP0IO9	IO2L_GP1IO9	E23	IO_B2L_GP1IO9_E23 [8]
[14]	USB_D6		D19	IO2L_GP0IO10	IO2L_GP1IO10	D22	ETH_MDIO [13]
[14]	USB_D7		D18	IO2L_GP0IO11	IO2L_GP1IO11	E21	ETH_MDC [13]
[13]	ETH_TXCLK	R505 22R	K23	IO2L_GP0IO12	IO2L_GP1IO12	G20	IO_B2L_GP1IO12_SDD0_G20 [2,8]
[13]	ETH_TXCTL		K22	IO2L_GP0IO13	IO2L_GP1IO13	G19	IO_B2L_GP1IO13_SDCMD_G19 [2,8]
[13]	ETH_RXCLK	R506 22R	K19	IO2L_GP0IO14	IO2L_GP1IO14	G18	IO_B2L_GP1IO14_SDCLK_G18 [2,8]
[13]	ETH_RXCTL		K20	IO2L_GP0IO15	IO2L_GP1IO15	H18	IO_B2L_GP1IO15_SDD1_H18 [2,8]
[13]	ETH_TXD0		H20	IO2L_GP0IO16	IO2L_GP1IO16	F17	IO_B2L_GP1IO16_SDD2_F17 [2,8]
[13]	ETH_TXD1		H21	IO2L_GP0IO17	IO2L_GP1IO17	F18	IO_B2L_GP1IO17_SDD3_F18 [2,8]
[13]	ETH_RXD0		J22	IO2L_GP0IO18	IO2L_GP1IO18	J17	IO_B2L_GP1IO18_MISO_J17 [2,8]
[13]	ETH_RXD1		H22	IO2L_GP0IO19	IO2L_GP1IO19	K17	IO_B2L_GP1IO19_SS0#_K17 [8]
[13]	ETH_TXD2		J20	IO2L_GP0IO20	IO2L_GP1IO20	J18	IO_B2L_GP1IO20_CLK_J18 [2,8]
[13]	ETH_TXD3		K21	IO2L_GP0IO21	IO2L_GP1IO21	J19	IO_B2L_GP1IO21_MOSI_J19 [8]
[13]	ETH_RXD2		J23	IO2L_GP0IO22_CLK0	IO2L_GP1IO22	H17	IO_B2L_GP1IO22_H17 [8]
[13]	ETH_RXD3		H23	IO2L_GP0IO23	IO2L_GP1IO23	H16	IO_B2L_GP1IO23_H16 [8]
[3]	VREF_0V9		K16	VREFB2LN0			

ALTERA_A10SX_SOC_F29_GENERIC
FPGA

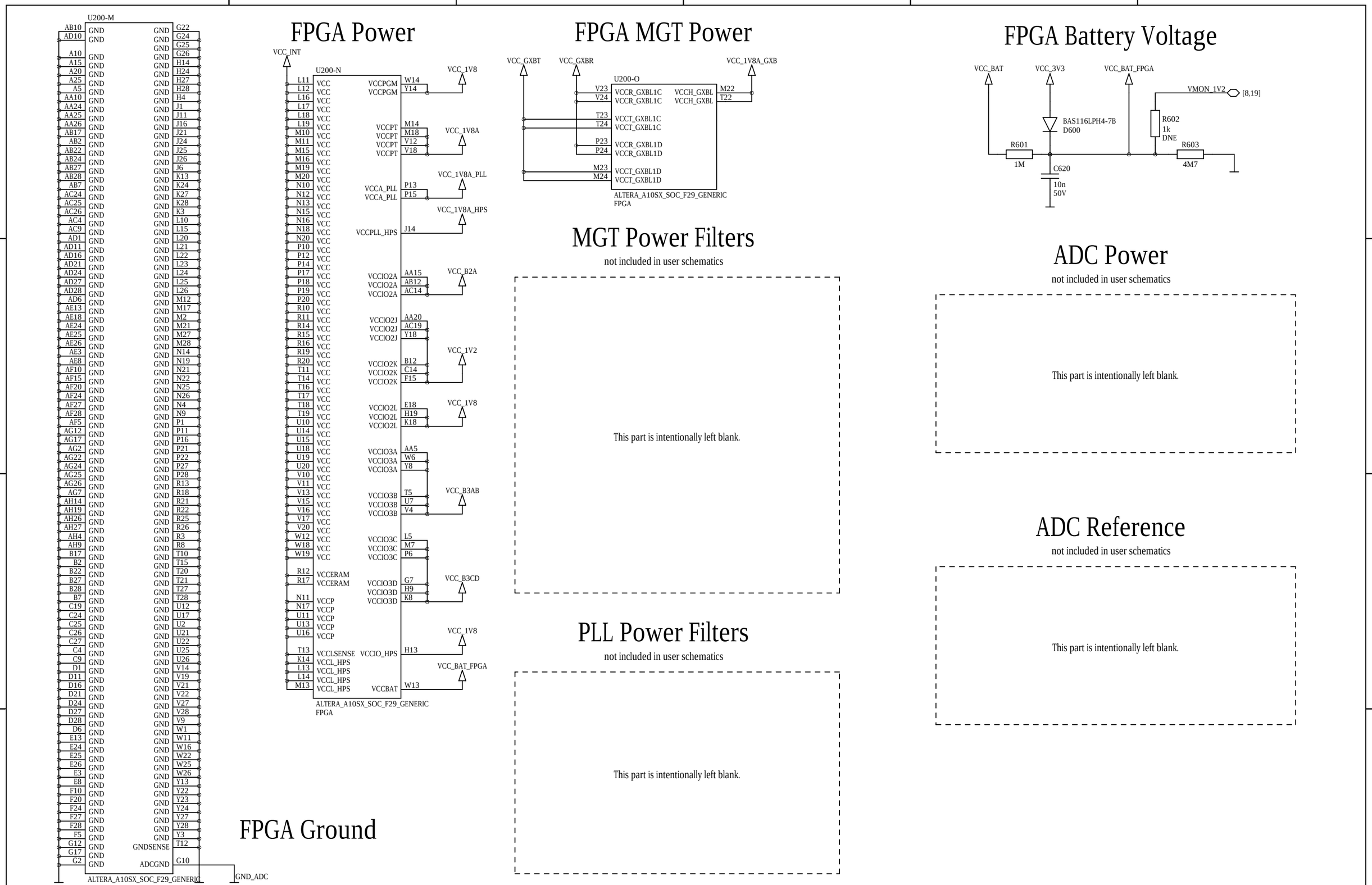

ENCLUSTRA	Copyright © 2021 by Enclustra GmbH	Sheet Name 06_FPGA_POWER	Customer No 0000	Revision R2.0	DNE = do not equip	Confidential
	Company Enclustra FPGA Solution Center	Project Mercury+ AA1	Project No 419	Designed MHEI	Date 13 Apr 2021	Sheet/sheets 6 / 21

FPGA Decoupling

not included in user schematics

This part is intentionally left blank.

Power Decoupling

not included in user schematics

This part is intentionally left blank.

Module Connector A

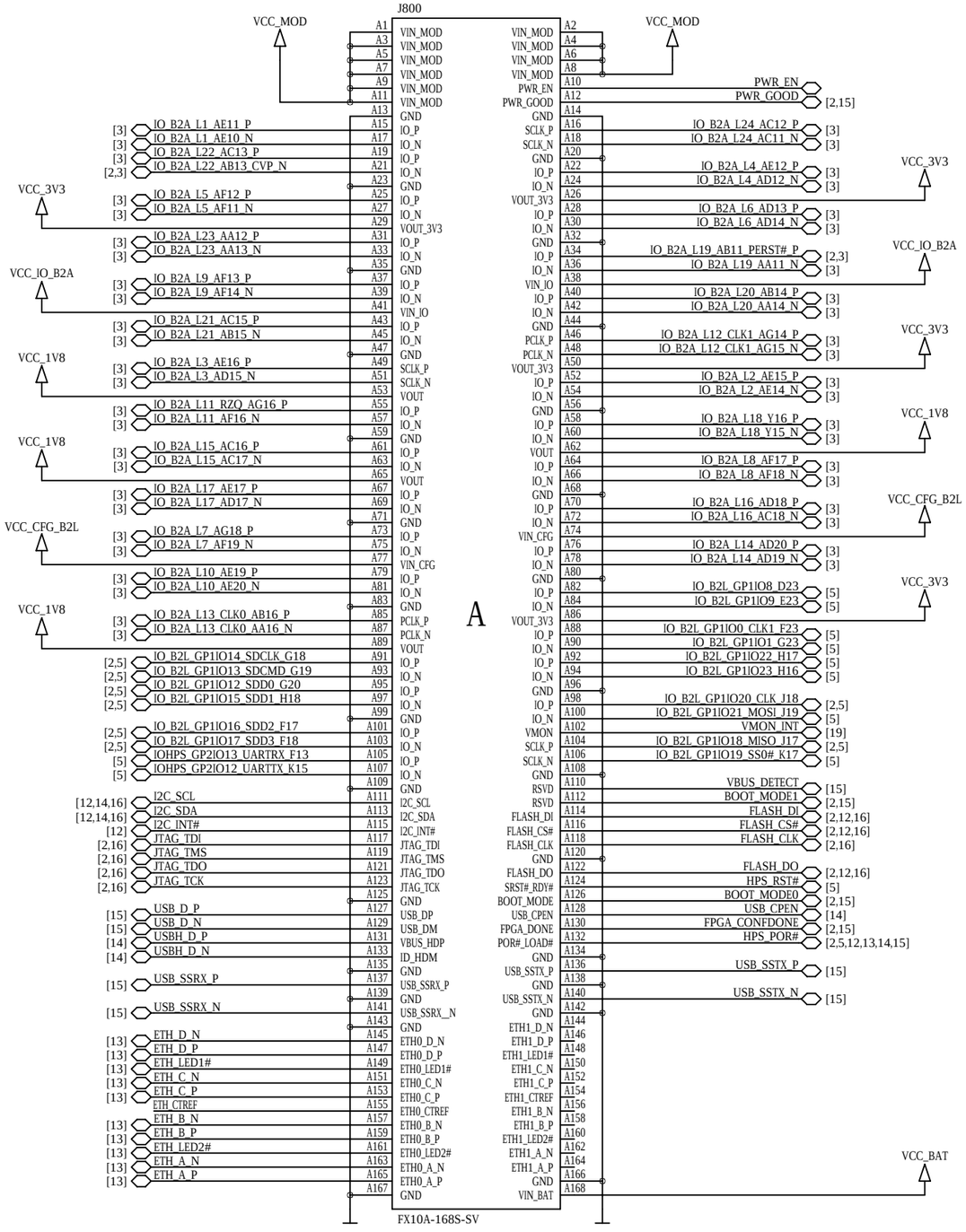

Module Connector B

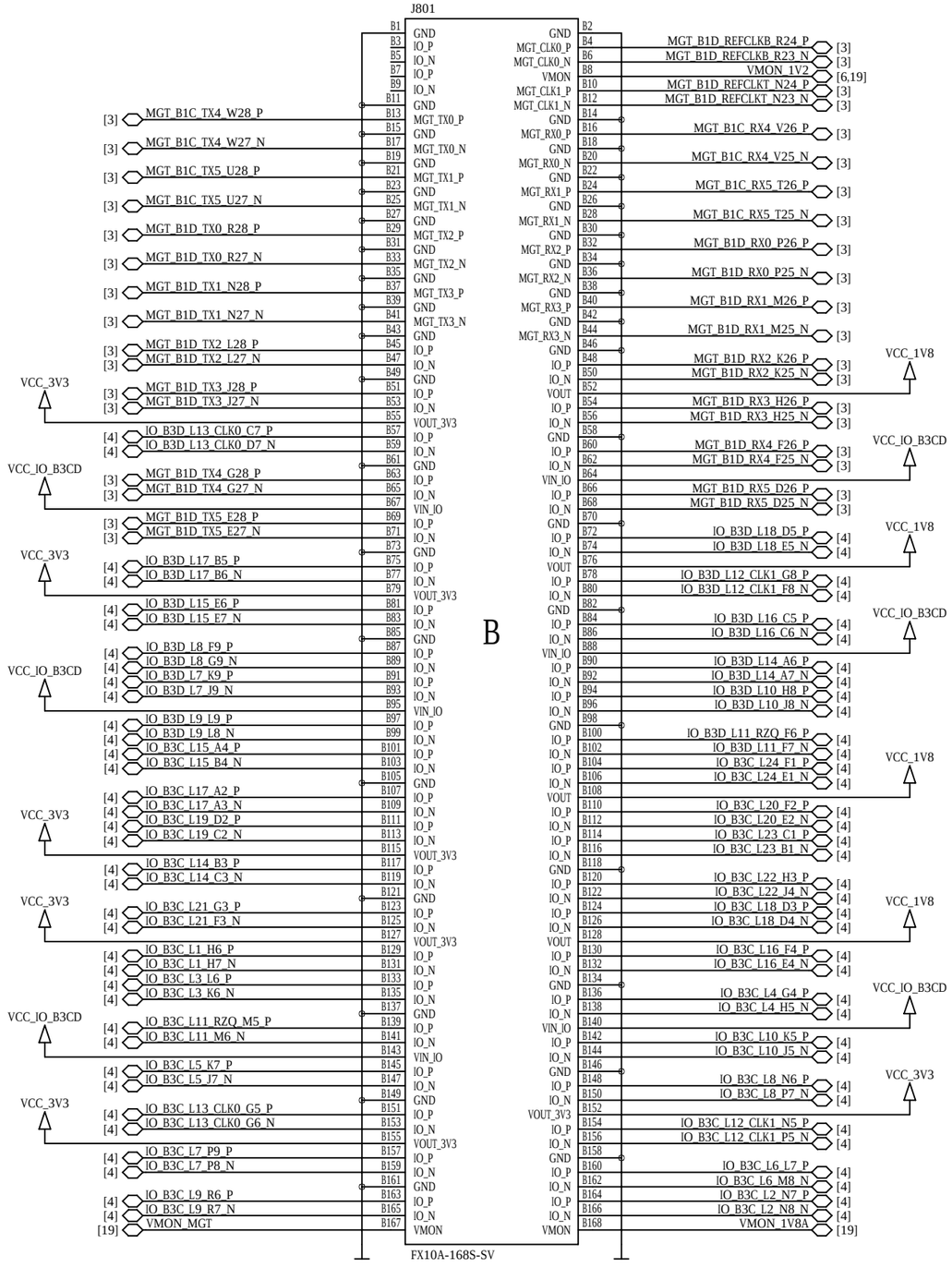

ENCLUSTRA	Copyright © 2021 by Enclustra GmbH	Sheet Name 08_MODULE_CONNECTORS_A/B	Customer No 0000	Revision R2.0	DNE = do not equip	Confidential
	Company Enclustra FPGA Solution Center	Project Mercury+ AA1	Project No 419	Designed MHEI	Date 13 Apr 2021	Sheet/sheets 8 / 21

Module Connector C

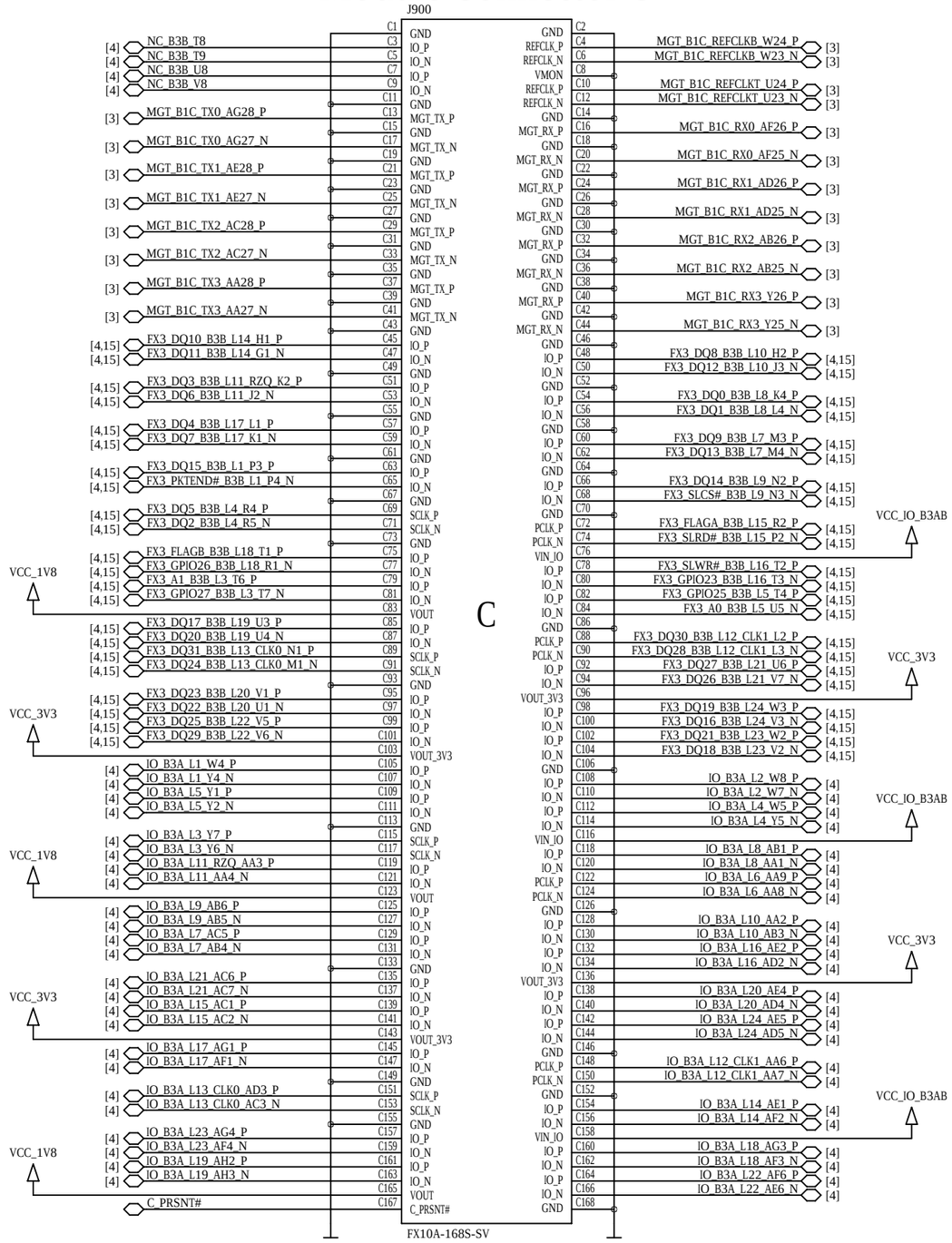

Base board design rules

FX3 signals must be left unconneced when using USB3.

VCC_IO_B3AB must be connected to VCC_1V8 when using USB3.

Alternatively, the C connector should not be populated.

ENCLUSTRA	Copyright	© 2021 by Enclustra GmbH	Sheet Name	09_MODULE_CONNECTOR_C	Customer No 0000	Revision R2.0	DNE = do not equip	Confidential
	Company	Enclustra FPGA Solution Center	Project	Mercury+ AA1	Project No 419	Designed MHEI	Date 13 Apr 2021	Sheet/sheets 9 / 21

DDR4 SDRAM

Byte 0

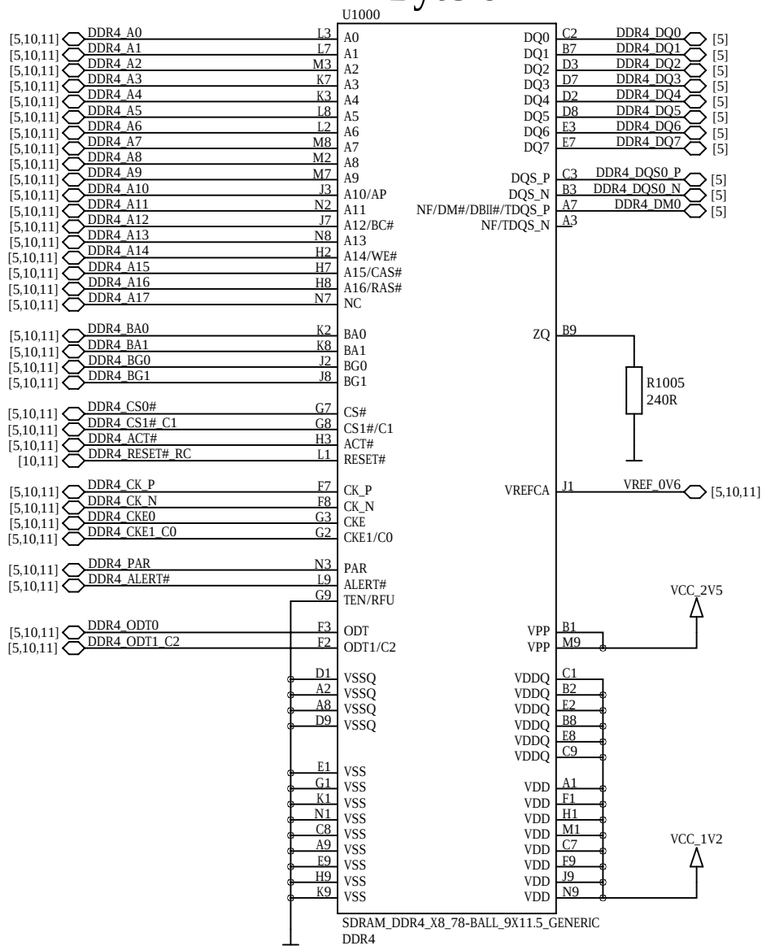

Byte 1

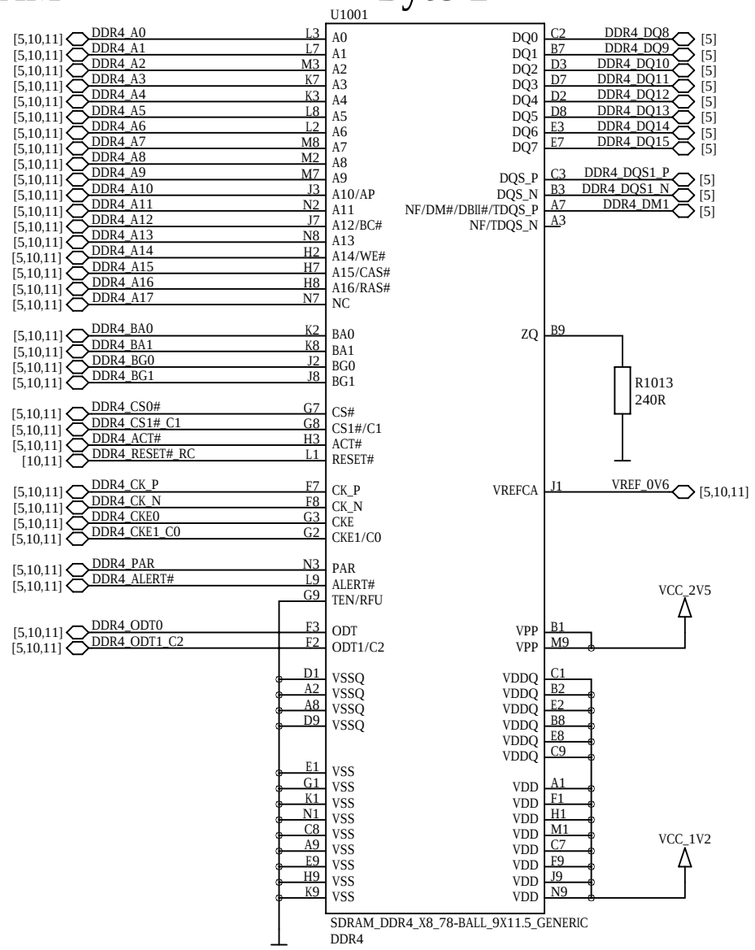

DDR4 Termination

not included in user schematics

This part is intentionally left blank.

DDR4 Miscellaneous

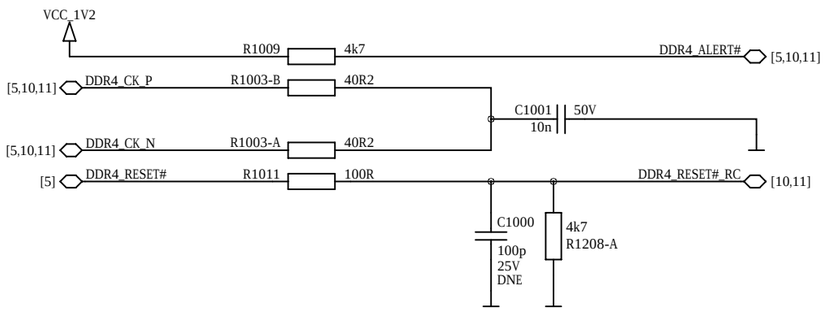

ENCLUSTRA	Copyright	© 2021 by Enclustra GmbH	Sheet Name	10_DDR4_SDRAM_0/1	Customer No	0000	Revision	R2.0	DNE = do not equip	Confidential
	Company	Enclustra FPGA Solution Center	Project	Mercury+ AA1	Project No	419	Designed	MHEI	Date 13 Apr 2021	Sheet/sheets 10 / 21

DDR4 SDRAM

Byte 2

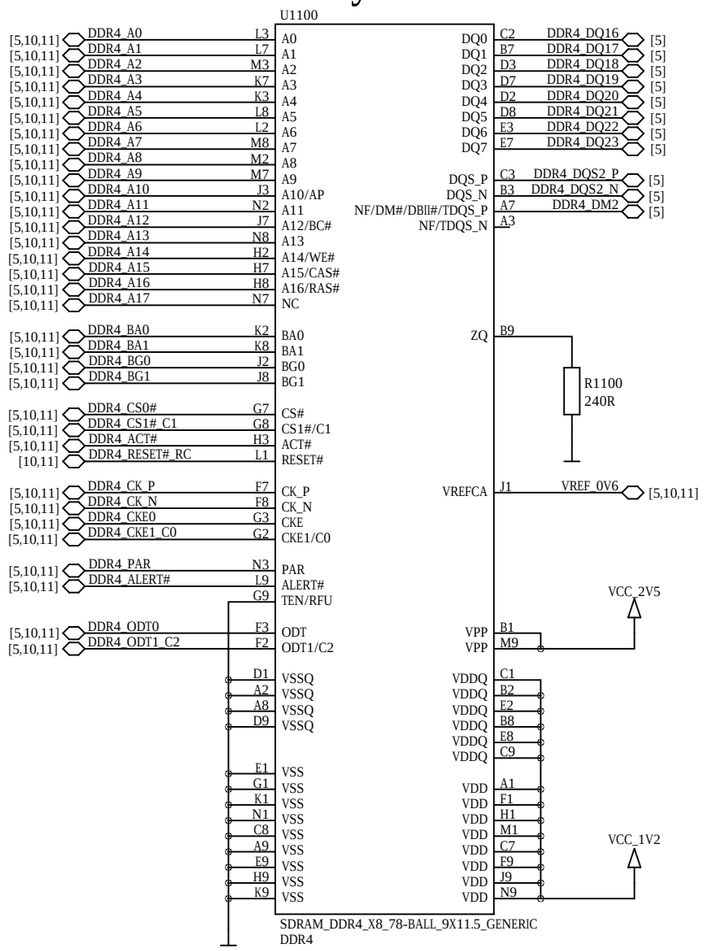

Byte 3

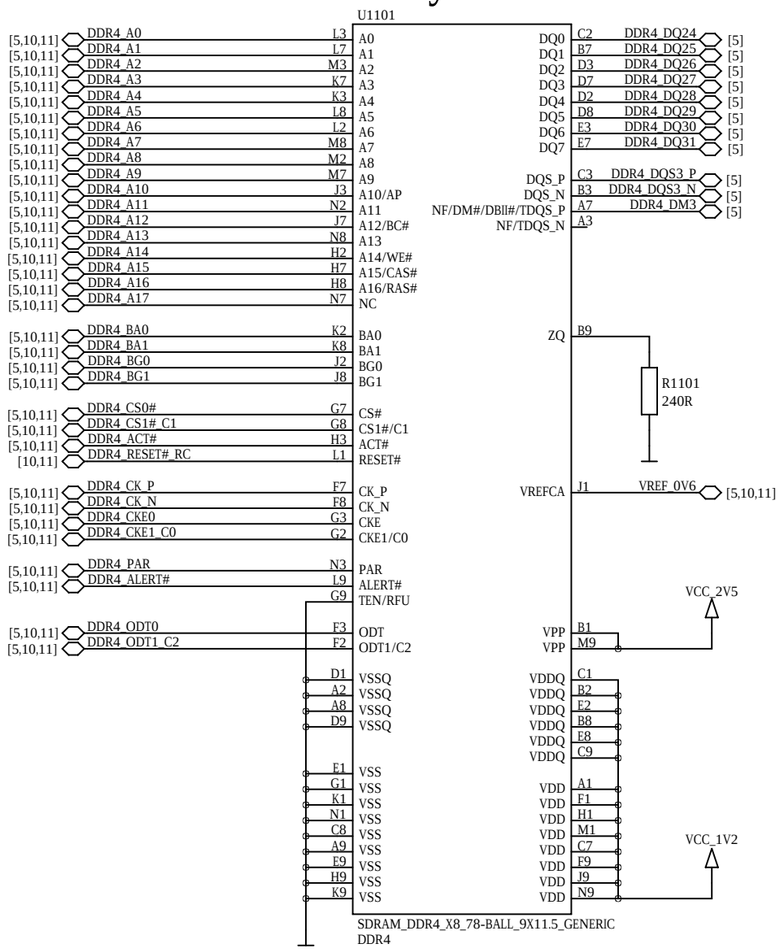

Byte 4 (ECC)

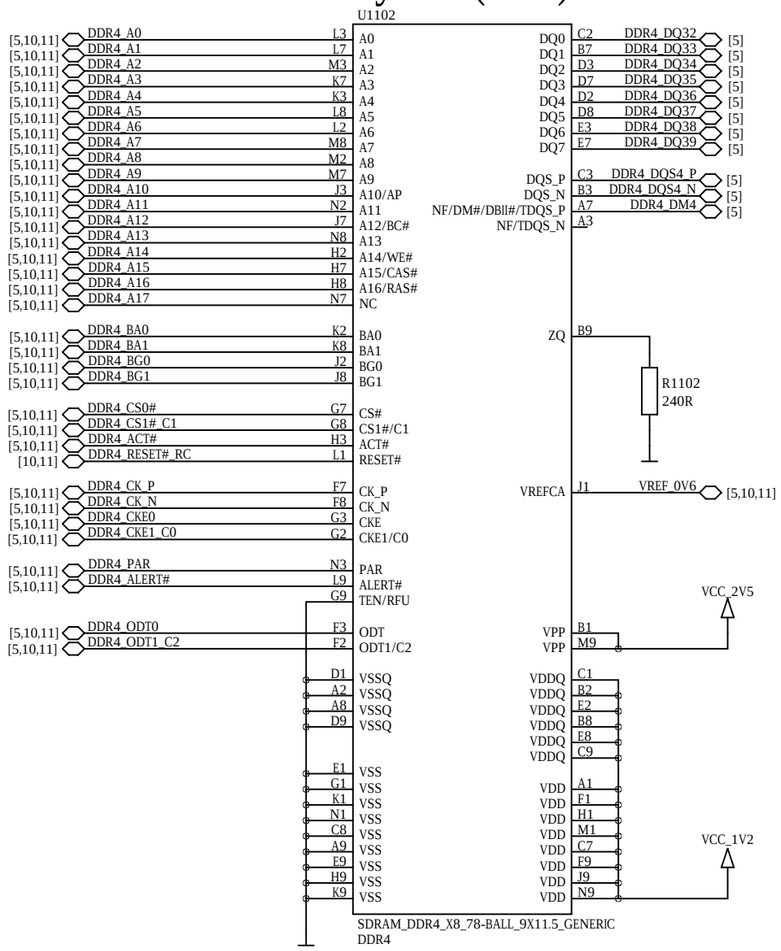

DDR4 Decoupling

not included in user schematics

This part is intentionally left blank.

I2C Level Shifter

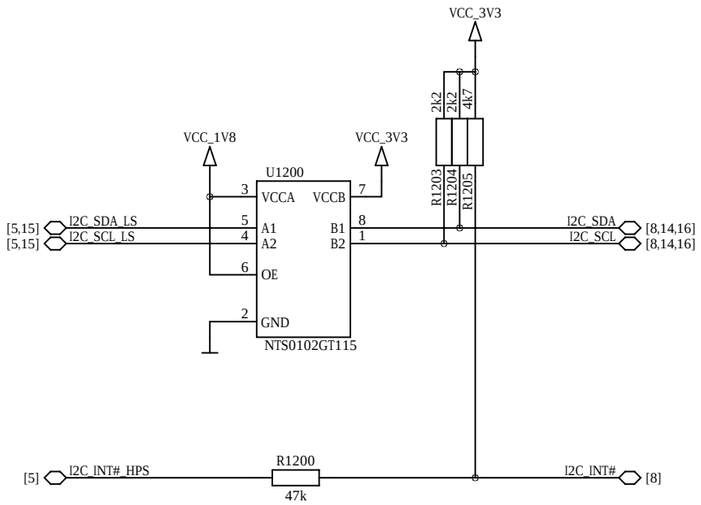

Quad SPI Flash

pin compatible with Altera EPCQL series

Altera EPCQL required for AS boot mode

pin compatible with Micron N25Q512A11G1240F

Altera and Micron require VCC_FLASH = 1.8V

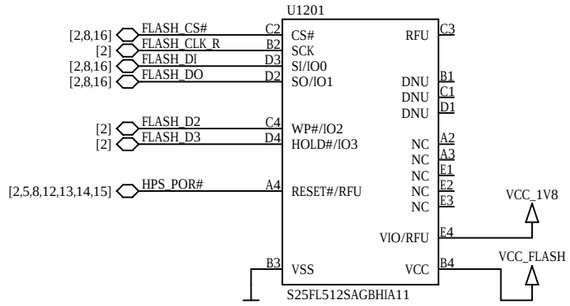

eMMC Flash

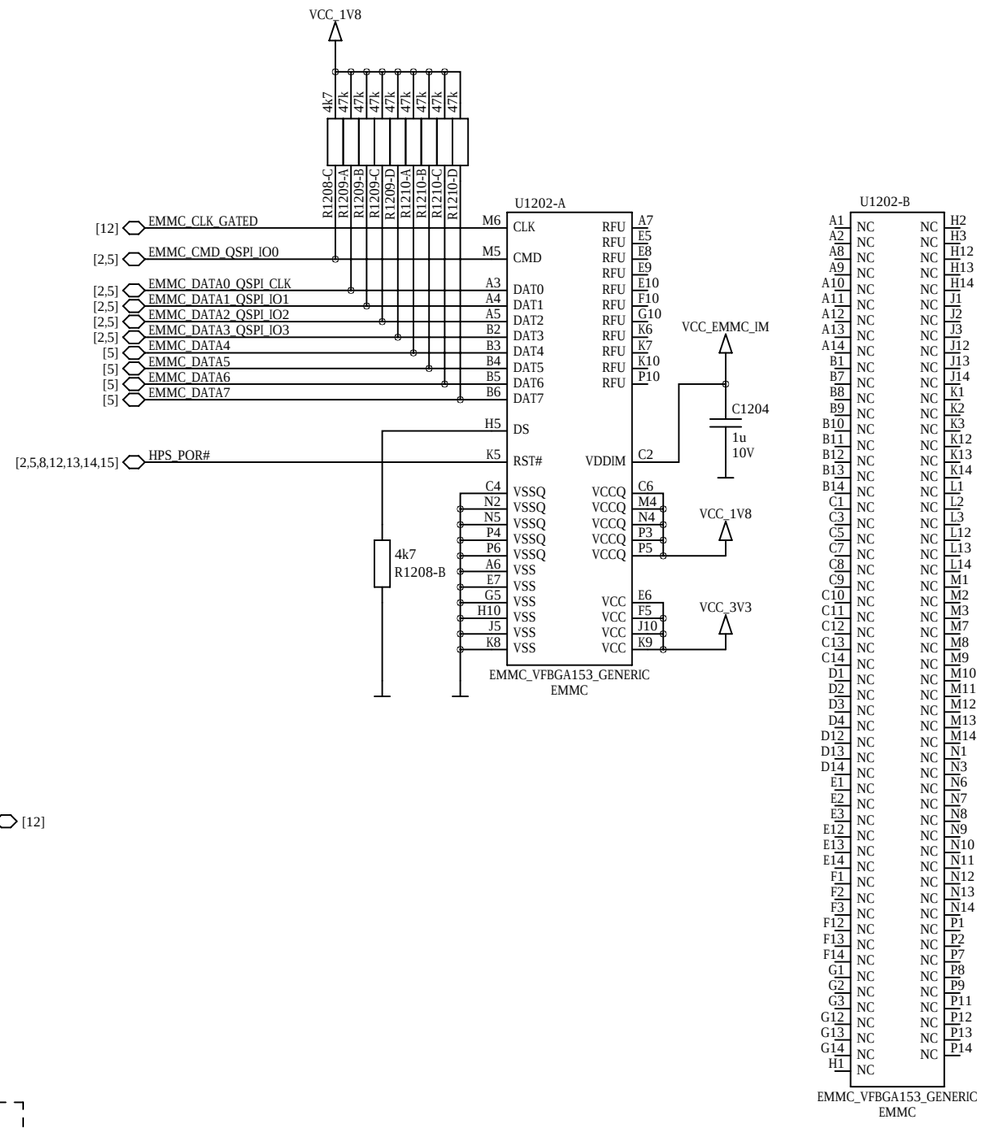

Clock Oscillator

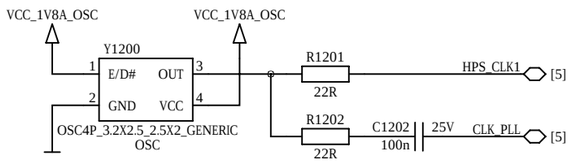

eMMC Clock Gate

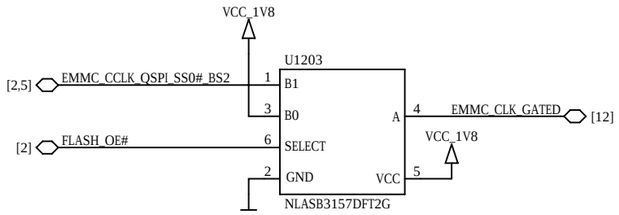

Oscillator Power Filter

not included in user schematics

This part is intentionally left blank.

Quad SPI Power

not included in user schematics

This part is intentionally left blank.

ENCLUSTRA	Copyright © 2021 by Enclustra GmbH	Sheet Name 12_OSCILLATOR_NAND_QSPI_EMMC	Customer No 0000	Revision R2.0	DNE = do not equip	Confidential	
	Company Enclustra FPGA Solution Center	Project Mercury+ AA1	Project No 419	Designed MHEI	Date 13 Apr 2021	Sheet/sheets 12 / 21	

Gigabit Ethernet PHY

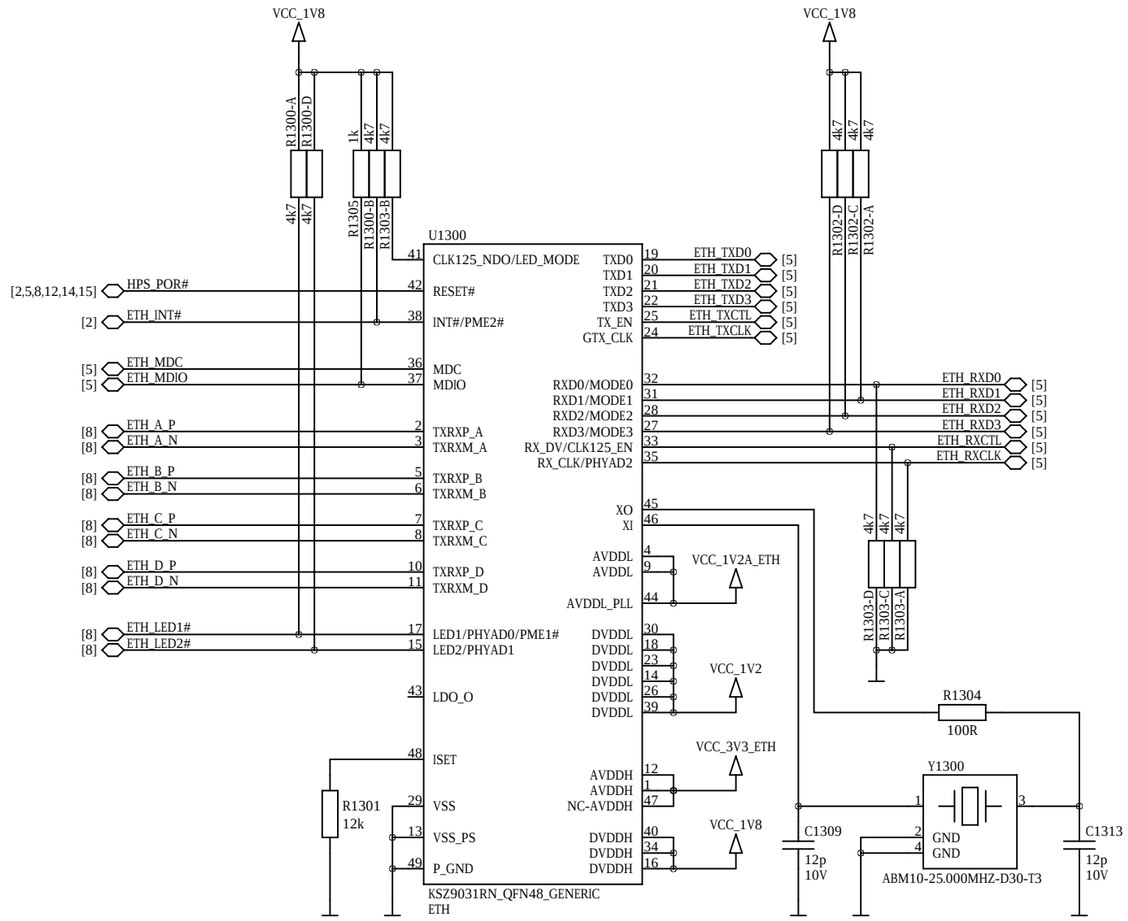

MODE<3:0> = 1110 -> RGMII, all capabilities
LED_Mode Pull up = Single LED
PhyAddress <2:0> = 011 -> 3
LED1 and LED2 are active low

Ethernet Power Filters

not included in user schematics

This part is intentionally left blank.

ENCLUSTRA	Copyright	© 2021 by Enclustra GmbH	Sheet Name	13_GIGABIT_ETHERNET_PHY	Customer No 0000	Revision R2.0	DNE = do not equip	Confidential
	Company	Enclustra FPGA Solution Center	Project	Mercury+ AA1	Project No 419	Designed MHEI	Date 13 Apr 2021	Sheet/sheets 13 / 21

USB 2.0 PHY

A-Device ID=GND, B-Device ID=Float, Not Used ID=VDD33

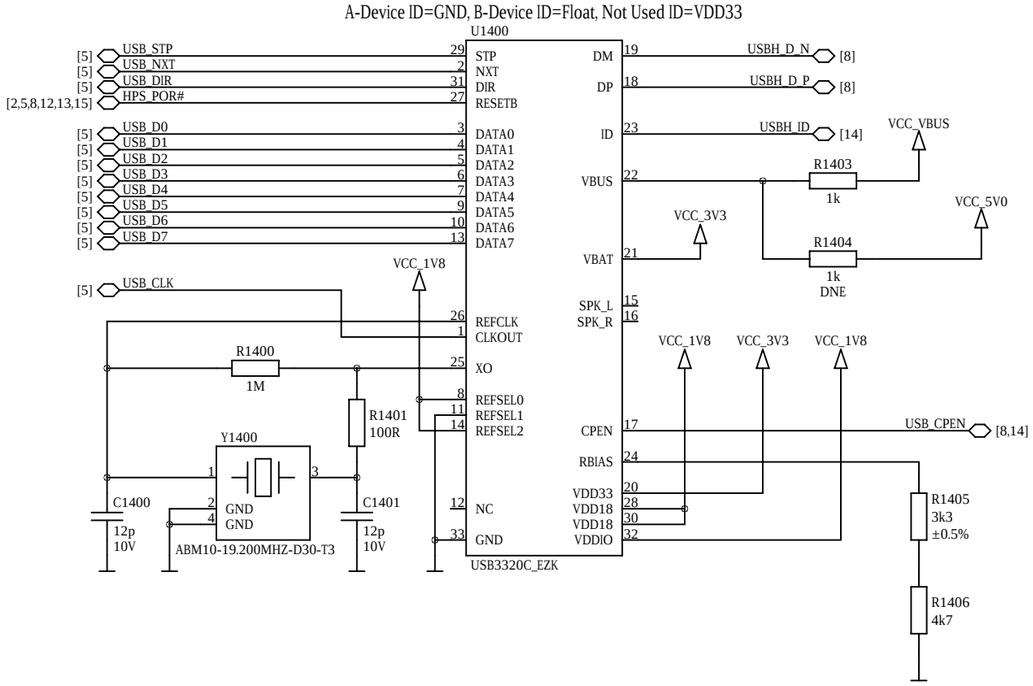

Real-time Clock

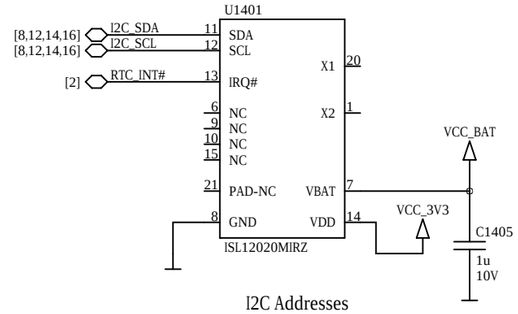

I2C Addresses

RTC registers: 1 1 0 1 1 1 1 Rw

User SRAM: 1 0 1 0 1 1 1 Rw

Secure EEPROMs

for Enclustra use only

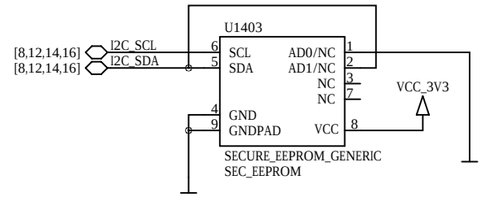

ATSHA204A-MAHDA-T I2C Address: 1 1 0 0 1 0 0 Rw

DS28CN01U-A00+ I2C Address: 1 0 1 1 1 0 0 Rw

USB 2.0 Host/Device Mode

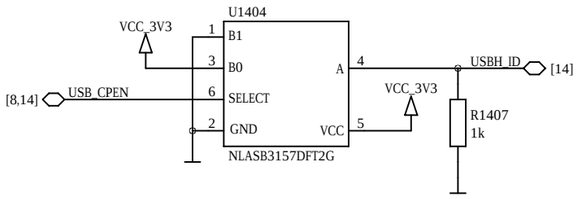

USB 2.0 Power Decoupling

not included in user schematics

This part is intentionally left blank.

ENCLUSTRA	Copyright	© 2021 by Enclustra GmbH	Sheet Name	14_USB2_PHY_RTC_EEPROM	Customer No	0000	Revision	R2.0	DNE = do not equip	Confidential
	Company	Enclustra FPGA Solution Center	Project	Mercury+ AA1	Project No	419	Designed	MHEI	Date 13 Apr 2021	Sheet/sheets 14 / 21

USB 3.0 Device Controller (Cypress FX3)

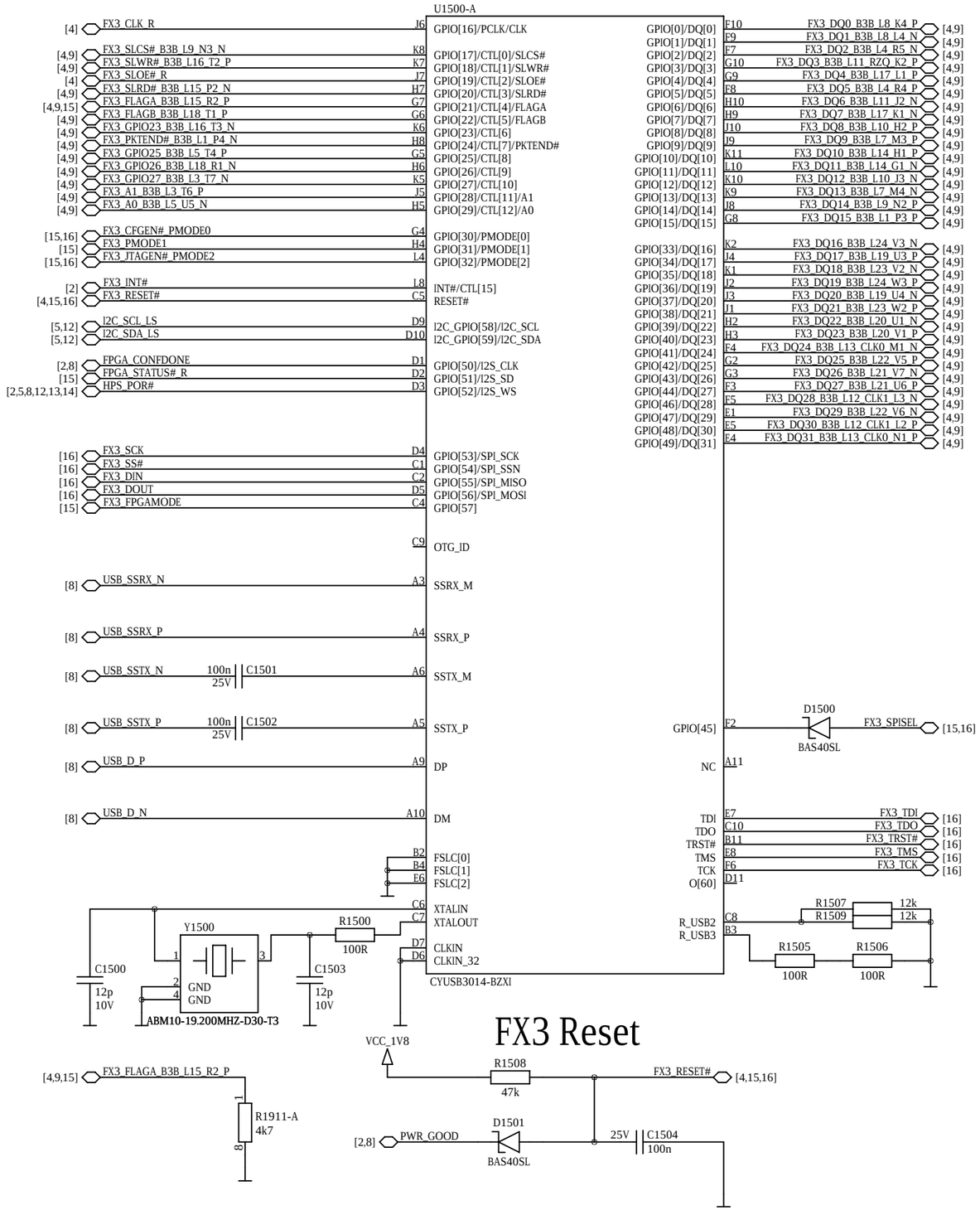

FX3 Reset

FX3 Miscellaneous

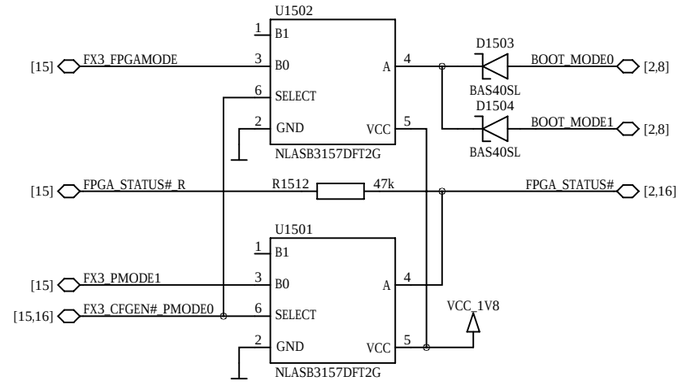

USB 3.0 VBUS Detect

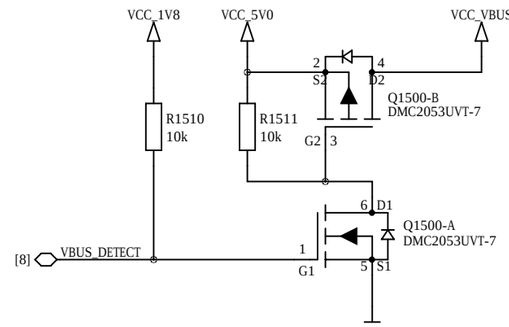

FX3 Boot Mode

SPI boot mode enabled with USB fall back

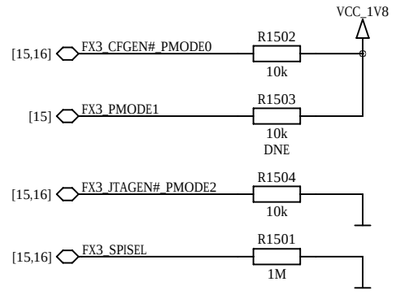

short R1501 to prevent FX3 to boot from SPI flash

ENCLUSTRA	Copyright	© 2021 by Enclustra GmbH	Sheet Name	15_USB3_DEVICE_CONTROLLER	Customer No	0000	Revision	R2.0	DNE = do not equip	Confidential
	Company	Enclustra FPGA Solution Center	Project	Mercury+ AA1	Project No	419	Designed	MHEI	Date 13 Apr 2021	Sheet/sheets 15 / 21

FX3 SPI Multiplexers

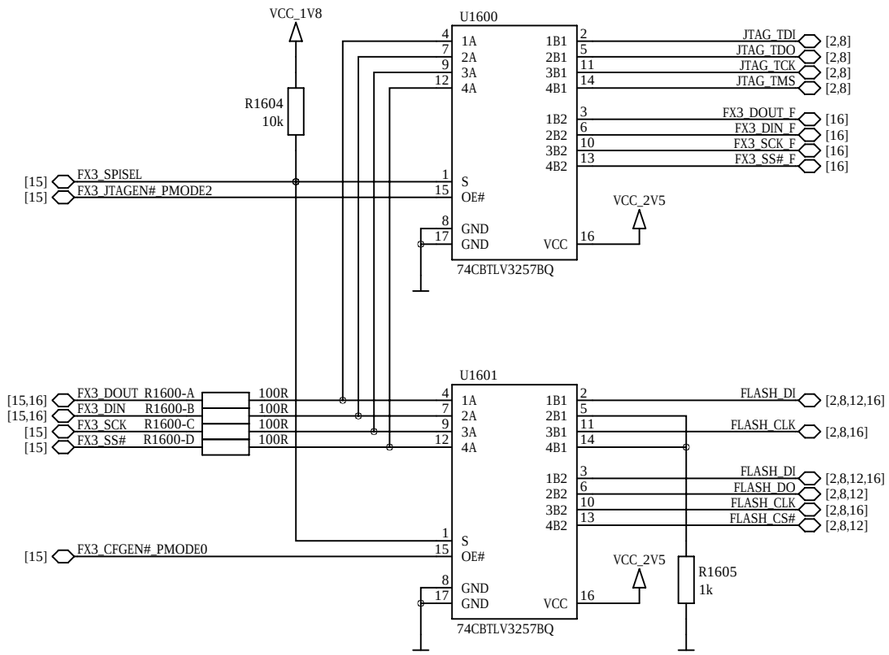

Debug Connector

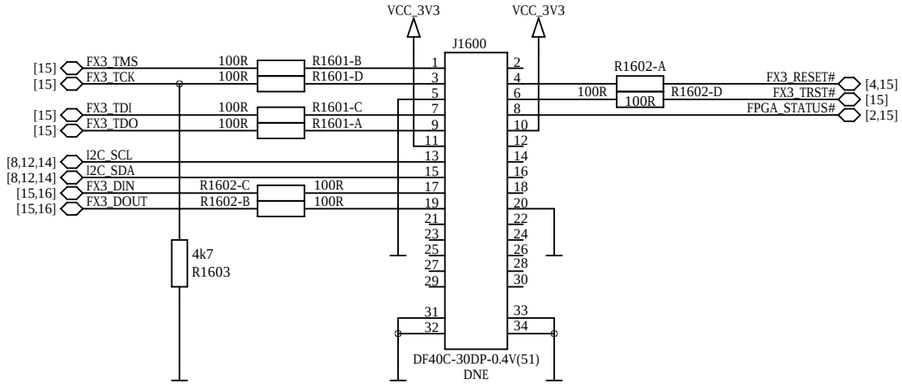

USB 3.0 Device Controller Power

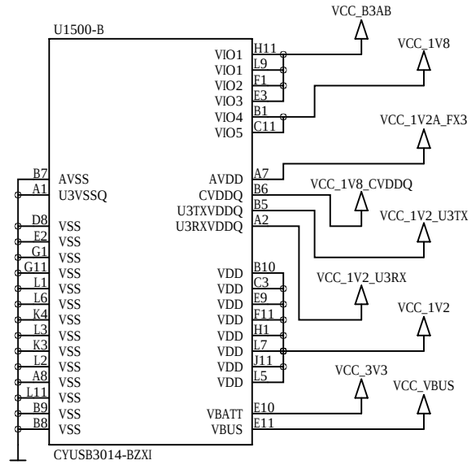

VIO1: GPIO[0..32], INT#
VIO2: GPIO[33..45]
VIO3: GPIO[46..52]
VIO4: GPIO[53..57] (SPI)
VIO5: GPIO[58..59] (I2C), JTAG

FX3 Power Filters

not included in user schematics

This part is intentionally left blank.

FX3 Decoupling

not included in user schematics

This part is intentionally left blank.

FX3 SPI Flash

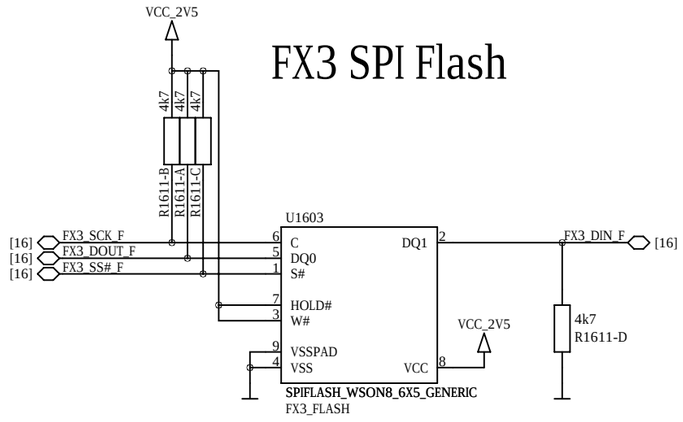

ENCLUSTRA	Copyright © 2021 by Enclustra GmbH	Sheet Name 16_USB3_PERIPHERALS_POWER	Customer No 0000	Revision R2.0	DNE = do not equip	Confidential	
	Company Enclustra FPGA Solution Center	Project Mercury+ AA1	Project No 419	Designed MHEI	Date 13 Apr 2021	Sheet/sheets 16 / 21	

DC / DC Converter 3.3V 9A 5%

not included in user schematics

This part is intentionally left blank.

DC / DC Converter 0.9V/0.95V 20A 3%

not included in user schematics

This part is intentionally left blank.

Supported Voltage Ranges

Power Rail	Direction	Range	Tolerance
VCC_MOD	input	5 - 15V	±5%
VCC_IO_B2A	input	1.2 - 1.8V	±5%
VCC_IO_B3AB	input	1.2 - 1.8V	±5%
VCC_IO_B3CD	input	1.2 - 1.8V	±5%
VCC_BAT	input	2.0 - 3.6V	-
VCC_3V3	output	3.3V	±5%
VCC_1V8	output	1.8V	±5%

Input Power Filter

not included in user schematics

This part is intentionally left blank.

LDO 5.0V 0.15A

not included in user schematics

This part is intentionally left blank.

PWR_INT_VSEL	VCC_INT
'Z' default	0.9V normal
'0' for speed grade -1 only	0.95V CPU overdrive
'1'	illegal

Dual DC/DC Converter

channel 1: 1.2V 2A 3%

channel 2: 1.8V 2A 5%

not included in user schematics

This part is intentionally left blank.

LDO 2.5V 0.15A

not included in user schematics

This part is intentionally left blank.

IO Voltage Generation

when C connector is not present on base board

not included in user schematics

This part is intentionally left blank.

DDR4 Termination Voltage Regulator

not included in user schematics

This part is intentionally left blank.

DDR4 VREF Decoupling

not included in user schematics

This part is intentionally left blank.

Dual DC/DC Converter

channel 1: 0.9/1.03V 2A 3%
channel 2: 1.8V 2A 5%
not included in user schematics

This part is intentionally left blank.

Voltage Monitoring

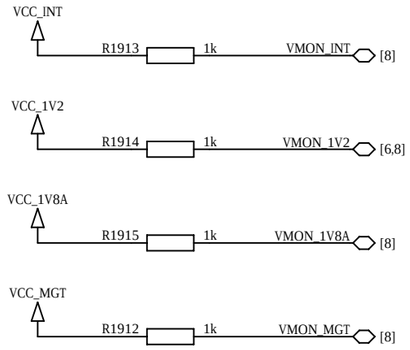

PWR_MGT_VSEL	VCC_MGT
'Z' default	1.03V high speed
'0'	0.9V normal
'1'	illegal

FPGA I/O Over-Voltage Protection

not included in user schematics

This part is intentionally left blank.

Voltage Reference

not included in user schematics

This part is intentionally left blank.

Module Mounting Holes M3

Z2000

ME-MOUNTING-HOLES_BOARD-73.8X54_13.4_69.9

FPGA Heat Sink

optional

Super-Grip

M2001

ATS-X50290P-C1-R0

DNE

PCB Fiducials

FID2002 Fiducial pcb

FID2006 Fiducial pcb

FID2010 Fiducial pcb

FID2003 Fiducial pcb

FID2007 Fiducial pcb

FID2011 Fiducial pcb

Panel Fiducials

FID2000 Fiducial panel

FID2004 Fiducial panel

FID2008 Fiducial panel

FID2012 Fiducial panel

FID2001 Fiducial panel

FID2005 Fiducial panel

FID2009 Fiducial panel

FID2013 Fiducial panel

Indication

Z2003 1mm square

Z2006 1mm square

Z2010 Copper triangle 1.0mm

PCB & Logo & Pin-1

P2000

ME-AA1-B

Z2004 LOGO

Enclustra (9.8x1.2mm)

Z2008 LABEL

EN-SN 6X15

Z2001 Text 0

Z2002 Text 1

Z2005 Text 2

Z2007 Text 3

Z2009 Text Mercury AA1

ENCLUSTRA	Copyright	© 2021 by Enclustra GmbH	Sheet Name	20_MECHANICS	Customer No	0000	Revision	R2.0	DNE = do not equip	Confidential
	Company	Enclustra FPGA Solution Center	Project	Mercury+ AA1	Project No	419	Designed	MHEI	Date 13 Apr 2021	Sheet/sheets 20 / 21

Component Variants

FPGA	DDR4		EMMC	Ethernet PHY	OSC	FX3_FLASH	SEC_EEPROM	L0U68	L1U
Part U200A 10AS027E2F29I2SG EN101440	Part U1000A K4A4G085WF-BITD EN102356	Part U1101A K4A4G085WF-BITD EN102356	Part U1202A EMMC16G-IB29-PZ90 EN102591	Part U1300A KSZ9031RNXIA EN101934	Part Y1200A ASDMB_33.333MHZ-LC-T EN100285	Part U1603:1 MX25V1635FZNI EN101997	Part U1403A ATSHA204A-MAHDA-T EN100827	Part L1700A 0u68 EN100848	Part L1801A 1u EN100784
Part U200B 10AS048E3F29I2SG EN101442	Part U1000B K4A8G085WB-BIRC EN101989	Part U1101B K4A8G085WB-BIRC EN101989	Part U1202B H26M52208FPRI EN101865		Part Y1200B ASEMB_33.333MHZ-LC-T EN100914	Part U1603:2 AT25SF161-MHD-T EN101939	Part U1403B DS28CN01U-A00+ EN100280	Part L1700B 1u EN100436	Part L1801B 1u0 EN101811
Part U200C 10AS027E4F29E3SG EN101516	Part U1000C K4A4G085WF-BCTD EN103075	Part U1101C K4A4G085WF-BCTD EN103075				Part U1603:3 IS25LP016D-JKLE EN101998			Part L1804A 1u EN100784
Part U200D 10AS048E2F29E1HG EN102967	Part U1001A K4A4G085WF-BITD EN102356	Part U1102A K4A4G085WF-BITD EN102356							Part L1804B 1u0 EN101811
	Part U1001B K4A8G085WB-BIRC EN101989	Part U1102B K4A8G085WB-BIRC EN101989							Part L1901A 1u EN100784
	Part U1001C K4A4G085WF-BCTD EN103075	Part U1102C K4A4G085WF-BCTD EN103075							Part L1901B 1u0 EN101811
	Part U1100A K4A4G085WF-BITD EN102356								Part L1904A 1u EN100784
	Part U1100B K4A8G085WB-BIRC EN101989								Part L1904B 1u0 EN101811
	Part U1100C K4A4G085WF-BCTD EN103075								

Assembly Variants

Assembly Variant	FPGA	DDR4	EMMC	Ethernet PHY	OSC	FX3_FLASH	SEC_EEPROM	L0U68	L1U
Variant EN101914:0 ME-AA1-270-3E4-D11E-R2	Option EN101914:1 FPGA EN101516	Option EN101914:2 DDR4 EN103075	Option EN101914:3 EMMC EN102591	Option EN101914:4 ETH EN101934	Option EN101914:5 OSC EN100914	Option EN101914:6 FX3_FLASH EN101997	Option EN101914:7 SEC_EEPROM EN100827	Option EN101914:8 L0U68 EN100848	Option EN101914:9 L1U EN100784
Variant EN101915:0 ME-AA1-270-2I2-D11E-R2	Option EN101915:1 FPGA EN101440	Option EN101915:2 DDR4 EN102356	Option EN101915:3 EMMC EN102591	Option EN101915:4 ETH EN101934	Option EN101915:5 OSC EN100914	Option EN101915:6 FX3_FLASH EN101997	Option EN101915:7 SEC_EEPROM EN100827	Option EN101915:8 L0U68 EN100848	Option EN101915:9 L1U EN100784
Variant EN101916:0 ME-AA1-480-1E2-D12E-R2	Option EN101916:1 FPGA EN102967	Option EN101916:2 DDR4 EN101989	Option EN101916:3 EMMC EN102591	Option EN101916:4 ETH EN101934	Option EN101916:5 OSC EN100914	Option EN101916:6 FX3_FLASH EN101997	Option EN101916:7 SEC_EEPROM EN100827	Option EN101916:8 L0U68 EN100848	Option EN101916:9 L1U EN100784
Variant EN101917:0 ME-AA1-480-2I3-D12E-R2	Option EN101917:1 FPGA EN101442	Option EN101917:2 DDR4 EN101989	Option EN101917:3 EMMC EN102591	Option EN101917:4 ETH EN101934	Option EN101917:5 OSC EN100914	Option EN101917:6 FX3_FLASH EN101997	Option EN101917:7 SEC_EEPROM EN100827	Option EN101917:8 L0U68 EN100848	Option EN101917:9 L1U EN100784