Enclustra User Schematic

Mercury+ MP1 Revision 1.0 V9

Disclaimer

User schematics do not include proprietary Enclustra design elements, such as power supply circuits.
These circuits use optimized designs which are extremely compact and remain proprietary to Enclustra.
The user manual provides all necessary information to use the module and its interfaces.

User schematics are provided after purchase of Enclustra hardware, and may also be provided in certain cases before purchase, to assist in product evaluation.
No part of the schematics may be copied or modified without written permission from Enclustra.

Full schematics, including a full bill-of-materials, may be available through the purchase of a hardware licence for the product in question.
Please contact Enclustra Sales for more information.

Note: DNE = Do Not Equip (parts not equipped by default)

© 2023 by Enclustra GmbH

Mercury+ MP1 SoC Module

Revision 1.0 V9

Sheet 01: Cover
Sheet 02: SoC FPGA Configuration
Sheet 03: SoC MSS Banks
Sheet 04: SoC GPIO Banks
Sheet 05: SoC GPIO Banks | User LEDs
Sheet 06: SoC HSIO Banks
Sheet 07: SoC XCVR Banks
Sheet 08: SoC FPGA Power
Sheet 09: Module Connectors A | B
Sheet 10: Module Connector C
Sheet 11: MSS DDR4 SDRAM Bytes 0-3
Sheet 12: MSS DDR4 SDRAM ECC
Sheet 13: FPGA DDR4 SDRAM Bytes 0-3
Sheet 14: FPGA DDR4 SDRAM Bytes 4-7
Sheet 15: Gigabit Ethernet PHYs
Sheet 16: eMMC | TPM | QSPI Flash
Sheet 17: USB 2.0 PHY | Oscillators
Sheet 18: I2C | RTC | EEPROM
Sheet 19: Power VDD | V-Monitoring
Sheet 20: Power 1.2V | 1.8V | 2.5V | 3.3V
Sheet 21: Mechanics
Sheet 22: Component Assembly
Sheet 23: Component Assembly

FPGA Configuration

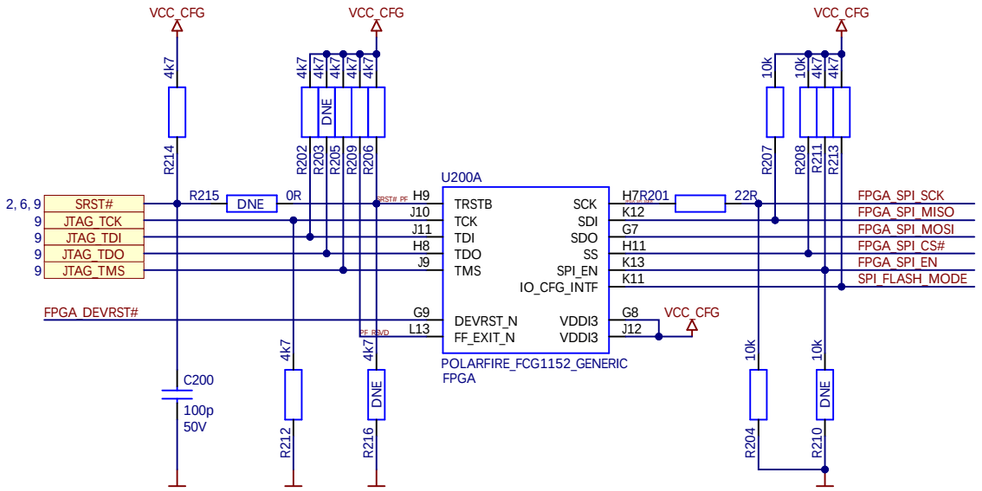

Programming Mode Configuration

SPI_FLASH_MODE	SRST#	SPI Master	SPI Slave	Bitstream Source
0	0	Carrier	SPI Flash	FPGA
0	1	Carrier	PF Bank 3	FPGA
1	X	PF Bank 3	SPI Flash	FPGA / SPI-Flash

SPI Flash

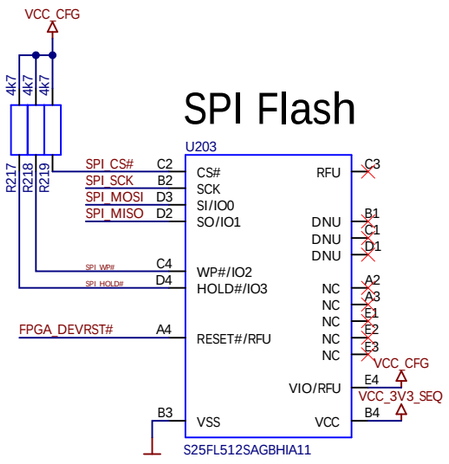

SPI Flash Power

not included in user schematics

Reset Generation

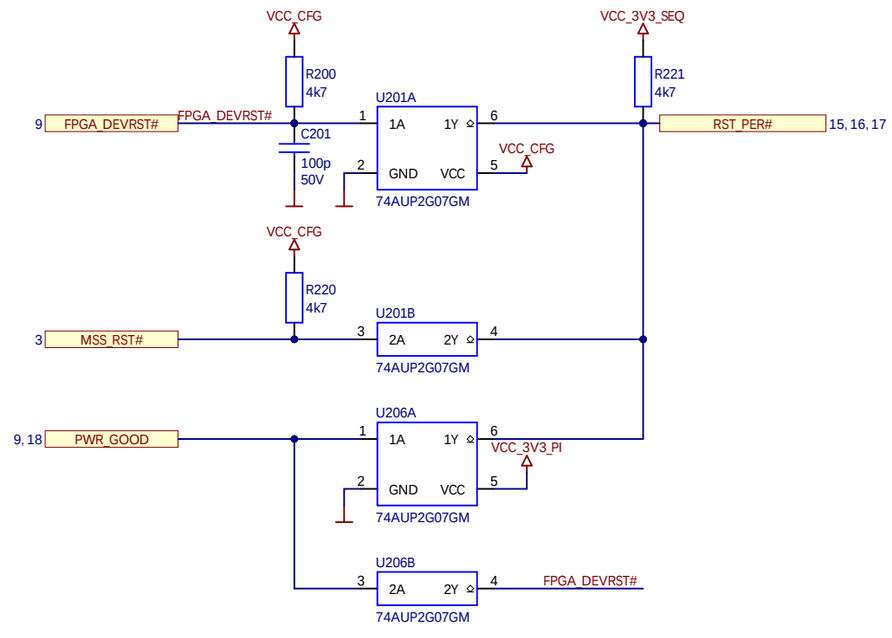

Flash Multiplexer

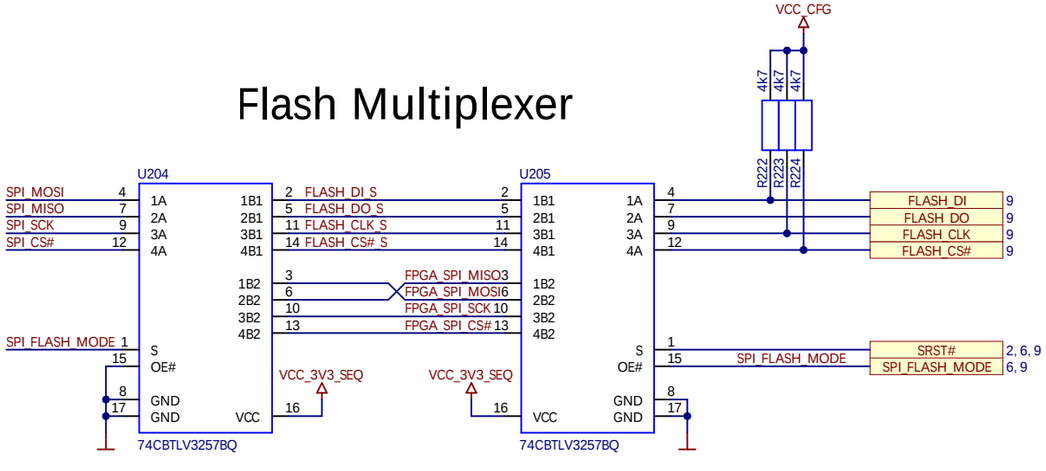

FPGA MSS Bank 2

VDDI = VCC_3V3_SEQ

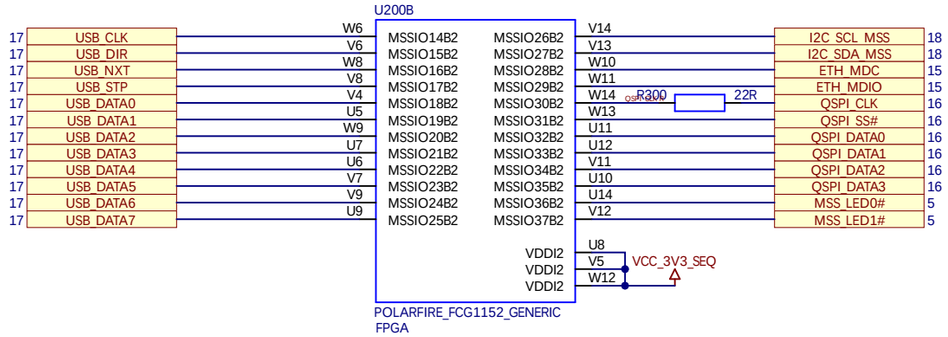

FPGA MSS Bank 4

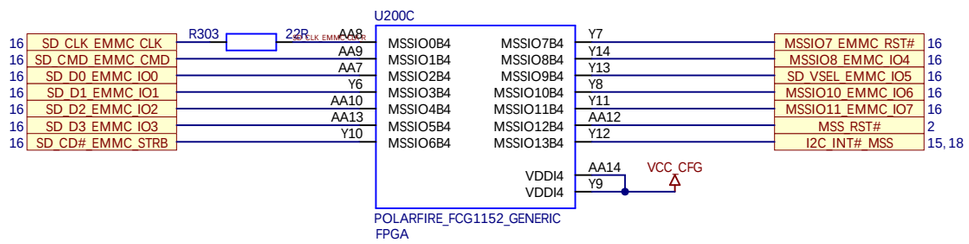

FPGA MSS Bank 5

VDDI = VCC_3V3_SEQ

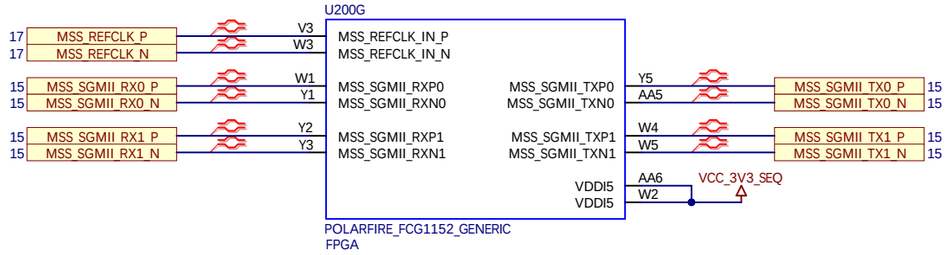

FPGA MSS DDR Bank 6

VDDI = VCC_1V2

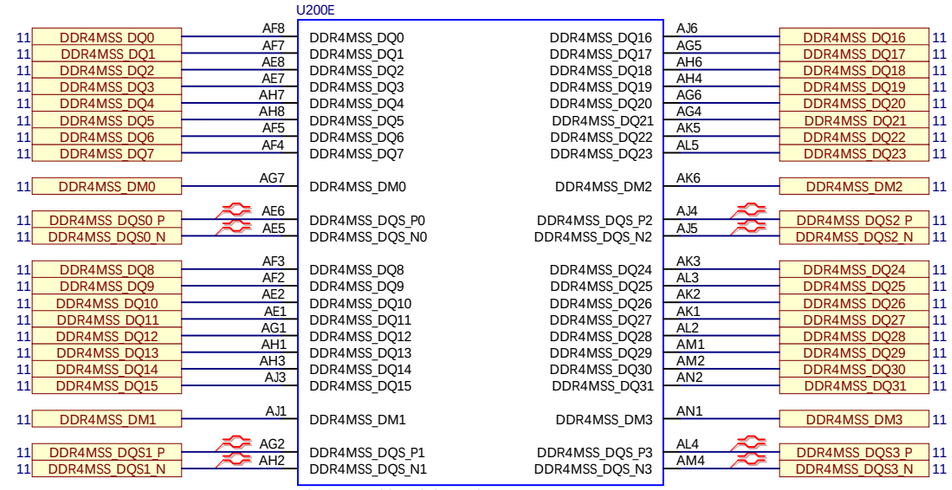

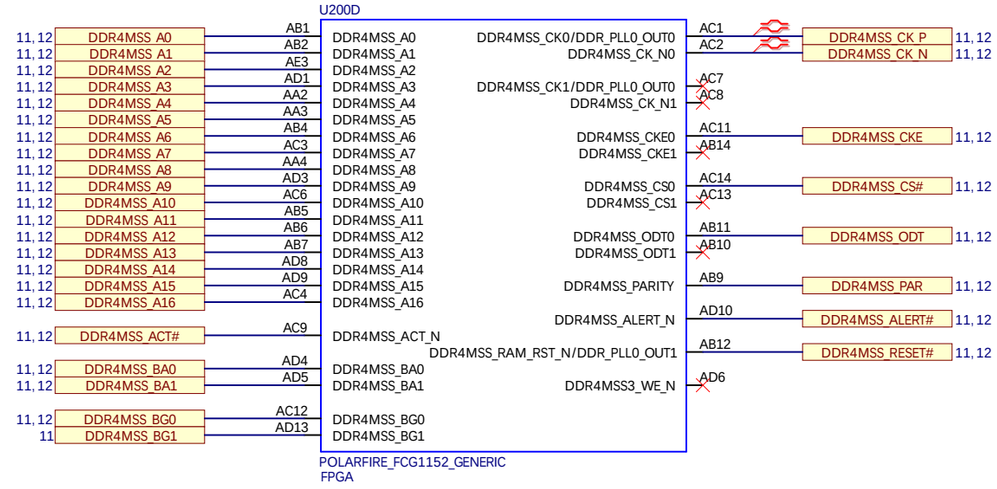

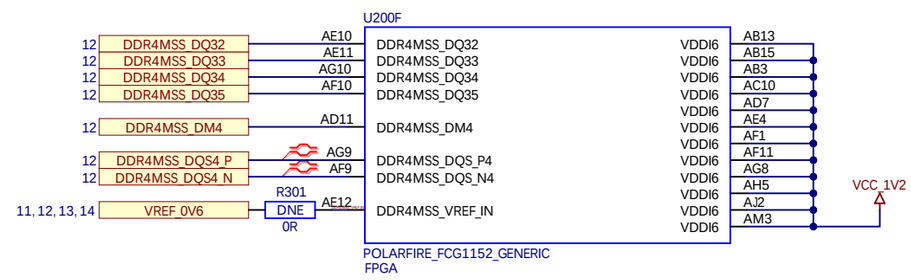

ENCLUSTRA FPGA SOLUTIONS	Project ME-MP1.PrjPcb	Sheet Name ME-MP1_P03_SOC_MSS.SchDoc	Customer No 0000	Revision R1.0 V9	DNE = Do Not Equip	Confidential
	Company Enclustra GmbH	Copyright © 2023 by Enclustra GmbH Switzerland	Project No 487	Designed MHEI	Date 17 Jan 2023	Sheet/sheets 3 / 23

FPGA GPIO Bank 1

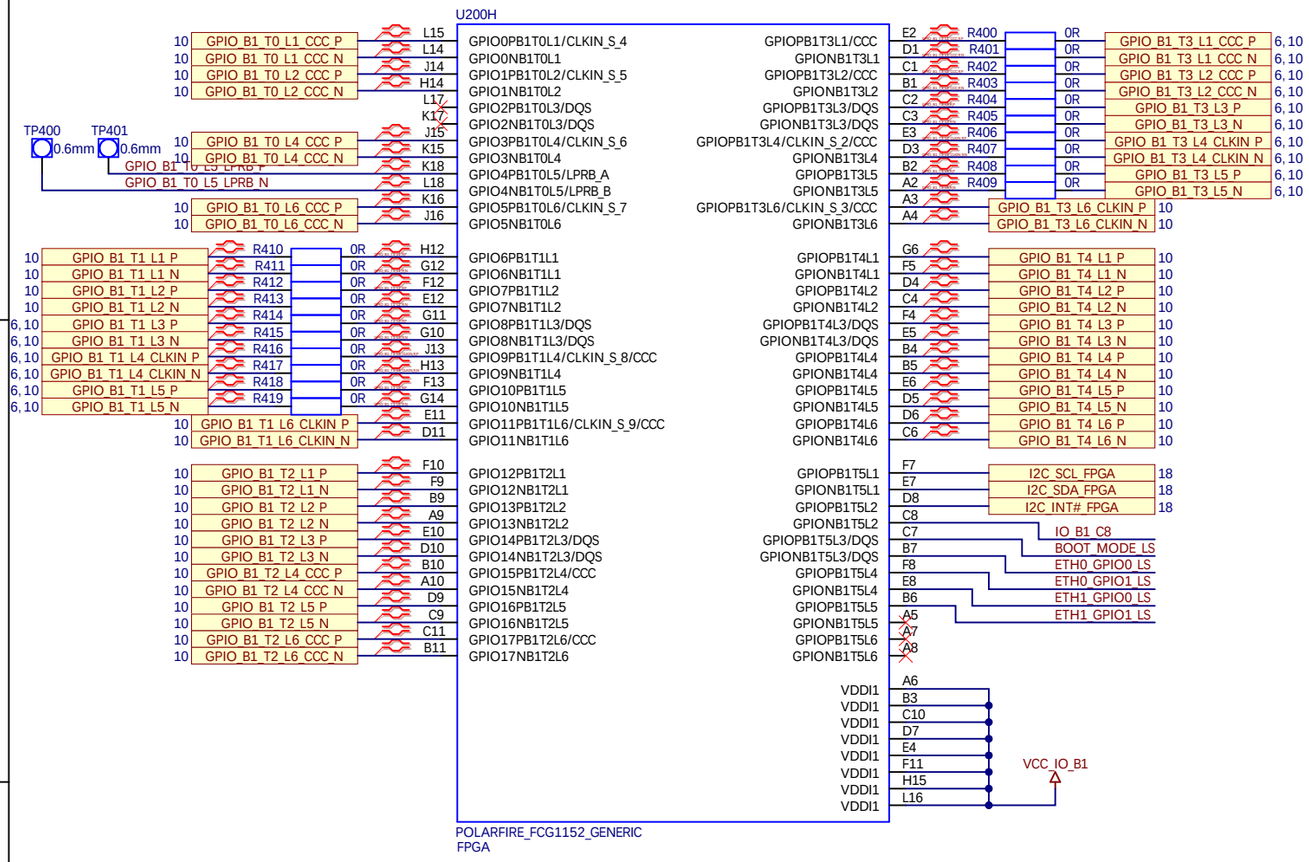

FPGA GPIO Bank 7

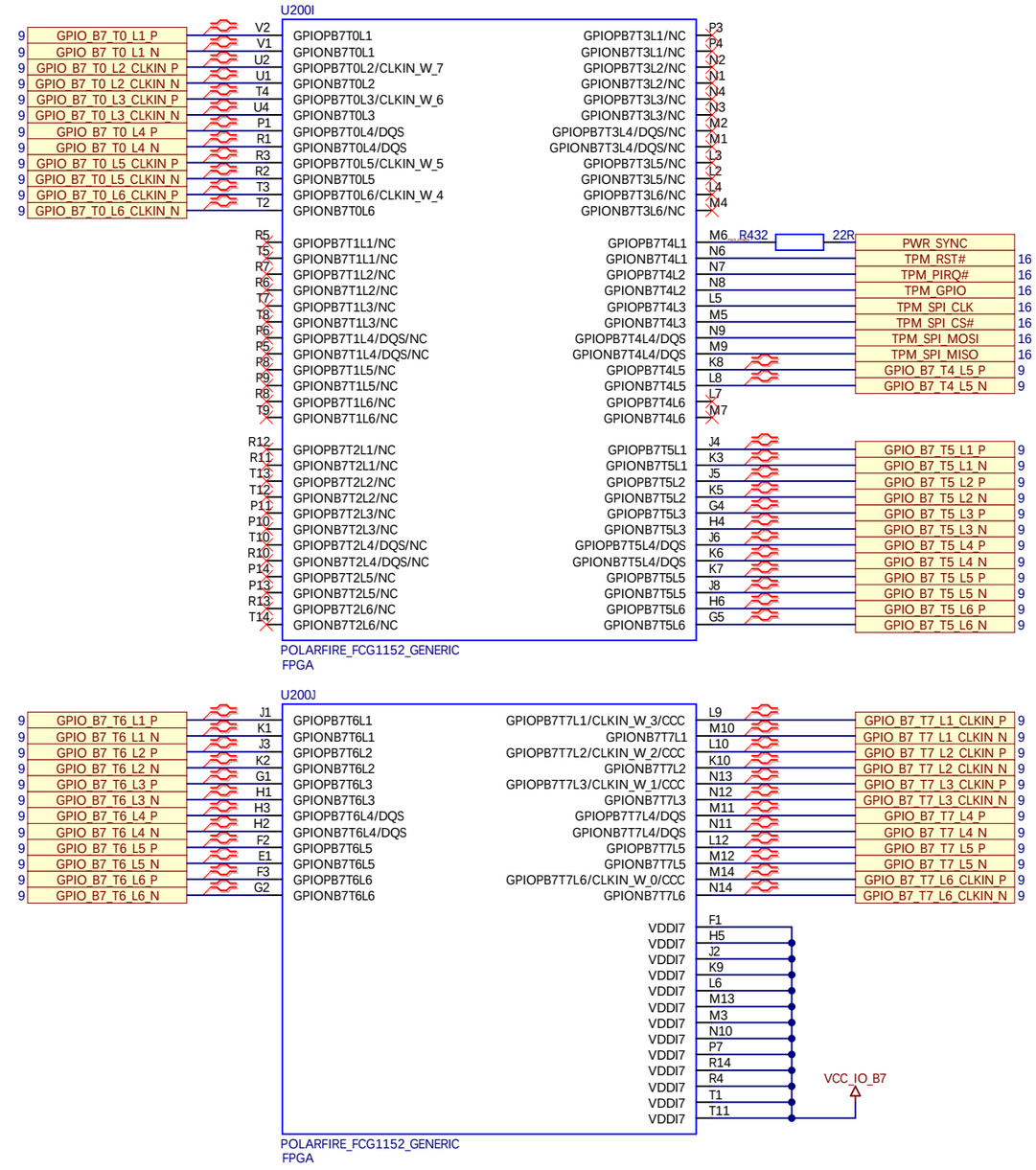

FPGA GPIO Bank 1 Level Shifter

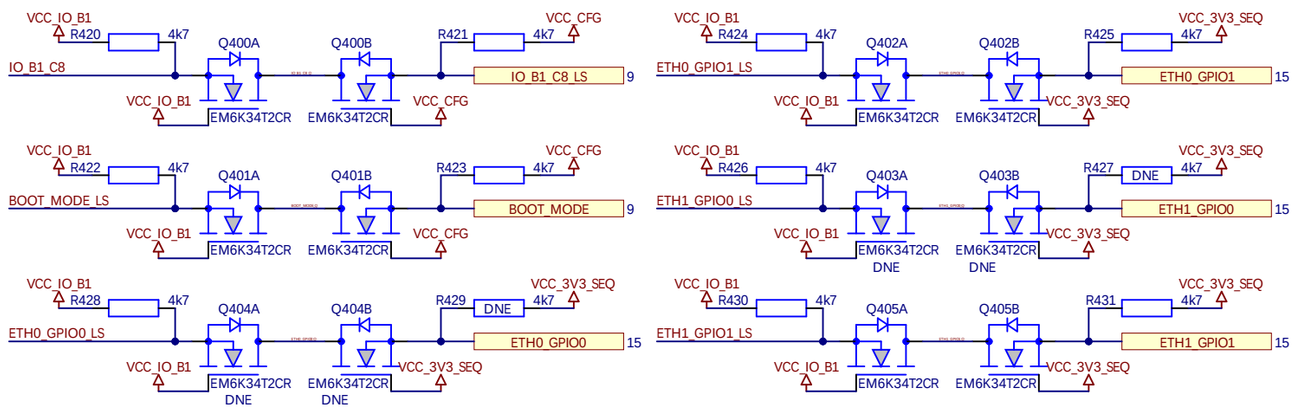

ENCLUSTRA FPGA SOLUTIONS	Project ME-MP1.PrjPcb	Sheet Name ME-MP1_P04_SOC_GPIO.SchDoc	Customer No 0000	Revision R1.0 V9	DNE = Do Not Equip	Confidential
	Company Enclustra GmbH	Copyright © 2023 by Enclustra GmbH Switzerland	Project No 487	Designed MHEI	Date 17 Jan 2023	Sheet/sheets 4 / 23

FPGA GPIO Bank 9

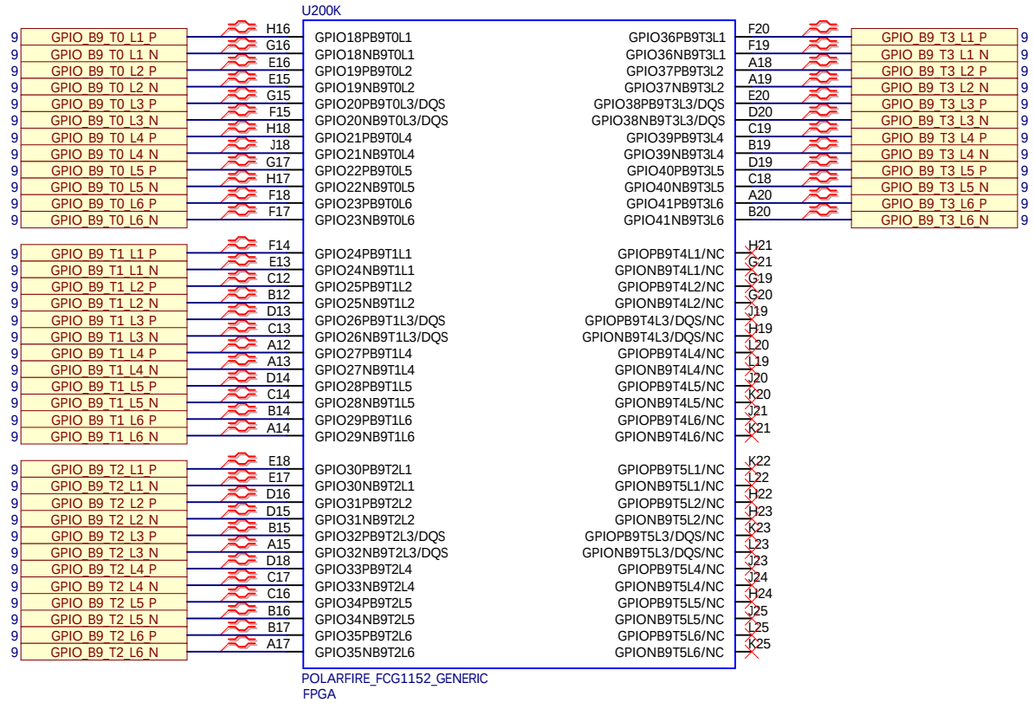

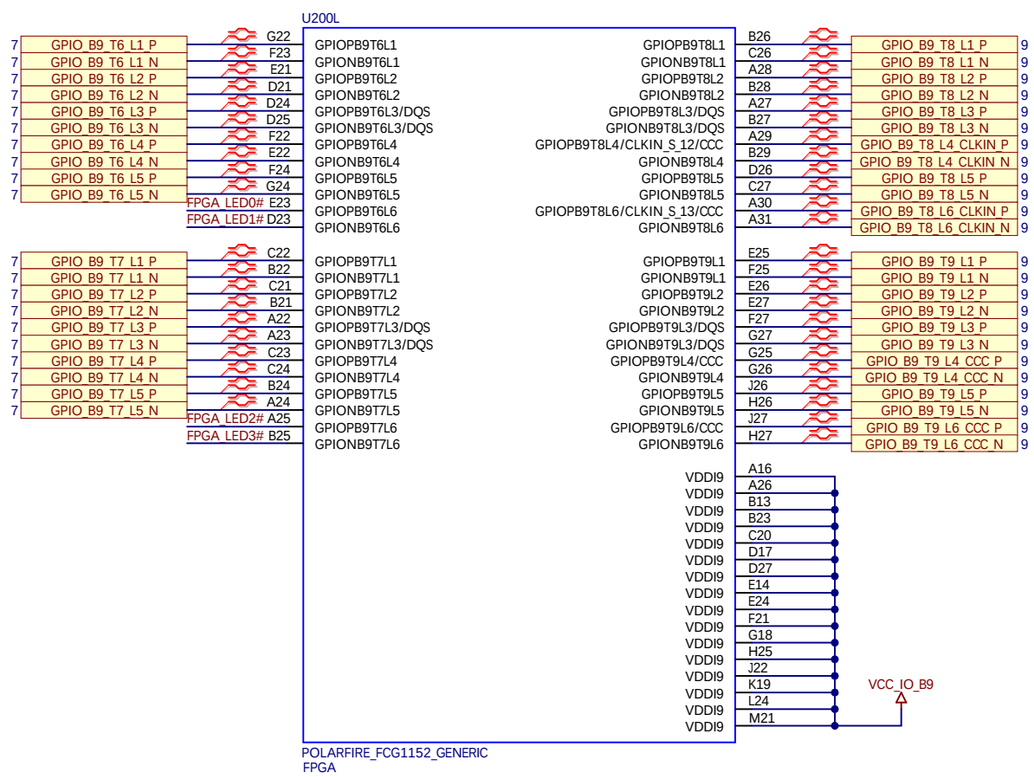

User LEDs

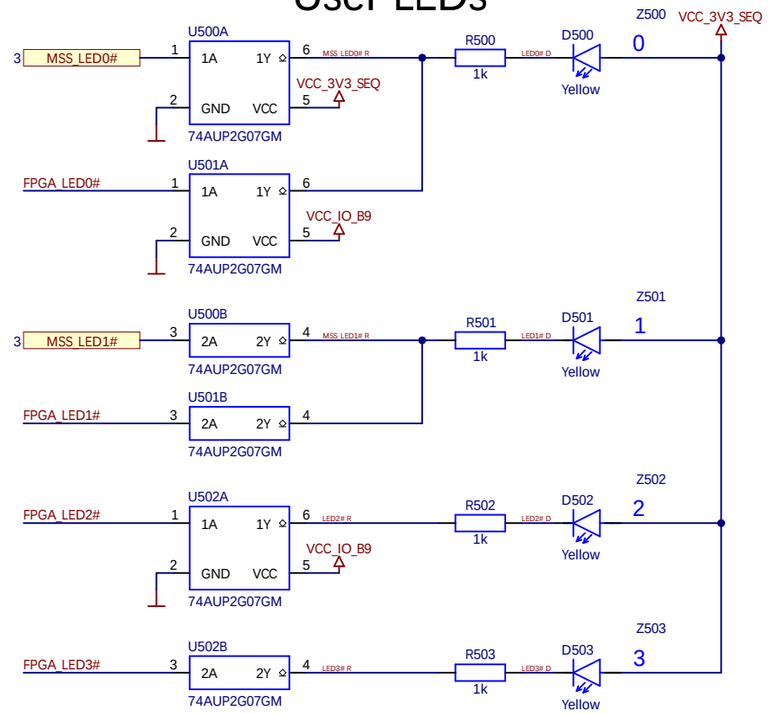

FPGA Decoupling

not included in user schematics

ENCLUSTRA FPGA SOLUTIONS	Project ME-MP1.PrjPcb	Sheet Name ME-MP1_P05_SOC_GPIO_USER_LEDS.SchDoc	Customer No 0000	Revision R1.0 V9	DNE = Do Not Equip	Confidential
	Company Enclustra GmbH	Copyright © 2023 by Enclustra GmbH Switzerland	Project No 487	Designed MHEI	Date 17 Jan 2023	Sheet/sheets 5 / 23

FPGA HSIO Bank 0

VDDI = VCC_1V2

U200M

Net	Pin	Function	Pin	Net
13,14 DDR4FPGA_A1	AN29	HSIOPB0T0L1/CCC	HSIOPB0T3L1/CLKIN_N_5	AF24 GND
13,14 DDR4FPGA_A0	AM29	HSIONB0T0L1	HSIONB0T3L1	AF23 DDR4FPGA_DQ0 13
13,14 DDR4FPGA_A3	AP28	HSIOPB0T0L2	HSIOPB0T3L2	AD24 DDR4FPGA_DQ2 13
13,14 DDR4FPGA_A2	AP29	HSIONB0T0L2	HSIONB0T3L2	AD25 DDR4FPGA_DQ1 13
13,14 DDR4FPGA_CK_P	AN28	HSIOPB0T0L3/CCC	HSIOPB0T3L3/CLKIN_N_4	AE22 DDR4FPGA_DQ4 13
13,14 DDR4FPGA_CK_N	AM28	HSIONB0T0L3	HSIONB0T3L3	AF22 DDR4FPGA_DQ3 13
IO_B0_AN26	AN26	HSIOPB0T0L4/DQS	HSIOPB0T3L4/DQS	AE23 DDR4FPGA_DQS0_P 13
IO_B0_AN27	AN27	HSIONB0T0L4/DQS	HSIONB0T3L4/DQS	AD23 DDR4FPGA_DQS0_N 13
13,14 DDR4FPGA_A5	AP25	HSIOPB0T0L5	HSIOPB0T3L5	AG22 DDR4FPGA_DQ6 13
13,14 DDR4FPGA_A4	AP26	HSIONB0T0L5	HSIONB0T3L5	AG21 DDR4FPGA_DQ5 13
13,14 DDR4FPGA_A7	AM26	HSIOPB0T0L6	HSIOPB0T3L6	AD21 DDR4FPGA_DM0 13
13,14 DDR4FPGA_A6	AM27	HSIONB0T0L6	HSIONB0T3L6	AE21 DDR4FPGA_DQ7 13
IO_B0_AL25	AL25	HSIOPB0T1L1/CLKIN_N_9/CCC	HSIOPB0T4L1/CLKIN_N_3/CCC	AH23 GND
13,14 DDR4FPGA_ALERT#	AM25	HSIONB0T1L1	HSIONB0T4L1	AJ23 DDR4FPGA_DQ8 13
13,14 DDR4FPGA_A9	AJ26	HSIOPB0T1L2	HSIOPB0T4L2	AK22 DDR4FPGA_DQ10 13
13,14 DDR4FPGA_A8	AJ27	HSIONB0T1L2	HSIONB0T4L2	AK23 DDR4FPGA_DQ9 13
FPGA_DONE_LS	AL24	HSIOPB0T1L3/CLKIN_N_8/CCC	HSIOPB0T4L3/CLKIN_N_2/CCC	AH19 DDR4FPGA_DQ12 13
IO_B0_AM24	AM24	HSIONB0T1L3	HSIONB0T4L3	AJ19 DDR4FPGA_DQ11 13
13,14 DDR4FPGA_A11	AL27	HSIOPB0T1L4/DQS	HSIOPB0T4L4/DQS	AH22 DDR4FPGA_DQS1_P 13
13,14 DDR4FPGA_A10	AK27	HSIONB0T1L4/DQS	HSIONB0T4L4/DQS	AH21 DDR4FPGA_DQS1_N 13
13,14 DDR4FPGA_A13	AJ25	HSIOPB0T1L5	HSIOPB0T4L5/CCC	AK20 DDR4FPGA_DQ14 13
13,14 DDR4FPGA_A12	AJ24	HSIONB0T1L5	HSIONB0T4L5	AJ20 DDR4FPGA_DQ13 13
13,14 DDR4FPGA_A15	AK25	HSIOPB0T1L6	HSIOPB0T4L6/CCC	AJ21 DDR4FPGA_DM1 13
13,14 DDR4FPGA_A14	AK26	HSIONB0T1L6	HSIONB0T4L6	AK21 DDR4FPGA_DQ15 13
13,14 DDR4FPGA_BA0	AH27	HSIOPB0T2L1/CLKIN_N_7	HSIOPB0T5L1	AP24 DDR4FPGA_DQ17 13
13,14 DDR4FPGA_A16	AH26	HSIONB0T2L1	HSIONB0T5L1	AN24 DDR4FPGA_DQ16 13
13,14 DDR4FPGA_ACT#	AF27	HSIOPB0T2L2	HSIOPB0T5L2	AL22 DDR4FPGA_DQ19 13
13,14 DDR4FPGA_BA1	AG27	HSIONB0T2L2	HSIONB0T5L2	AL23 DDR4FPGA_DQ18 13
13 DDR4FPGA_BG1	AE27	HSIOPB0T2L3/CLKIN_N_6	HSIOPB0T5L3	AP23 DDR4FPGA_DQ21 13
13,14 DDR4FPGA_BG0	AE26	HSIONB0T2L3	HSIONB0T5L3	AN23 DDR4FPGA_DQ20 13
13,14 DDR4FPGA_CKE	AH24	HSIOPB0T2L4/DQS	HSIOPB0T5L4/DQS	AN22 DDR4FPGA_DQS2_P 13
13,14 DDR4FPGA_CS#	AG24	HSIONB0T2L4/DQS	HSIONB0T5L4/DQS	AM22 DDR4FPGA_DQS2_N 13
13,14 DDR4FPGA_RESET#	AG26	HSIOPB0T2L5	HSIOPB0T5L5	AP20 DDR4FPGA_DQ23 13
13,14 DDR4FPGA_ODT	AG25	HSIONB0T2L5	HSIONB0T5L5	AP21 DDR4FPGA_DQ22 13
IO_B0_AE25_PERST#_LS	AE25	HSIOPB0T2L6	HSIOPB0T5L6	AN21 GND
13,14 DDR4FPGA_PAR	AF25	HSIONB0T2L6	HSIONB0T5L6	AM21 DDR4FPGA_DM2 13

POLARFIRE_FCG1152_GENERIC
FPGA

FPGA HSIO Bank 8

VDDI = VCC_1V2

U200O

Net	Pin	Function	Pin	Net
14 DDR4FPGA_DQ33	AN11	HSIOPB8T0L1	HSIOPB8T3L1	AL10 DDR4FPGA_DQ57 14
14 DDR4FPGA_DQ32	AN12	HSIONB8T0L1	HSIONB8T3L1	AL9 DDR4FPGA_DQ56 14
14 DDR4FPGA_DQ35	AP10	HSIOPB8T0L2	HSIOPB8T3L2	AH9 DDR4FPGA_DQ59 14
14 DDR4FPGA_DQ34	AP11	HSIONB8T0L2	HSIONB8T3L2	AJ9 DDR4FPGA_DQ58 14
14 DDR4FPGA_DQ37	AM11	HSIOPB8T0L3	HSIOPB8T3L3	AJ8 DDR4FPGA_DQ61 14
14 DDR4FPGA_DQ36	AM12	HSIONB8T0L3	HSIONB8T3L3	AK8 DDR4FPGA_DQ60 14
14 DDR4FPGA_DQS4_P	AN9	HSIOPB8T0L4/DQS	HSIOPB8T3L4/DQS	AJ10 DDR4FPGA_DQS7_P 14
14 DDR4FPGA_DQS4_N	AP9	HSIONB8T0L4/DQS	HSIONB8T3L4/DQS	AK10 DDR4FPGA_DQS7_N 14
14 DDR4FPGA_DQ39	AN8	HSIOPB8T0L5	HSIOPB8T3L5	AL8 DDR4FPGA_DQ63 14
14 DDR4FPGA_DQ38	AP8	HSIONB8T0L5	HSIONB8T3L5	AK7 DDR4FPGA_DQ62 14
GND	AM9	HSIOPB8T0L6	HSIOPB8T3L6	AK11 GND
14 DDR4FPGA_DM4	AM10	HSIONB8T0L6	HSIONB8T3L6	AJ11 DDR4FPGA_DM7 14
14 DDR4FPGA_DQ41	AL12	HSIOPB8T1L1	HSIOPB8T4L1/CCC	AN6 R604 49R9 GPIO_B1_T1_L3_P 4,10
14 DDR4FPGA_DQ40	AK12	HSIONB8T1L1	HSIONB8T4L1	AN7 R605 49R9 GPIO_B1_T1_L3_N 4,10
14 DDR4FPGA_DQ43	AF12	HSIOPB8T1L2	HSIOPB8T4L2	AP5 R606 49R9 GPIO_B1_T1_L4_CLKIN_P 4,10
14 DDR4FPGA_DQ42	AG12	HSIONB8T1L2	HSIONB8T4L2	AP6 R607 49R9 GPIO_B1_T1_L4_CLKIN_N 4,10
14 DDR4FPGA_DQ45	AJ13	HSIOPB8T1L3	HSIOPB8T4L3/CCC	AL7 R608 49R9 GPIO_B1_T1_L5_P 4,10
14 DDR4FPGA_DQ44	AK13	HSIONB8T1L3	HSIONB8T4L3	AM7 R609 49R9 GPIO_B1_T1_L5_N 4,10
14 DDR4FPGA_DQS5_P	AH12	HSIOPB8T1L4/DQS	HSIOPB8T4L4/DQS	AN4
14 DDR4FPGA_DQS5_N	AH13	HSIONB8T1L4/DQS	HSIONB8T4L4/DQS	AP4 IO_B8_AN4_UARTRX_LS
14 DDR4FPGA_DQ47	AH14	HSIOPB8T1L5	HSIOPB8T4L5/CLKIN_N_13/CCC	AN3 IO_B8_AP4_UARTTX_LS
14 DDR4FPGA_DQ46	AJ14	HSIONB8T1L5	HSIONB8T4L5	AP3 SPI_FLASH_MODE_LS
GND	AG11	HSIOPB8T1L6	HSIOPB8T4L6/CLKIN_N_12/CCC	AM5 SRST# LS
14 DDR4FPGA_DM5	AH11	HSIONB8T1L6	HSIONB8T4L6	AM6 CLK50 17
14 DDR4FPGA_DQ49	AE16	HSIOPB8T2L1	VDDI8	AD17 SDIO_SEL LS
14 DDR4FPGA_DQ48	AD16	HSIONB8T2L1	VDDI8	AE14
14 DDR4FPGA_DQ51	AD15	HSIOPB8T2L2	VDDI8	AH15
14 DDR4FPGA_DQ50	AD14	HSIONB8T2L2	VDDI8	AJ12
14 DDR4FPGA_DQ53	AE13	HSIOPB8T2L3	VDDI8	AK9
14 DDR4FPGA_DQ52	AF13	HSIONB8T2L3	VDDI8	AL6 VCC_1V2
14 DDR4FPGA_DQS6_P	AG16	HSIOPB8T2L4/DQS	VDDI8	AN10
14 DDR4FPGA_DQS6_N	AG15	HSIONB8T2L4/DQS	VDDI8	AP7
14 DDR4FPGA_DQ55	AF14	HSIOPB8T2L5		
14 DDR4FPGA_DQ54	AG14	HSIONB8T2L5		
GND	AE15	HSIOPB8T2L6		
14 DDR4FPGA_DM6	AF15	HSIONB8T2L6		

POLARFIRE_FCG1152_GENERIC
FPGA

U200N

Net	Pin	Function	Pin	Net
13 DDR4FPGA_DQ25	AL20	HSIOPB0T6L1	HSIOPB0T8L1/NC	AJ18 R620 PF460 49R9 GPIO_B1_T3_L1_CCC_P 4,10
13 DDR4FPGA_DQ24	AM20	HSIONB0T6L1	HSIONB0T8L1/NC	AK18 R621 PF460 49R9 GPIO_B1_T3_L1_CCC_N 4,10
13 DDR4FPGA_DQ27	AN19	HSIOPB0T6L2	HSIOPB0T8L2/NC	AH18 R622 PF460 49R9 GPIO_B1_T3_L2_CCC_P 4,10
13 DDR4FPGA_DQ26	AP19	HSIONB0T6L2	HSIONB0T8L2/NC	AG17 R623 PF460 49R9 GPIO_B1_T3_L2_CCC_N 4,10
13 DDR4FPGA_DQ29	AL19	HSIOPB0T6L3	HSIOPB0T8L3/NC	AJ16 R624 PF460 49R9 GPIO_B1_T3_L3_P 4,10
13 DDR4FPGA_DQ28	AM19	HSIONB0T6L3	HSIONB0T8L3/NC	AJ15 R625 PF460 49R9 GPIO_B1_T3_L3_N 4,10
13 DDR4FPGA_DQS3_P	AN18	HSIOPB0T6L4/DQS	HSIOPB0T8L4/DQS/NC	AK17 R626 PF460 49R9 GPIO_B1_T3_L4_CLKIN_P 4,10
13 DDR4FPGA_DQS3_N	AP18	HSIONB0T6L4/DQS	HSIONB0T8L4/DQS/NC	AK16 R627 PF460 49R9 GPIO_B1_T3_L4_CLKIN_N 4,10
13 DDR4FPGA_DQ31	AM17	HSIOPB0T6L5	HSIOPB0T8L5/NC	AK15 R628 PF460 49R9 GPIO_B1_T3_L5_P 4,10
13 DDR4FPGA_DQ30	AN17	HSIONB0T6L5	HSIONB0T8L5/NC	AL15 R629 PF460 49R9 GPIO_B1_T3_L5_N 4,10
GND	AL18	HSIOPB0T6L6	HSIOPB0T8L6/NC	AH16
13 DDR4FPGA_DM3	AL17	HSIONB0T6L6	HSIONB0T8L6/NC	AH17
	AN16	HSIOPB0T7L1/NC	HSIOPB0T9L1/NC	AG20
	AP16	HSIONB0T7L1/NC	HSIONB0T9L1/NC	AF20
	AM15	HSIOPB0T7L2/NC	HSIOPB0T9L2/NC	AD19
	AM16	HSIONB0T7L2/NC	HSIONB0T9L2/NC	AD18
	AP14	HSIOPB0T7L3/NC	HSIOPB0T9L3/NC	AF19
	AP15	HSIONB0T7L3/NC	HSIONB0T9L3/NC	AG19
	AM14	HSIOPB0T7L4/DQS/NC	HSIOPB0T9L4/DQS/NC	AF18
	AN14	HSIONB0T7L4/DQS/NC	HSIONB0T9L4/DQS/NC	AE18
	AN13	HSIOPB0T7L5/NC	HSIOPB0T9L5/NC	AD20
	AP13	HSIONB0T7L5/NC	HSIONB0T9L5/NC	AE20
	AL14	HSIOPB0T7L6/NC	HSIOPB0T9L6/NC	AF17
	AL13	HSIONB0T7L6/NC	HSIONB0T9L6/NC	AE17
			VDDI0	AC20
			VDDI0	AC22
			VDDI0	AE24
			VDDI0	AF21
			VDDI0	AG18
			VDDI0	AH25
			VDDI0	AJ22
			VDDI0	AK19
			VDDI0	AL16
			VDDI0	AL26
			VDDI0	AM13
			VDDI0	AM23
			VDDI0	AN20
			VDDI0	AP17
			VDDI0	AP27

VCC_1V2

POLARFIRE_FCG1152_GENERIC
FPGA

FPGA HSIO Bank 8 Level Shifter

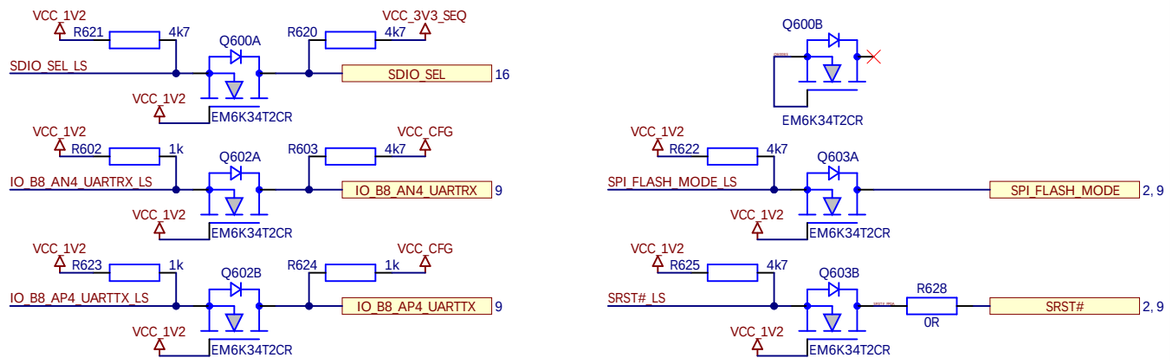

FPGA HSIO Bank 0 Level Shifter

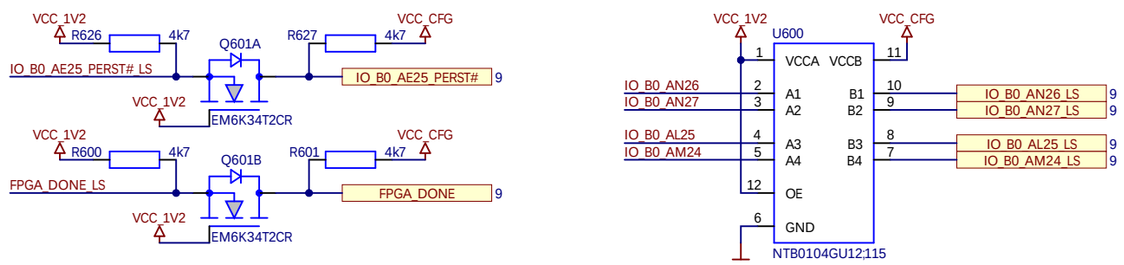

ENCLUSTRA FPGA SOLUTIONS	Project ME-MP1.PrjPcb	Sheet Name ME-MP1_P06_SOC_HSIO.SchDoc	Customer No 0000	Revision R1.0 V9	DNE = Do Not Equip	Confidential
	Company Enclustra GmbH	Copyright © 2023 by Enclustra GmbH Switzerland	Project No 487	Designed MHEI	Date 17 Jan 2023	Sheet/sheets 6 / 23

FPGA XCVR Quads 0-4

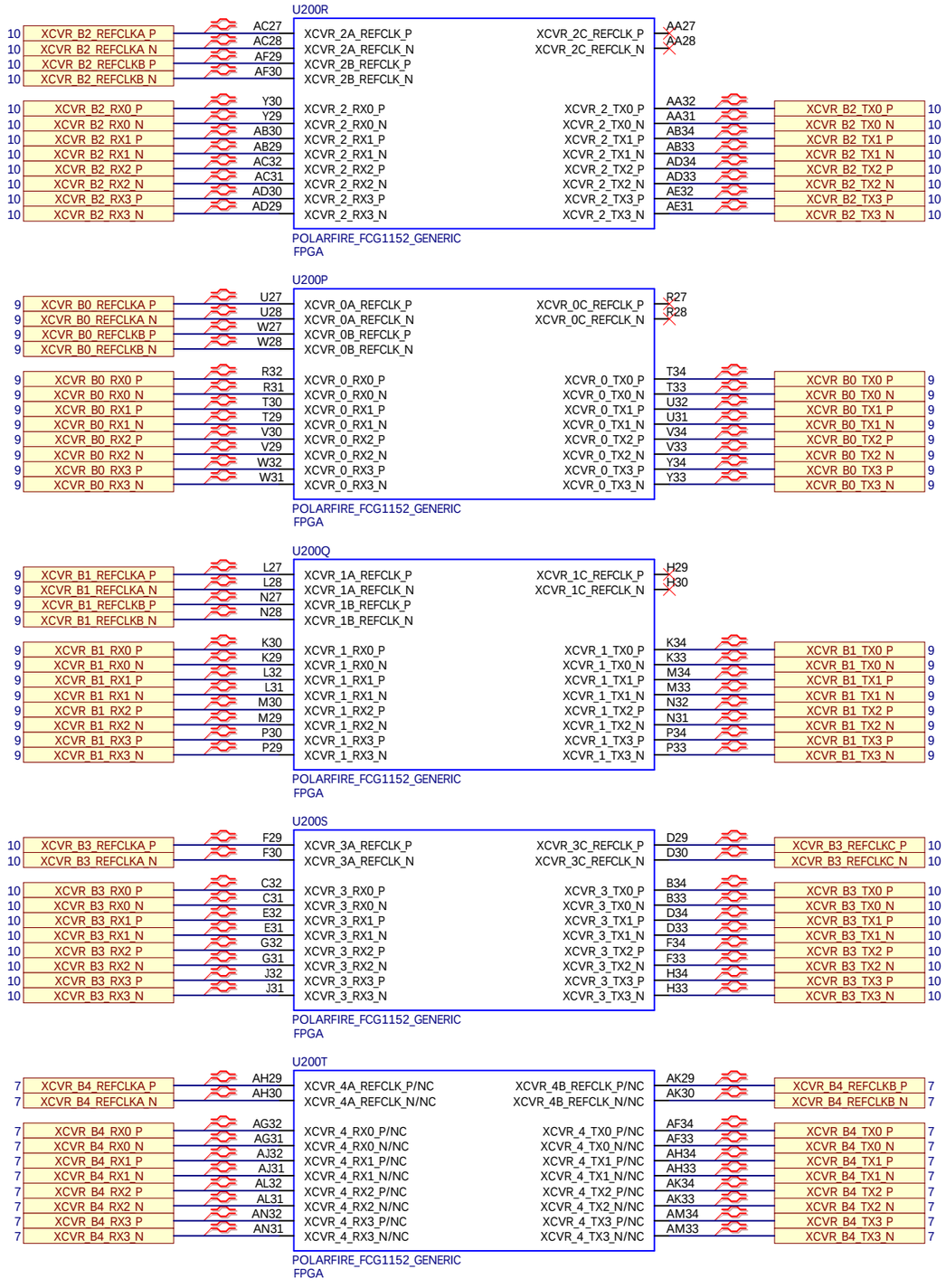

XCVR / IO Selection

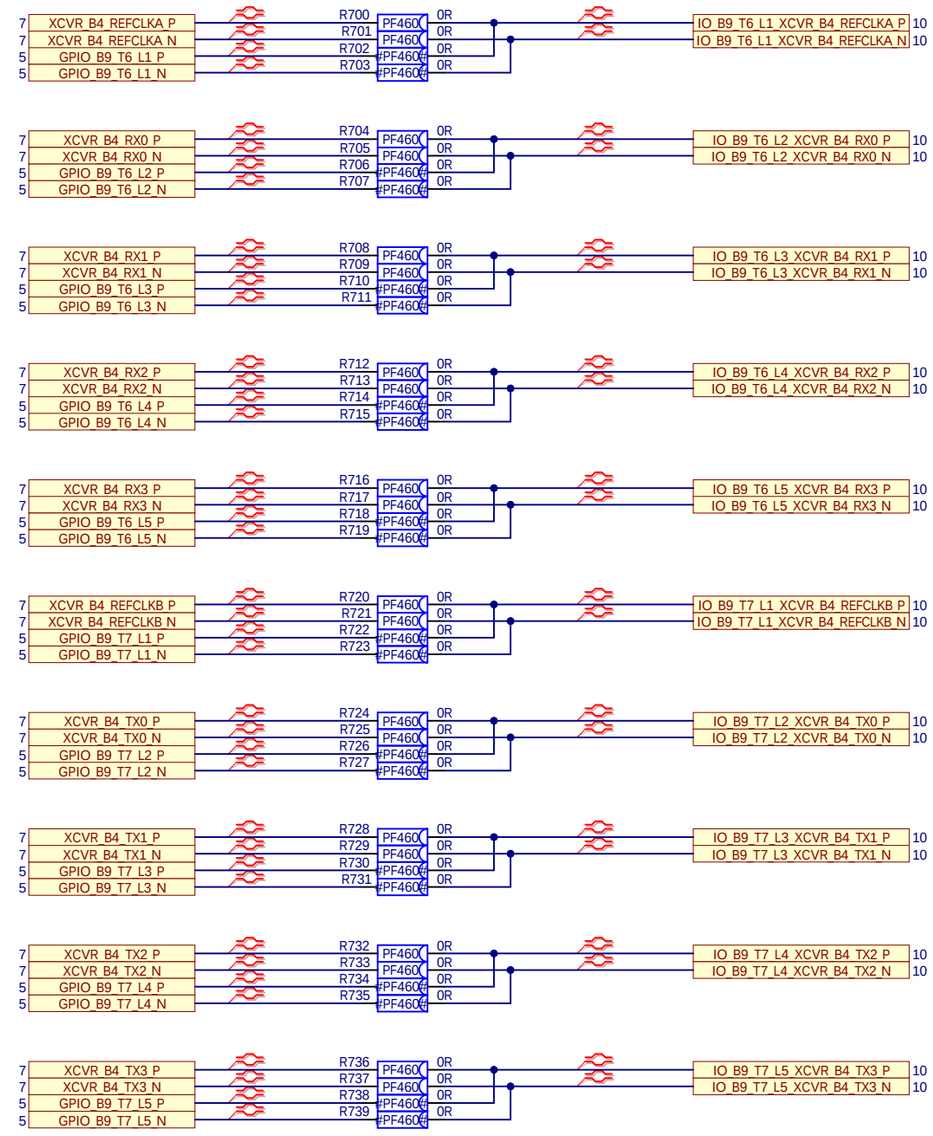

ENCLUSTRA FPGA SOLUTIONS	Project ME-MP1.PrjPcb	Sheet Name ME-MP1_P07_SOC_XCVR.SchDoc	Customer No 0000	Revision R1.0 V9	DNE = Do Not Equip	Confidential
	Company Enclustra GmbH	Copyright © 2023 by Enclustra GmbH Switzerland	Project No 487	Designed MHEI	Date 17 Jan 2023	Sheet/sheets 7 / 23

FPGA Power

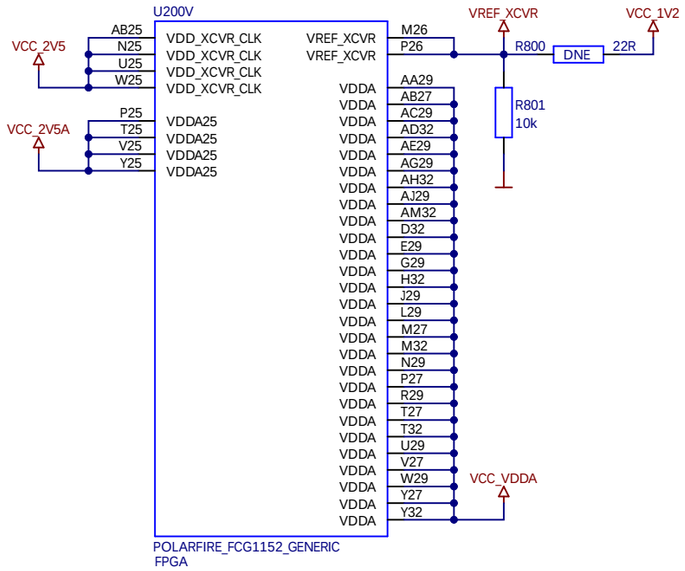

FPGA Power

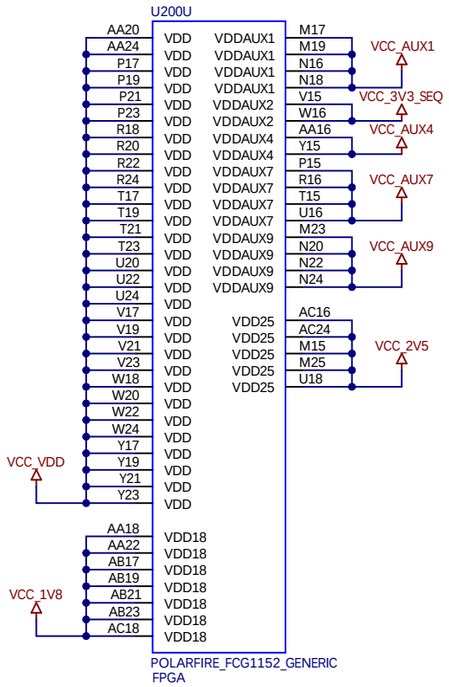

FPGA Ground

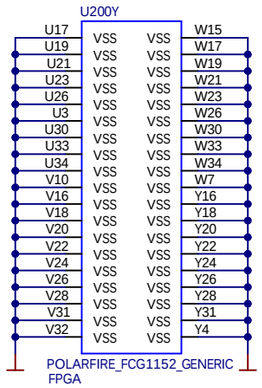

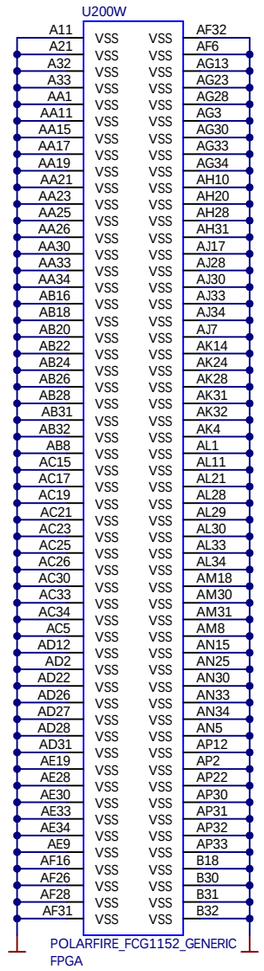

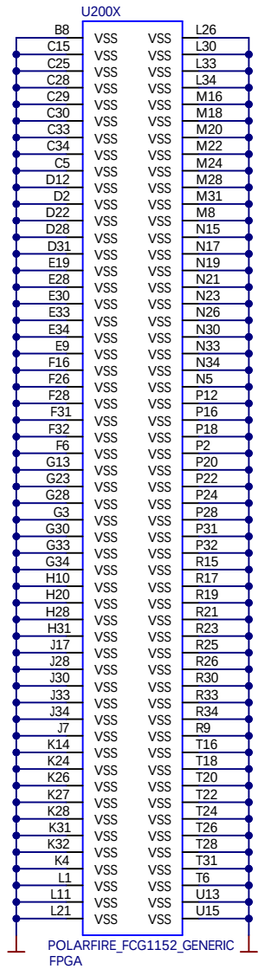

FPGA Decoupling

not included in user schematics

ENCLUSTRA FPGA SOLUTIONS	Project ME-MP1.PrjPcb	Sheet Name ME-MP1_P08_SOC_PWR.SchDoc	Customer No 0000	Revision R1.0 V9	DNE = Do Not Equip	Confidential
	Company Enclustra GmbH	Copyright © 2023 by Enclustra GmbH Switzerland	Project No 487	Designed MHEI	Date 17 Jan 2023	Sheet/sheets 8 / 23

Module Connector A

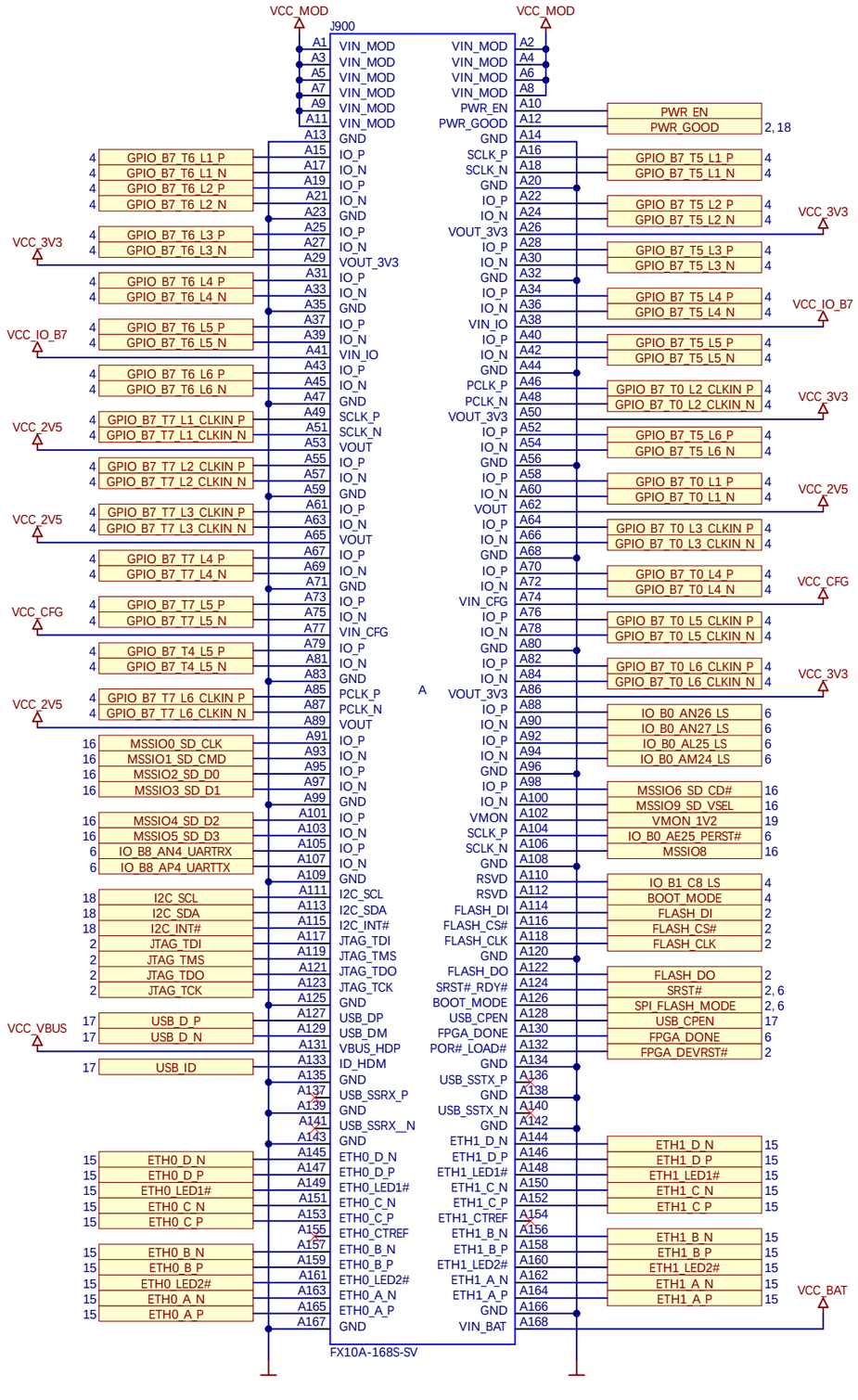

Module Connector B

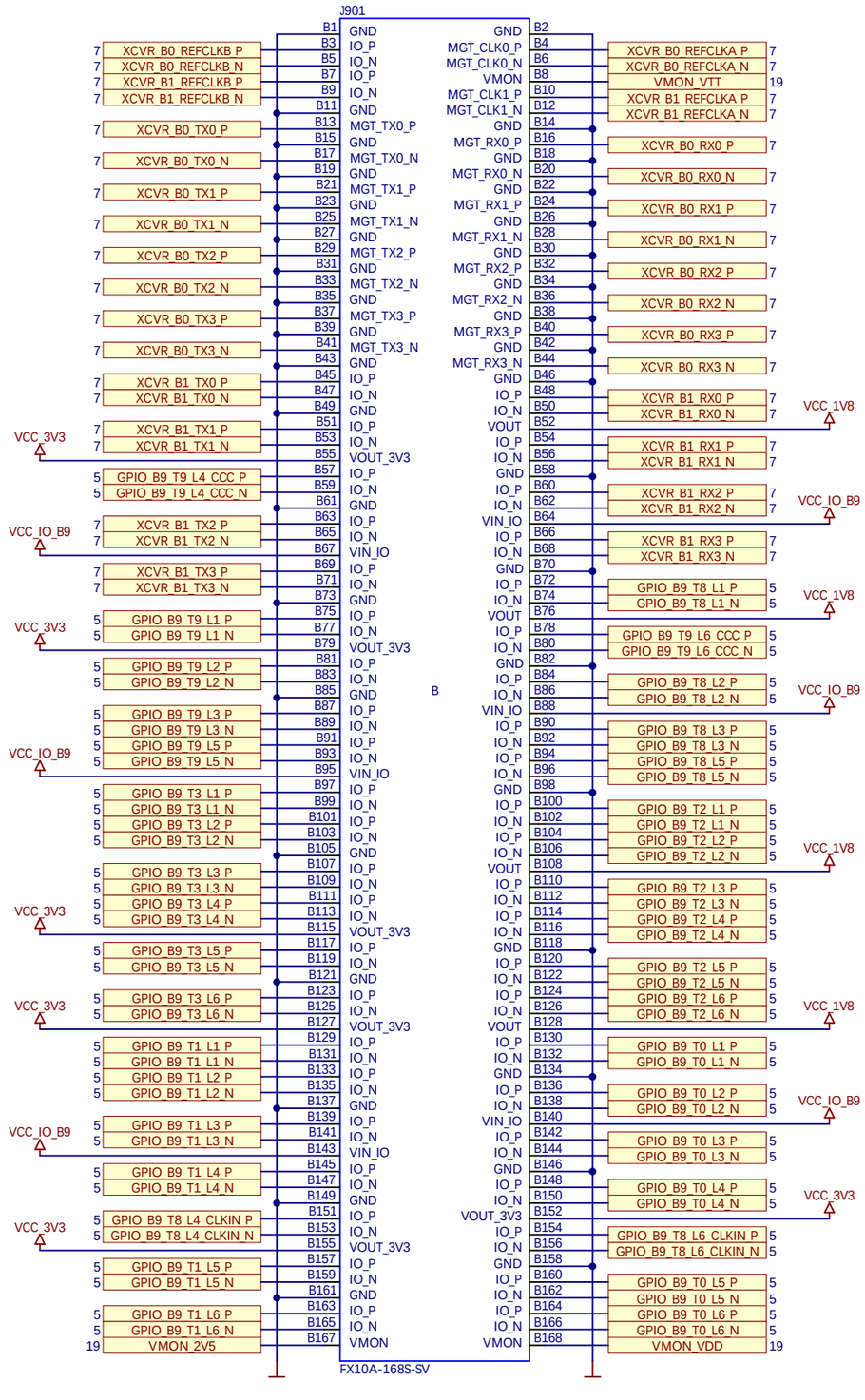

ENCLUSTRA FPGA SOLUTIONS	Project ME-MP1.PrjPcb	Sheet Name ME-MP1_P09_MOD_CON_A_B.SchDoc	Customer No 0000	Revision R1.0 V9	DNE = Do Not Equip	Confidential
	Company Enclustra GmbH	Copyright © 2023 by Enclustra GmbH Switzerland	Project No 487	Designed MHEI	Date 17 Jan 2023	Sheet/sheets 9 / 23

Module Connector C

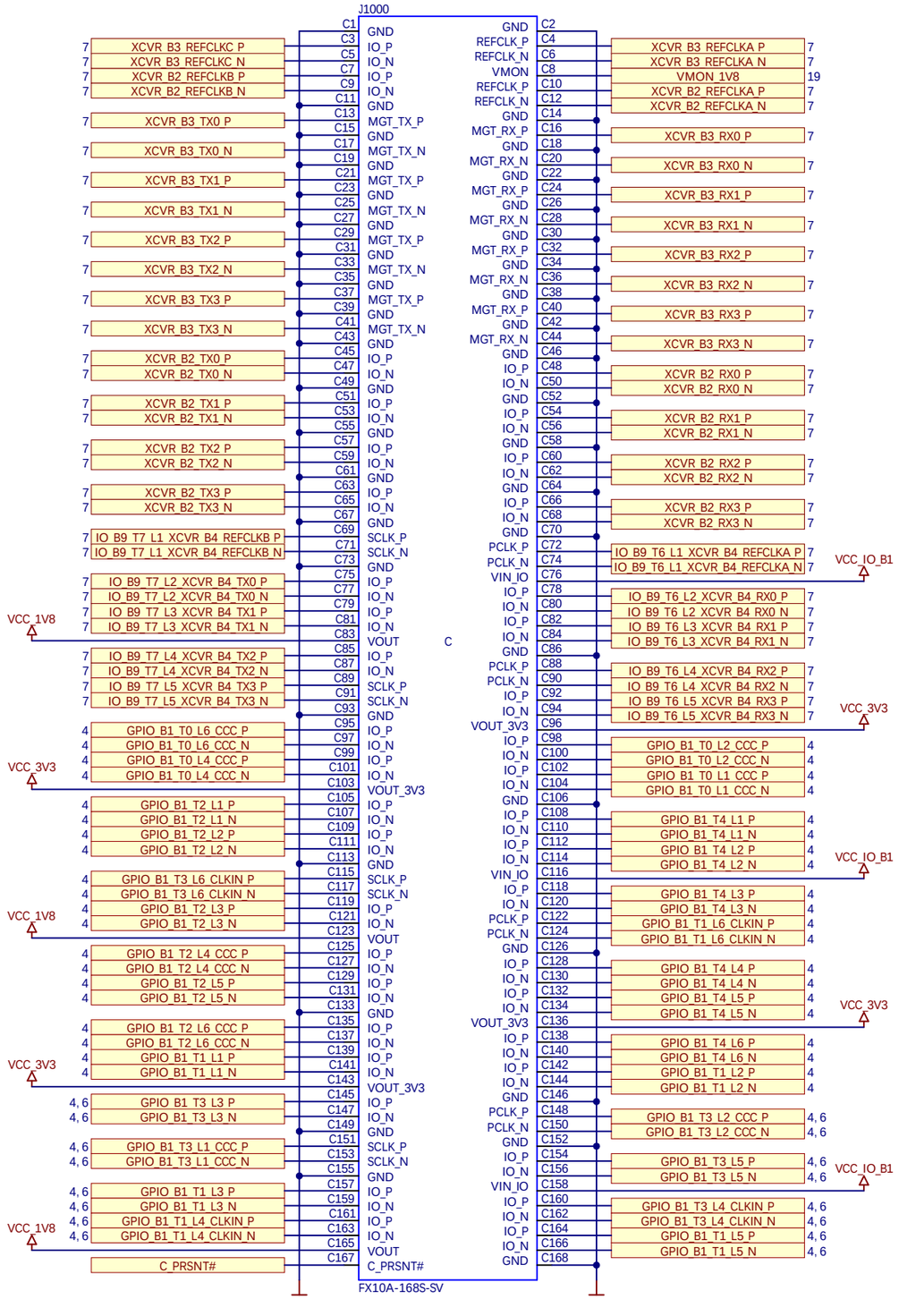

IO Voltage Generation

when C connector is not present on base board
not included in user schematics

ENCLUSTRA FPGA SOLUTIONS	Project ME-MP1.PrjPcb	Sheet Name ME-MP1_P10_MOD_CON_C.SchDoc	Customer No 0000	Revision R1.0 V9	DNE = Do Not Equip	Confidential
	Company Enclustra GmbH	Copyright © 2023 by Enclustra GmbH Switzerland	Project No 487	Designed MHEI	Date 17 Jan 2023	Sheet/sheets 10 / 23

MSS DDR4 SDRAM

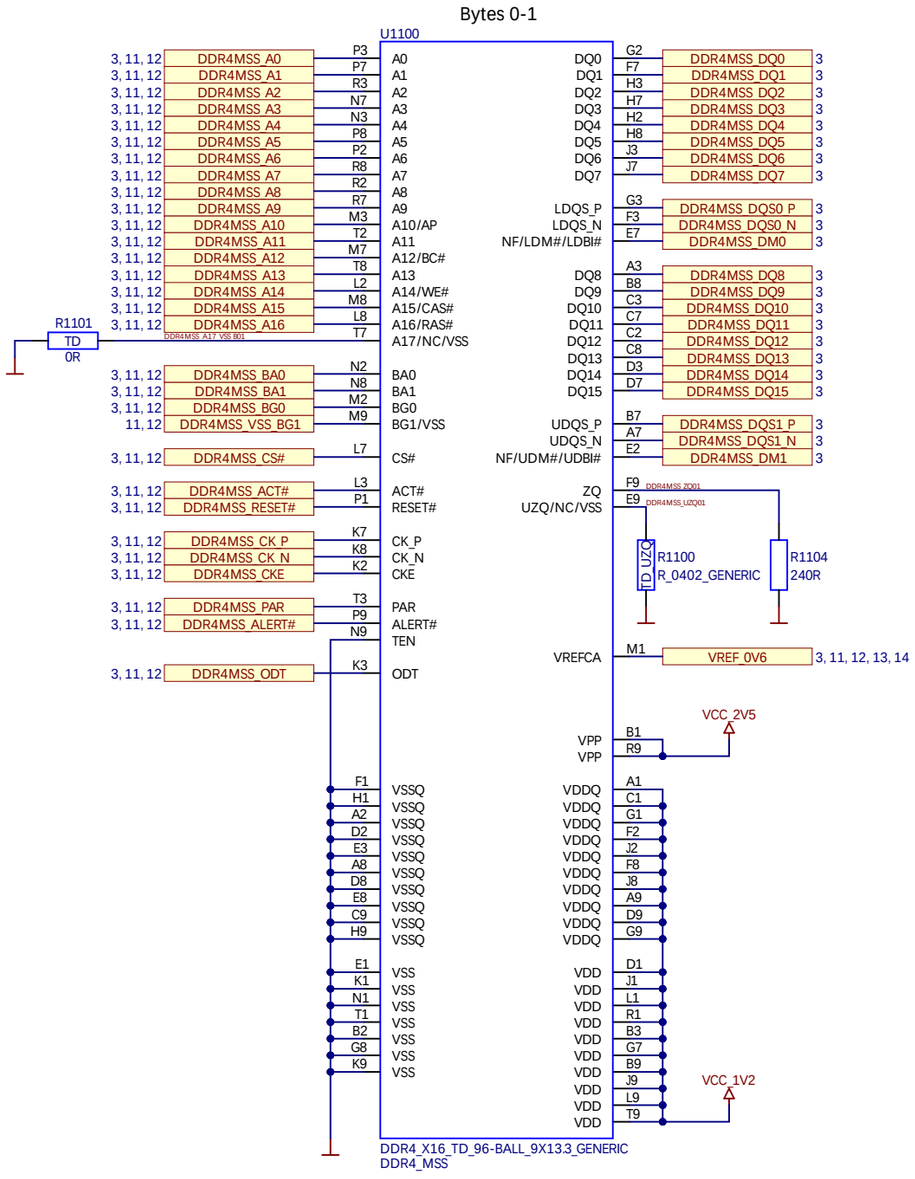

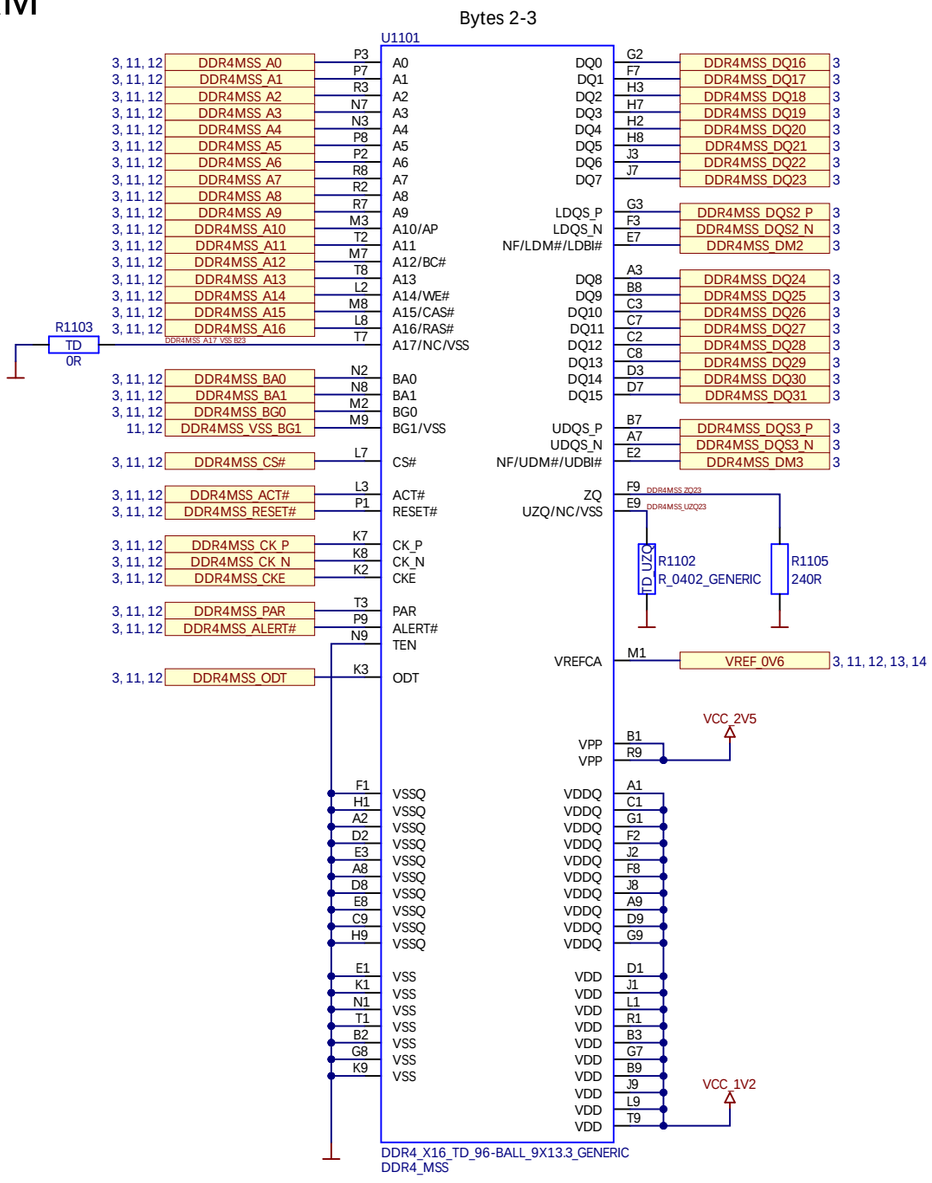

MSS DDR4 Termination

not included in user schematics

MSS DDR4 Misc

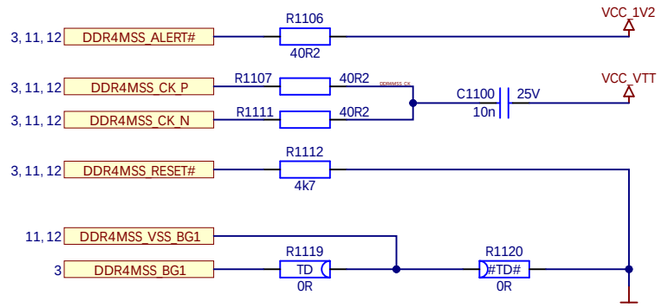

ENCLUSTRA FPGA SOLUTIONS	Project ME-MP1.PrjPcb	Sheet Name ME-MP1_P11_MSS_DDR4_SDRAM_0-3.SchDoc	Customer No 0000	Revision R1.0 V9	DNE = Do Not Equip	Confidential
	Company Enclustra GmbH	Copyright © 2023 by Enclustra GmbH Switzerland	Project No 487	Designed MHEI	Date 17 Jan 2023	Sheet/sheets 11 / 23

MSS DDR4 SDRAM

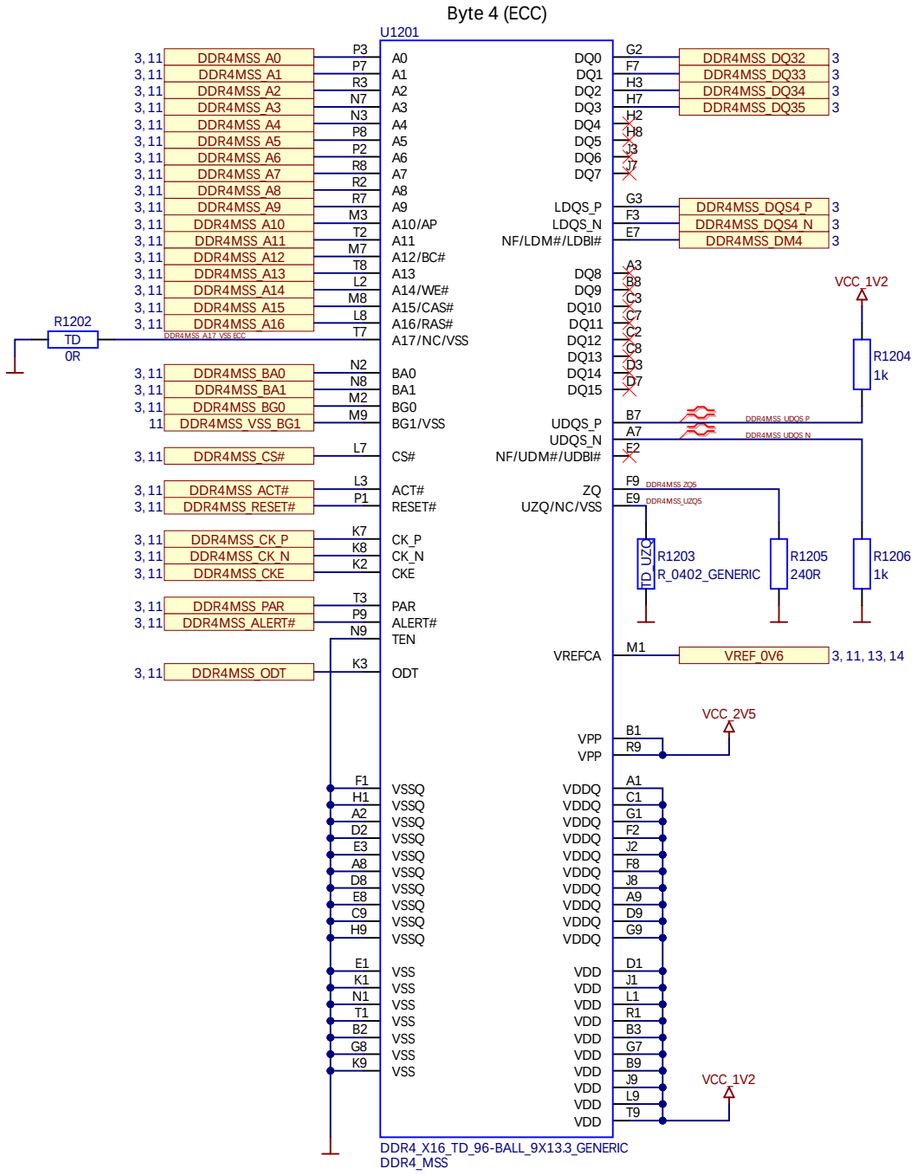

DDR4 Termination Voltage Regulator

not included in user schematics

MSS DDR4 Decoupling

not included in user schematics

ENCLUSTRA FPGA SOLUTIONS	Project ME-MP1.PrjPcb	Sheet Name ME-MP1_P12_MSS_DDR4_SDRAM_ECC.SchDoc	Customer No 0000	Revision R1.0 V9	DNE = Do Not Equip	Confidential
	Company Enclustra GmbH	Copyright © 2023 by Enclustra GmbH Switzerland	Project No 487	Designed MHEI	Date 17 Jan 2023	Sheet/sheets 12 / 23

FPGA DDR4 SDRAM

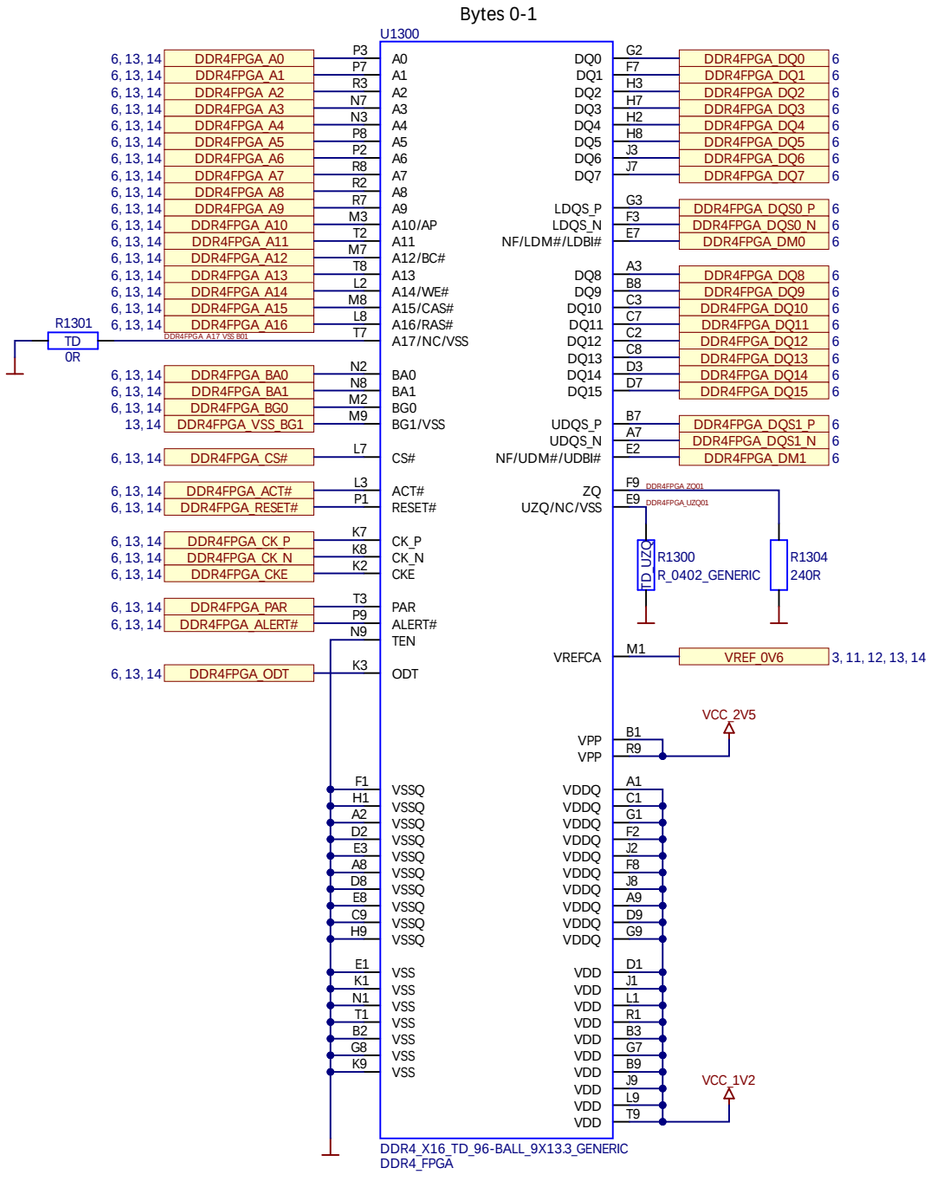

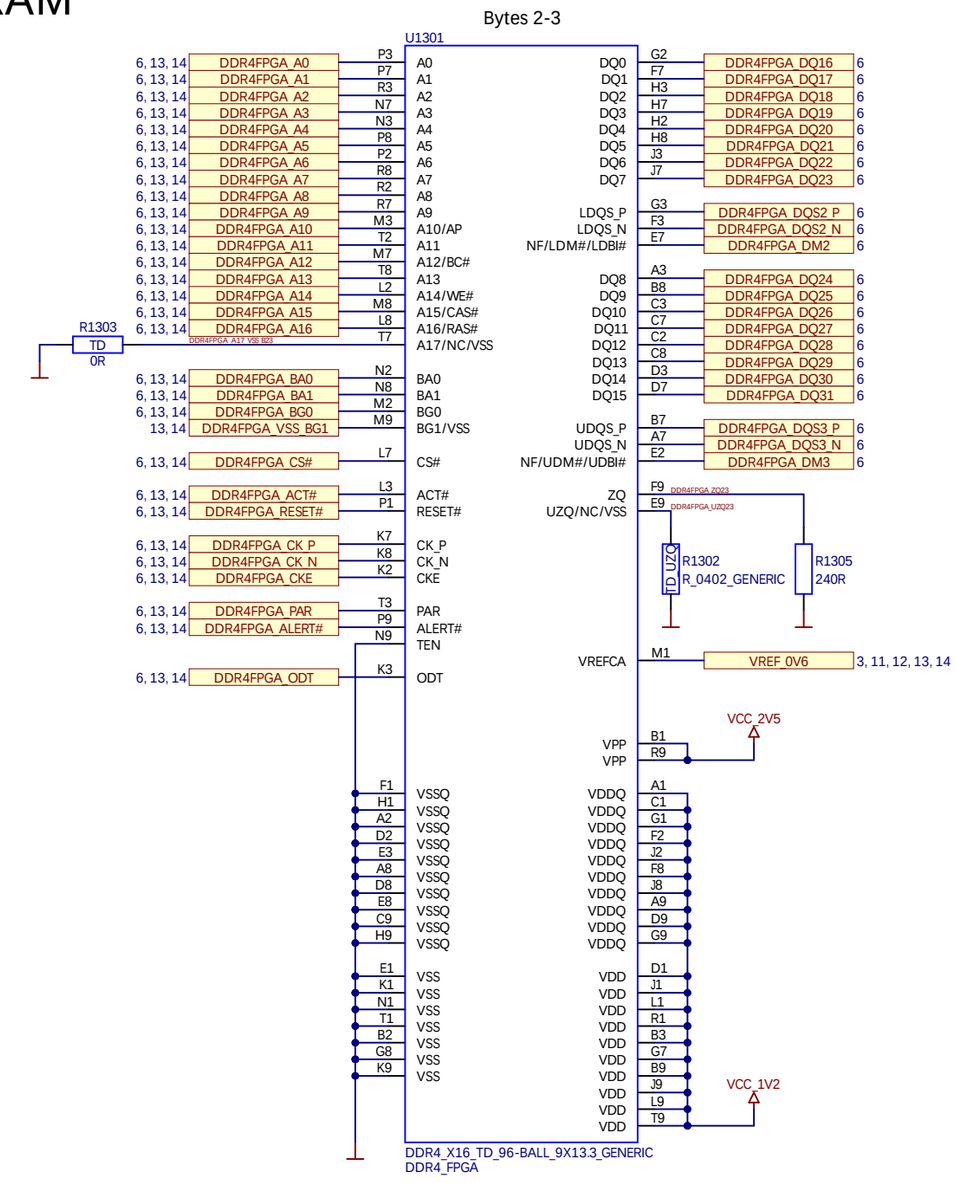

FPGA DDR4 Termination

not included in user schematics

FPGA DDR4 Misc

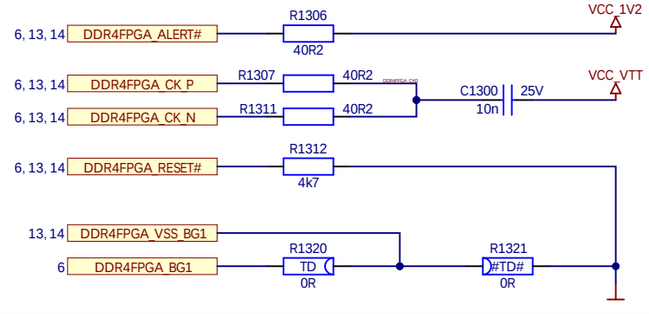

ENCLUSTRA FPGA SOLUTIONS	Project ME-MP1.PrjPcb	Sheet Name ME-MP1_P13_FPGA_DDR4_SDRAM_0-3.SchDoc	Customer No 0000	Revision R1.0 V9	DNE = Do Not Equip	Confidential
	Company Enclustra GmbH	Copyright © 2023 by Enclustra GmbH Switzerland	Project No 487	Designed MHEI	Date 17 Jan 2023	Sheet/sheets 13 / 23

FPGA DDR4 SDRAM

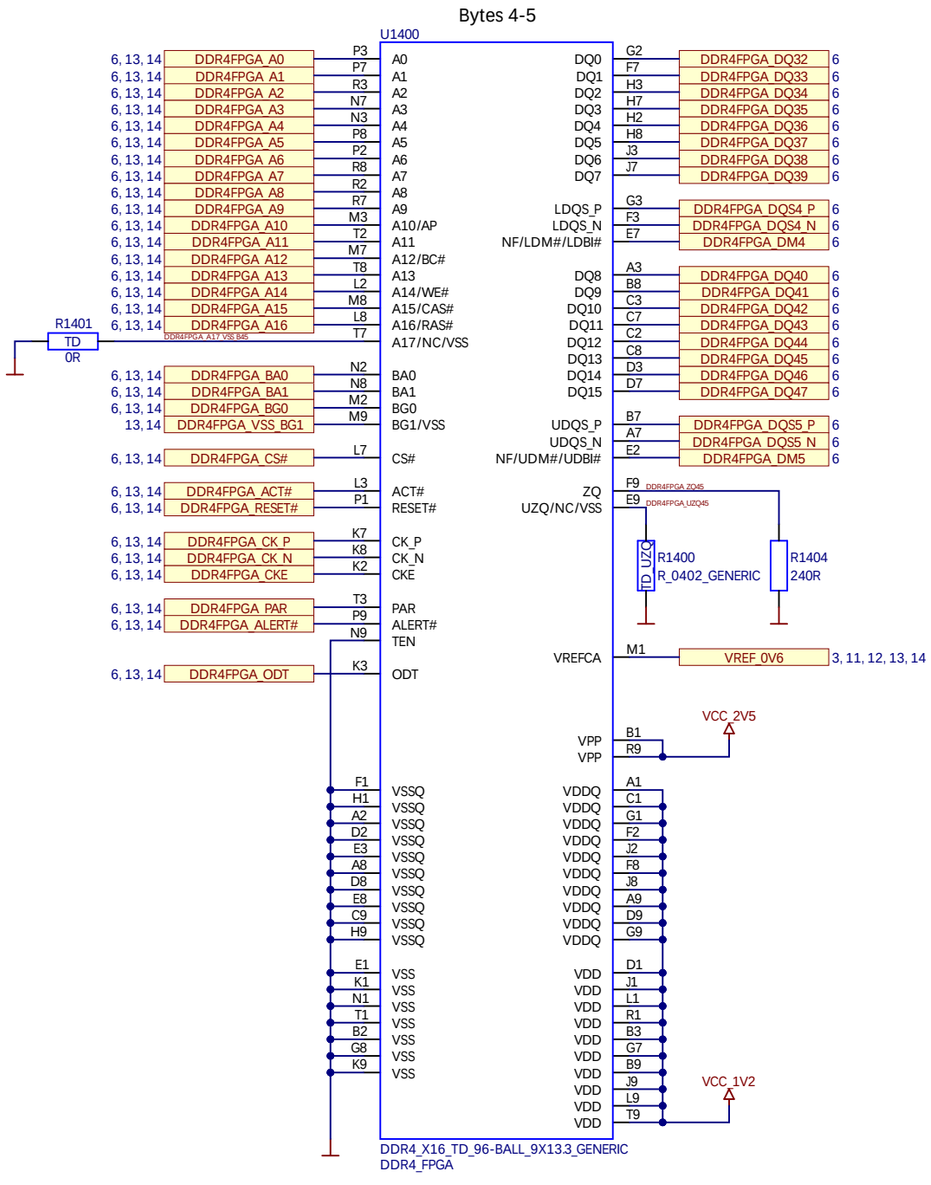

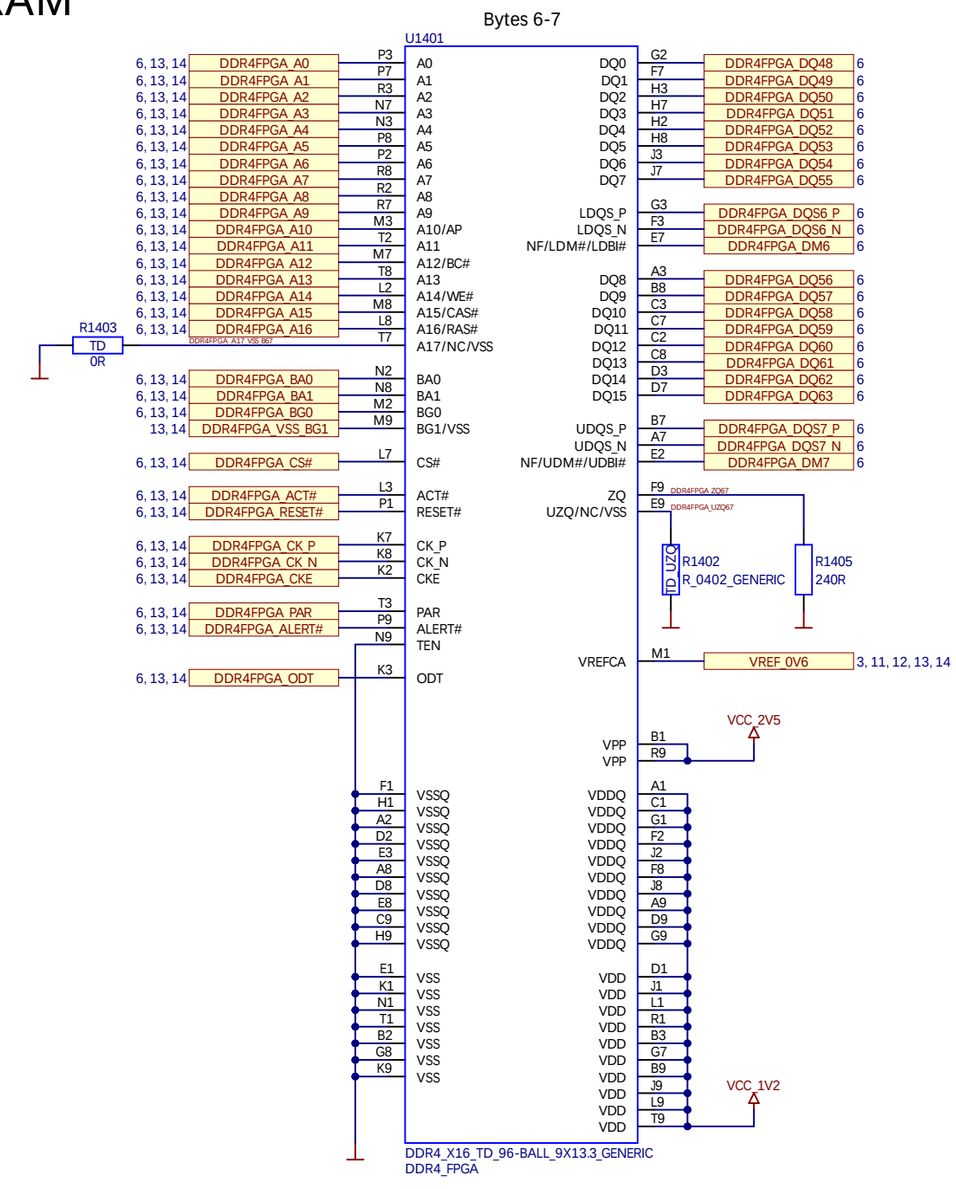

FPGA DDR4 Decoupling

not included in user schematics

ENCLUSTRA FPGA SOLUTIONS	Project ME-MP1.PrjPcb	Sheet Name ME-MP1_P14_FPGA_DDR4_SDRAM_4-7.SchDoc	Customer No 0000	Revision R1.0 V9	DNE = Do Not Equip	Confidential
	Company Enclustra GmbH	Copyright © 2023 by Enclustra GmbH Switzerland	Project No 487	Designed MHEI	Date 17 Jan 2023	Sheet/sheets 14 / 23

Gigabit Ethernet PHY 0

SGMII enabled, no mirroring
PhyAddress <3:0> = 0000 -> 0
LED_0 and LED_2 are active high

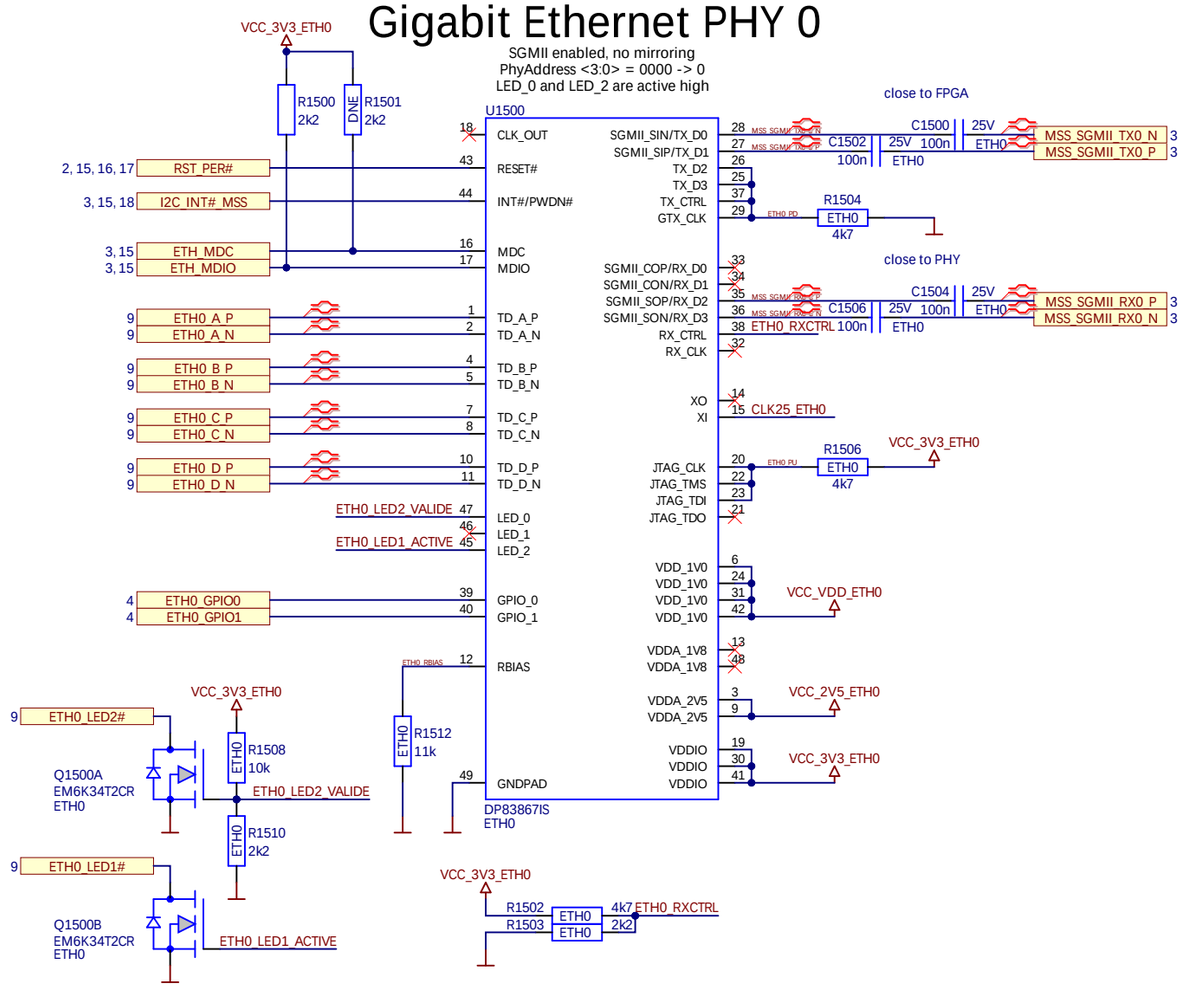

Gigabit Ethernet PHY 1

SGMII enabled, no mirroring
PhyAddress <3:0> = 0011 -> 3
LED_0 and LED_2 are active high

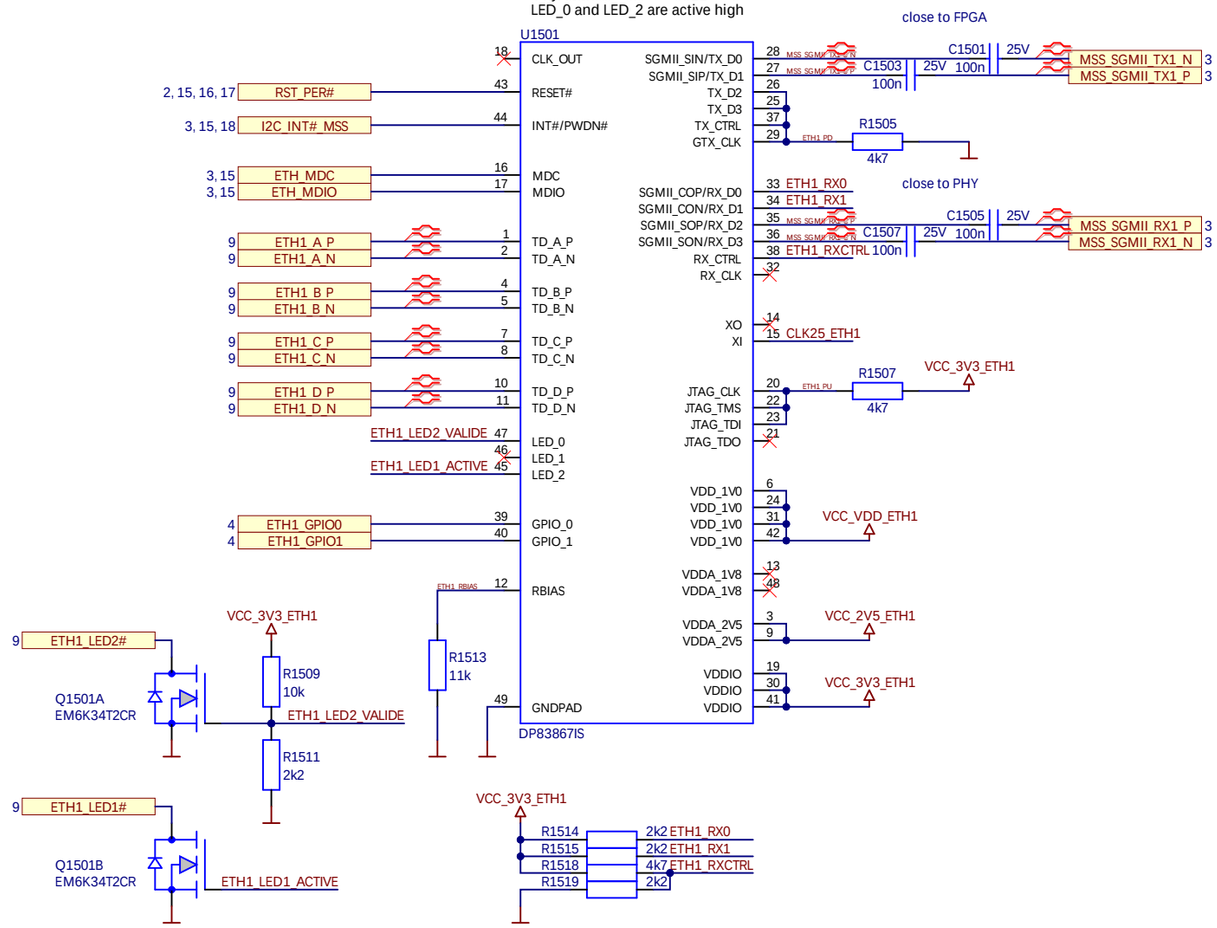

PHY 0 Power Filter

not included in user schematics

ETH 25 MHz Oscillator

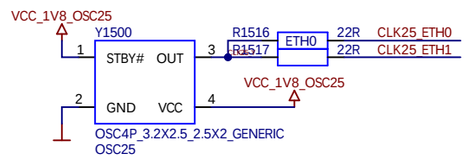

Oscillator Power Filter

not included in user schematics

PHY 1 Power Filter

not included in user schematics

ENCLUSTRA FPGA SOLUTIONS	Project ME-MP1.PrjPcb	Sheet Name ME-MP1_P15_ETHERNET_PHYS.SchDoc	Customer No 0000	Revision R1.0 V9	DNE = Do Not Equip	Confidential
	Company Enclustra GmbH	Copyright © 2023 by Enclustra GmbH Switzerland	Project No 487	Designed MHEI	Date 17 Jan 2023	Sheet/sheets 15 / 23

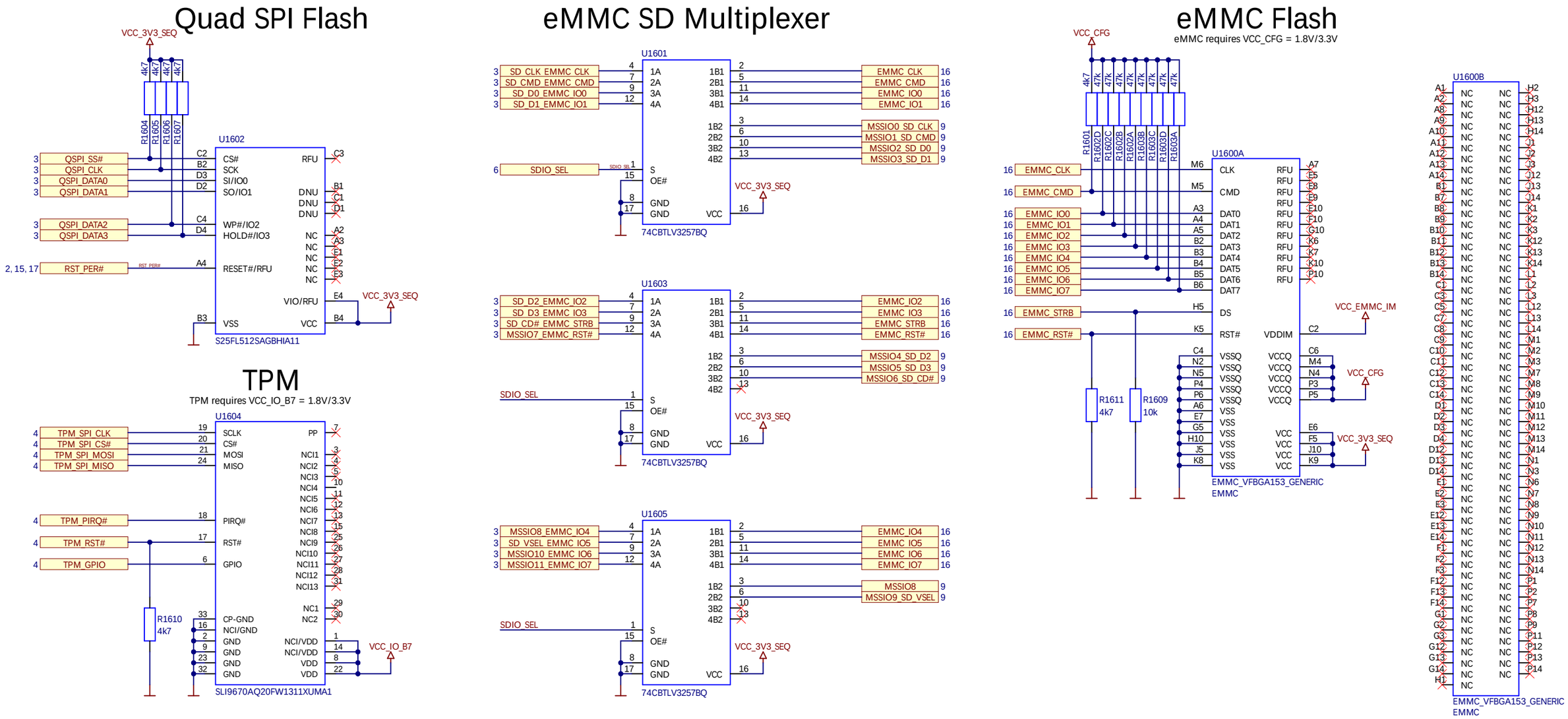

ENCLUSTRA FPGA SOLUTIONS	Project ME-MP1.PrjPcb	Sheet Name ME-MP1_P16_EMMC_TPM_QSPI_FLASH.SchDoc	Customer No 0000	Revision R1.0 V9	DNE = Do Not Equip	Confidential
	Company Enclustra GmbH	Copyright © 2023 by Enclustra GmbH Switzerland	Project No 487	Designed MHEI	Date 17 Jan 2023	Sheet/sheets 16 / 23

USB 2.0 Device/Host PHY

A-Device ID=GND, B-Device ID=Float

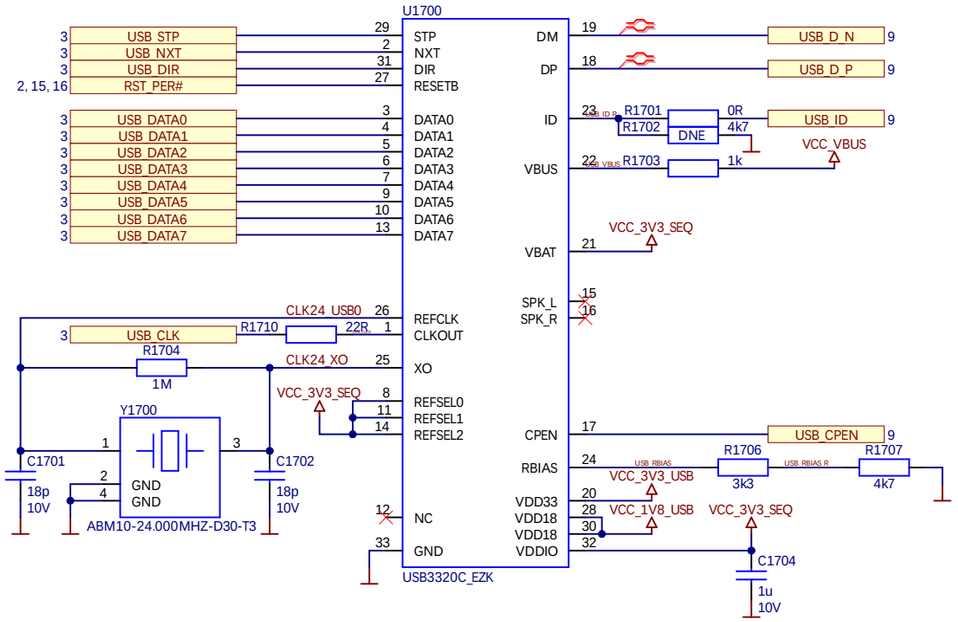

50 MHz Oscillator

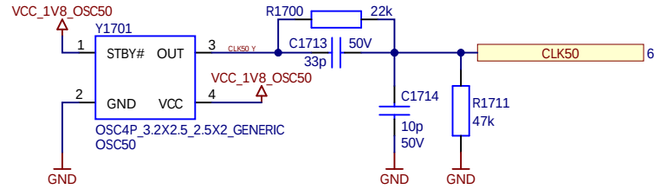

125 MHz Oscillator

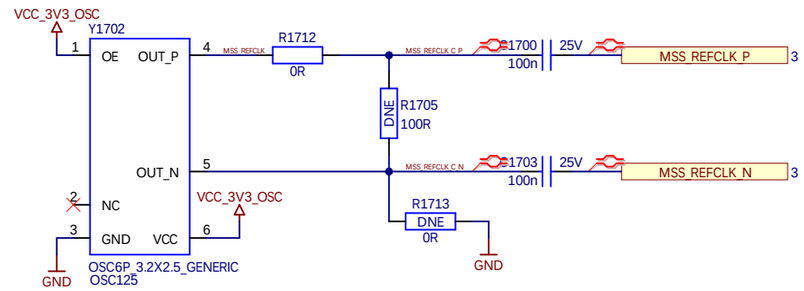

USB Power Filter

not included in user schematics

Oscillator Power Filter

not included in user schematics

ENCLUSTRA FPGA SOLUTIONS	Project ME-MP1.PrjPcb	Sheet Name ME-MP1_P17_USB2_PHY_OSCILLATORS.SchDoc	Customer No 0000	Revision R1.0 V9	DNE = Do Not Equip	Confidential
	Company Enclustra GmbH	Copyright © 2023 by Enclustra GmbH Switzerland	Project No 487	Designed MHEI	Date 17 Jan 2023	Sheet/sheets 17 / 23

Secure EEPROM

for Enclustra use only

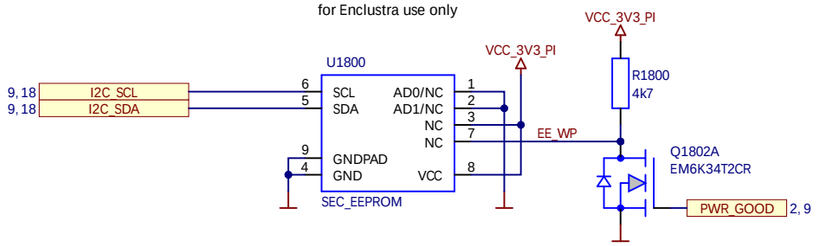

ATSHA204A-MAHDA-T I2C Address: 110 0100 Rw

24AA128T-I/MNY I2C Address: 101 0100 Rw

I2C Level Shifter

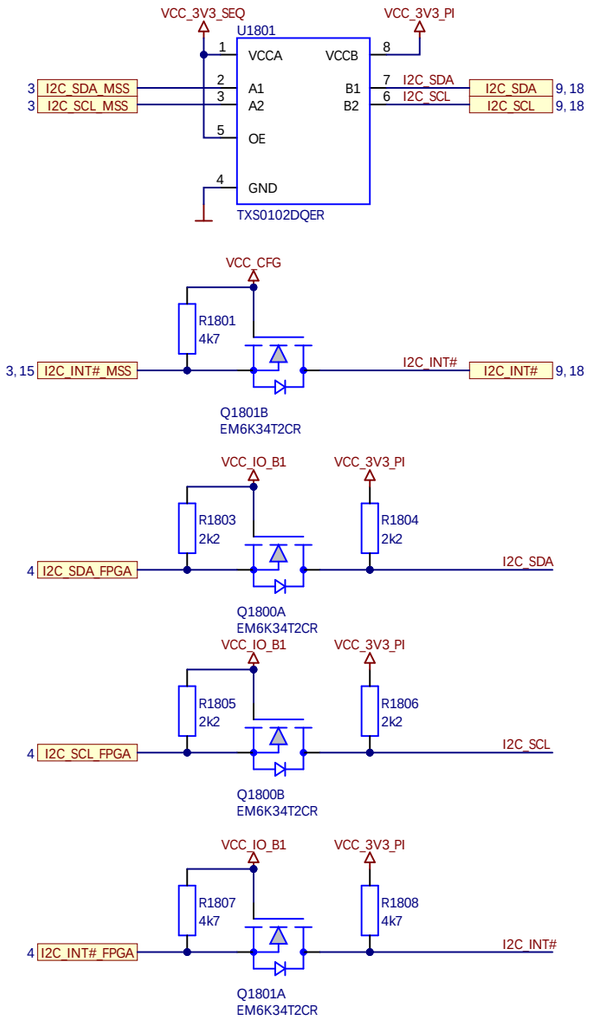

Real Time Clock

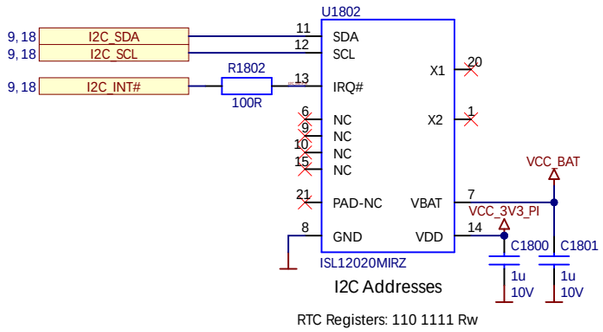

I2C Addresses

RTC Registers: 110 1111 Rw

User SRAM: 101 0111 Rw

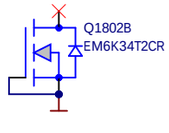

ENCLUSTRA FPGA SOLUTIONS	Project ME-MP1.PrjPcb	Sheet Name ME-MP1_P18_I2C_RTC_EEPROM.SchDoc	Customer No 0000	Revision R1.0 V9	DNE = Do Not Equip	Confidential
	Company Enclustra GmbH	Copyright © 2023 by Enclustra GmbH Switzerland	Project No 487	Designed MHEI	Date 17 Jan 2023	Sheet/sheets 18 / 23

Buck Converter 1.05V

1.05V 20A 3%
Fs = 780kHz Vfb = 0.5V
I2C-Address = 001 0001 Rw, PMBUS-Address = 100 0001 Rw
not included in user schematics

Supported Voltage Ranges

Power Rail	Direction	Range	Tolerance
VCC_MOD	input	5 - 13.2V	±5%
VCC_CFG[1]	input	1.8 - 3.3V	±5%
VCC_IO_B1	input	1.2 - 3.3V	±5%
VCC_IO_B7[2]	input	1.8 - 3.3V	±5%
VCC_IO_B9	input	1.2 - 3.3V	±5%
VCC_BAT	input	1.8 - 5.5V	-
VCC_1V8	output	1.8V	±5%
VCC_2V5	output	2.5V	±5%
VCC_3V3	output	3.3V	±5%

[1]eMMC does not work with VCC_CFG = 2.5V.
[2]TPM does not work with VCC_IO_B7 = 2.5V.

LDO 5.0V

5.0 V 0.05A 1%
not included in user schematics

FPGA Aux Power Selection

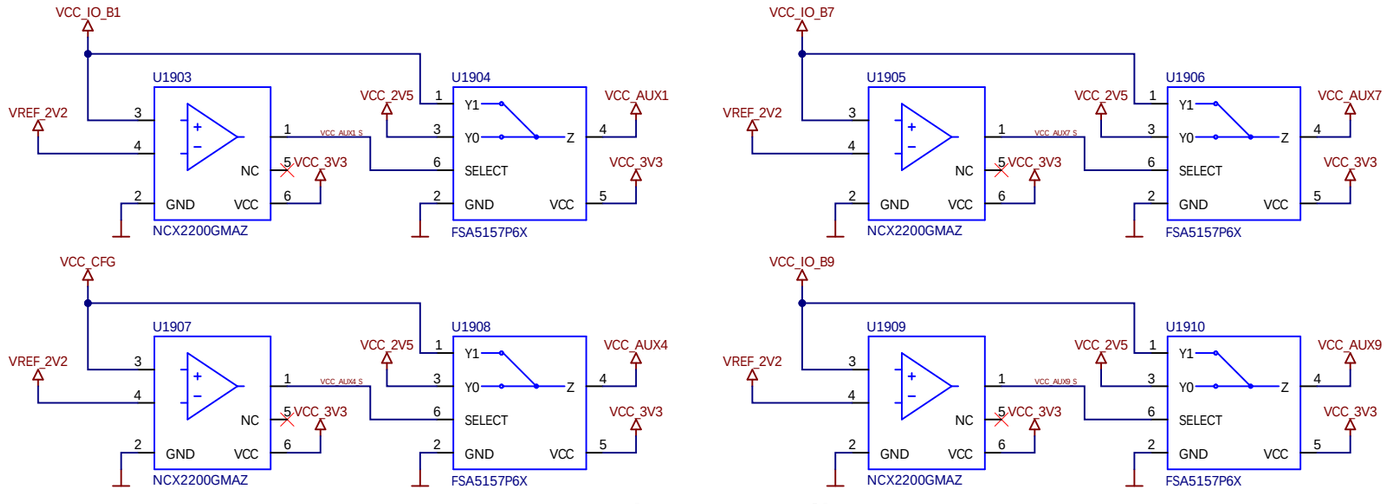

Power Converter Synchronization

not included in user schematics

Board Decoupling

not included in user schematics

Voltage Monitoring

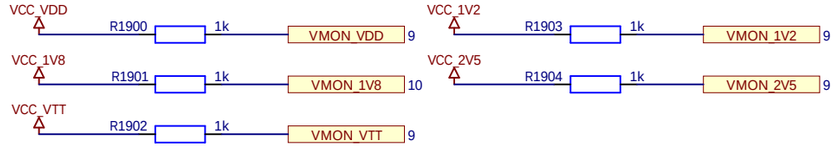

ENCLUSTRA FPGA SOLUTIONS	Project ME-MP1.PrjPcb	Sheet Name ME-MP1_P19_V_VDD_V-MONITORING.SchDoc	Customer No 0000	Revision R1.0 V9	DNE = Do Not Equip	Confidential
	Company Enclustra GmbH	Copyright 2023 by Enclustra GmbH Switzerland	Project No 487	Designed MHEI	Date 17 Jan 2023	Sheet/sheets 19 / 23

Quad Buck Converter

I2C-Address = 001 0111 Rw, PMBUS-Address = 100 0111 Rw
not included in user schematics

Power Input Filter

not included in user schematics

LDO 3.3V

3.3V 0.05A 1%
not included in user schematics

LDO 5.0V

5.0 V 0.05A 1%
not included in user schematics

Power Sequencing Load Switch

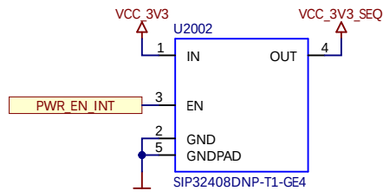

Power Sequencing

not included in user schematics

ENCLUSTRA FPGA SOLUTIONS	Project ME-MP1.PrjPcb	Sheet Name ME-MP1_P20_V_1.2_1.8_2.5_3.3.SchDoc	Customer No 0000	Revision R1.0 V9	DNE = Do Not Equip	Confidential
	Company Enclustra GmbH	Copyright © 2023 by Enclustra GmbH Switzerland	Project No 487	Designed MHEI	Date 17 Jan 2023	Sheet/sheets 20 / 23

Module Mounting Holes M3

Z2102

ME-MOUNTING-HOLES_74.0X54.0_4P

Texts and Logos

Z2100 ENCLUSTRA

Z2101 Mercury+ MP1

Z2103 RoHS

Z2104

Z2105 94V-0

Z2106 0000

Z2107 E888888

Z2108 WW / YY

Z2109 Pin-1 Mark Square 1mm

Z2110 Pin-1 Mark Square 1mm

SN Placeholder

Z2112

QR 5x5

PCB

M2100

ME-MP1-A

PCB Fiducials

Z2114 Z2115 Z2116

Z2117 Z2118 Z2119

ENCLUSTRA FPGA SOLUTIONS	Project ME-MP1.PrjPcb	Sheet Name ME-MP1_P21_MECHANICS.SchDoc	Customer No 0000	Revision R1.0 V9	DNE = Do Not Equip	Confidential
	Company Enclustra GmbH	Copyright 2023 by Enclustra GmbH Switzerland	Project No 487	Designed MHEI	Date 17 Jan 2023	Sheet/sheets 21 / 23

Component Options

FPGA	DDR4_MSS	DDR4_MSS_ECC	DDR4_FPGA	TD_UZQ	TD	ETH0	EMMC
Part U200A MPFS250T-FCG1152EES EN103354	Part U1100A K4A4G165WE-BIRC EN101868	Part U1201A K4A4G165WE-BIRC EN101868	Part U1300A K4A4G165WE-BIRC EN101868	Part R1100A 0R EN101361	R1118, R1119, R1319, R1320 R1101, R1103, R1202, R1301, R1303, R1401, R1403 or R1120, R1321	U1500 C1500, C1502, C1504, C1506, C1510-C1514, C1534-C1542, L1500, L1504 Q1500 R1502, R1503, R1504, R1506, R1508, R1510, R1512, R1516	Part U1600A EMMC16G-IB29-PZ90 EN102591
Part U200B MPFS250TS-FCG1152I EN103164	Part U1100B K4A8G165WB-BIRC EN101979	Part U1201B K4A8G165WB-BIRC EN101979	Part U1300B K4A8G165WB-BIRC EN101979	Part R1100B 240R EN101382		or DNE	Part U1600B FEMDRW016G-88A43 EN104303
Part U200C MPFS460TS-1FCG1152I EN103138	Part U1100C AS4C512M16D4-75BIN EN104035	Part U1201C AS4C512M16D4-75BIN EN104035	Part U1300C AS4C512M16D4-75BIN EN104035	Part R1102A 0R EN101361			
Part U200D MPFS250TS-FCG1152IPP EN104264	Part U1100D H5ANAG6NCMR-XNI EN103239	Part U1201D H5ANAG6NCMR-XNI EN103239	Part U1300D H5ANAG6NCMR-XNI EN103239	Part R1102B 240R EN101382			
	Part U1101A K4A4G165WE-BIRC EN101868		Part U1301A K4A4G165WE-BIRC EN101868	Part R1203A 0R EN101361			
	Part U1101B K4A8G165WB-BIRC EN101979		Part U1301B K4A8G165WB-BIRC EN101979	Part R1203B 240R EN101382			
	Part U1101C AS4C512M16D4-75BIN EN104035		Part U1301C AS4C512M16D4-75BIN EN104035	Part R1300A 0R EN101361			
	Part U1101D H5ANAG6NCMR-XNI EN103239		Part U1301D H5ANAG6NCMR-XNI EN103239	Part R1300B 240R EN101382			
				0R for normal, 240R for TD	DNE for normal, assembled for TD		

			Part U1400A K4A4G165WE-BIRC EN101868	Part R1302A 0R EN101361			
			Part U1400B K4A8G165WB-BIRC EN101979	Part R1302B 240R EN101382			
			Part U1400C AS4C512M16D4-75BIN EN104035	Part R1400A 0R EN101361			
			Part U1400D H5ANAG6NCMR-XNI EN103239	Part R1400B 240R EN101382			
			Part U1401A K4A4G165WE-BIRC EN101868	Part R1402A 0R EN101361			
			Part U1401B K4A8G165WB-BIRC EN101979	Part R1402B 240R EN101382			
			Part U1401C AS4C512M16D4-75BIN EN104035				
			Part U1401D H5ANAG6NCMR-XNI EN103239				

Component Assembly

Enclustra Product	FPGA	DDR4_MSS	DDR4_MSS_ECC	DDR4_FPGA	TD_UZQ	TD	ETH0	EMMC
Variant EN104233:0 ME-MP1-250-EES-D3E-R1.0	Option EN104233:1 FPGA EN103354	Option EN104233:2 DDR4_MSS EN104035	Option EN104233:3 DDR4_MSS_ECC EN104035	Option EN104233:4 DDR4_FPGA EN104035	Option EN104233:5 TD_UZQ EN101361	Option EN104233:6 TD DNE	Option EN104233:17 ETH0	Option EN104233:7 EMMC EN104303
Variant EN104234:0 ME-MP1-250-SI-D3EN-R1.0	Option EN104234:1 FPGA EN103164	Option EN104234:2 DDR4_MSS EN104035	Option EN104234:3 DDR4_MSS_ECC EN104035	Option EN104234:4 DDR4_FPGA DNE	Option EN104234:5 TD_UZQ EN101361	Option EN104234:6 TD DNE	Option EN104234:17 ETH0	Option EN104234:7 EMMC EN104303
Variant EN104374:0 ME-MP1-250-SIPP-D3EN-R1.0	Option EN104374:1 FPGA EN104264	Option EN104374:2 DDR4_MSS EN104035	Option EN104374:3 DDR4_MSS_ECC EN104035	Option EN104374:4 DDR4_FPGA DNE	Option EN104374:5 TD_UZQ EN101361	Option EN104374:6 TD DNE	Option EN104374:17 ETH0	Option EN104374:7 EMMC EN104303
Variant EN104235:0 ME-MP1-460-1SI-D4E-R1.0	Option EN104235:1 FPGA EN103138	Option EN104235:2 DDR4_MSS EN103239	Option EN104235:3 DDR4_MSS_ECC EN103239	Option EN104235:4 DDR4_FPGA EN103239	Option EN104235:5 TD_UZQ EN101382	Option EN104235:6 TD	Option EN104235:17 ETH0	Option EN104235:7 EMMC EN104303
Variant EN105248:0 ME-MP1-250-EES-D3E-E1-R1.0	Option EN105248:1 FPGA EN103354	Option EN105248:2 DDR4_MSS EN104035	Option EN105248:3 DDR4_MSS_ECC EN104035	Option EN105248:4 DDR4_FPGA EN104035	Option EN105248:5 TD_UZQ EN101361	Option EN105248:6 TD DNE	Option EN105248:17 ETH0 DNE	Option EN105248:7 EMMC EN104303
Variant EN105249:0 ME-MP1-250-SI-D3EN-E1-R1.0	Option EN105249:1 FPGA EN103164	Option EN105249:2 DDR4_MSS EN104035	Option EN105249:3 DDR4_MSS_ECC EN104035	Option EN105249:4 DDR4_FPGA DNE	Option EN105249:5 TD_UZQ EN101361	Option EN105249:6 TD DNE	Option EN105249:17 ETH0 DNE	Option EN105249:7 EMMC EN104303
Variant EN105250:0 ME-MP1-250-SIPP-D3EN-E1-R1.0	Option EN105250:1 FPGA EN104264	Option EN105250:2 DDR4_MSS EN104035	Option EN105250:3 DDR4_MSS_ECC EN104035	Option EN105250:4 DDR4_FPGA DNE	Option EN105250:5 TD_UZQ EN101361	Option EN105250:6 TD DNE	Option EN105250:17 ETH0 DNE	Option EN105250:7 EMMC EN104303
Variant EN105251:0 ME-MP1-460-1SI-D4E-E1-R1.0	Option EN105251:1 FPGA EN103138	Option EN105251:2 DDR4_MSS EN103239	Option EN105251:3 DDR4_MSS_ECC EN103239	Option EN105251:4 DDR4_FPGA EN103239	Option EN105251:5 TD_UZQ EN101382	Option EN105251:6 TD	Option EN105251:17 ETH0 DNE	Option EN105251:7 EMMC EN104303

Component Options

SEC_EEPROM	PF460	OSC25	OSC50	OSC125	L_VDD	L1U5 (4A)	L3U3 (2A)	L2U2 (4A)
Part U1800A ATSHA204A-MAHDA-T EN100827 Part U1800B 24AA128T-I/MNY EN100278	R610, R611, R614, R615, R618, R619 R700, R701, R704, R705, R708, R709, R712, R713, R716, R717 R720, R721, R724, R725, R728 R729, R732, R733, R736, R737 or R702, R703, R706, R707, R710, R711, R714, R715, R718, R719 R722, R723, R726, R727, R730 R731, R734, R735, R738, R739 DNE for 250 device, assembled for 460 device	Part Y1500A ASDMB-25.000MHZ-LC-T EN101588 Part Y1500B ASEMB_25.000MHZ-LC-T EN101589 Part Y1500C OT322525MJBA4SL EN104201	Part Y1701A ASDMB-50.000MHZ-LC-T EN100918 Part Y1701B ASEMB_50.000MHZ-LC-T EN100288 Part Y1701C DSC1001DI1-050.0000 EN104231	Part Y1702A DSC1123CI2-125.0000 EN101244 Part Y1702B DSC1123CI5-125.0000 EN104243	Part L1900A 0u1 EN102190 Part L1900B 220n EN102189	Part L2002A 1u5 EN103136 Part L2002B 1u5 EN103133 Part L2002C 1u5 EN103131	Part L2000A 3u3 EN103135 Part L2000B 3u3 EN103134 Part L2000C 3u3 EN103132 Part L2001A 3u3 EN103135 Part L2001B 3u3 EN103134 Part L2001C 3u3 EN103132	Part L2003A 2u2 EN102185 Part L2003B 2u2 EN103281

Component Assembly

SEC_EEPROM	PF460	OSC25	OSC50	OSC125	L_VDD	L1U5	L3U3	L2U2
Option EN104233:8 SEC_EEPROM EN100827	Option EN104233:9 PF460 DNE	Option EN104233:10 OSC25 EN104201	Option EN104233:11 OSC50 EN100288	Option EN104233:12 OSC125 EN101244	Option EN104233:13 L_VDD EN102189	Option EN104233:14 L1U5 EN103136	Option EN104233:15 L3U3 EN103135	Option EN104233:16 L2U2 EN102185
Option EN104234:8 SEC_EEPROM EN100827	Option EN104234:9 PF460 DNE	Option EN104234:10 OSC25 EN104201	Option EN104234:11 OSC50 EN100288	Option EN104234:12 OSC125 EN101244	Option EN104234:13 L_VDD EN102189	Option EN104234:14 L1U5 EN103136	Option EN104234:15 L3U3 EN103135	Option EN104234:16 L2U2 EN102185
Option EN104374:8 SEC_EEPROM EN100827	Option EN104374:9 PF460 DNE	Option EN104374:10 OSC25 EN104201	Option EN104374:11 OSC50 EN100288	Option EN104374:12 OSC125 EN101244	Option EN104374:13 L_VDD EN102189	Option EN104374:14 L1U5 EN103136	Option EN104374:15 L3U3 EN103135	Option EN104374:16 L2U2 EN102185
Option EN104235:8 SEC_EEPROM EN100827	Option EN104235:9 PF460	Option EN104235:10 OSC25 EN104201	Option EN104235:11 OSC50 EN100288	Option EN104235:12 OSC125 EN101244	Option EN104235:13 L_VDD EN102189	Option EN104235:14 L1U5 EN103136	Option EN104235:15 L3U3 EN103135	Option EN104235:16 L2U2 EN102185
Option EN105248:8 SEC_EEPROM EN100827	Option EN105248:9 PF460 DNE	Option EN105248:10 OSC25 EN104201	Option EN105248:11 OSC50 EN100288	Option EN105248:12 OSC125 EN101244	Option EN105248:13 L_VDD EN102189	Option EN105248:14 L1U5 EN103136	Option EN105248:15 L3U3 EN103135	Option EN105248:16 L2U2 EN102185
Option EN105249:8 SEC_EEPROM EN100827	Option EN105249:9 PF460 DNE	Option EN105249:10 OSC25 EN104201	Option EN105249:11 OSC50 EN100288	Option EN105249:12 OSC125 EN101244	Option EN105249:13 L_VDD EN102189	Option EN105249:14 L1U5 EN103136	Option EN105249:15 L3U3 EN103135	Option EN105249:16 L2U2 EN102185
Option EN105250:8 SEC_EEPROM EN100827	Option EN105250:9 PF460 DNE	Option EN105250:10 OSC25 EN104201	Option EN105250:11 OSC50 EN100288	Option EN105250:12 OSC125 EN101244	Option EN105250:13 L_VDD EN102189	Option EN105250:14 L1U5 EN103136	Option EN105250:15 L3U3 EN103135	Option EN105250:16 L2U2 EN102185
Option EN105251:8 SEC_EEPROM EN100827	Option EN105251:9 PF460	Option EN105251:10 OSC25 EN104201	Option EN105251:11 OSC50 EN100288	Option EN105251:12 OSC125 EN101244	Option EN105251:13 L_VDD EN102189	Option EN105251:14 L1U5 EN103136	Option EN105251:15 L3U3 EN103135	Option EN105251:16 L2U2 EN102185