Enclustra User Schematics

# Mercury SA1 Revision 3.0

## Disclaimer

User schematics do not include proprietary Enclustra design elements, such as power supply circuits.
These circuits use optimized designs which are extremely compact and remain proprietary to Enclustra.
The user manual provides all necessary information to use the module and its interfaces.

User schematics are provided after purchase of Enclustra hardware, and may also be provided in certain cases before purchase, to assist in product evaluation.
No part of the schematics may be copied or modified without written permission from Enclustra.

Full schematics, including a full bill-of-materials, may be available through the purchase of a hardware licence for the product in question.
Please contact Enclustra Sales for more information.

Note: DNE = Do Not Equip (parts not equipped by default)

© Enclustra GmbH

# Mercury SA1

## Revision 3.0


Sheet 1: Cover
Sheet 2: FPGA Configuration
Sheet 3: FPGA Banks L0/L1/3A/3B
Sheet 4: FPGA Banks 4/5/8 / User LEDs
Sheet 5: FPGA Banks 6/7 (HPS)
Sheet 6: FPGA Power
Sheet 7: Module Connectors
Sheet 8: DDR3L SDRAM Bytes 0-1
Sheet 9: DDR3L SDRAM Bytes 2-3
Sheet 10: Flash / JTAG / Clock / EMMC
Sheet 11: Gigabit Ethernet PHY
Sheet 12: USB 2.0 PHY / Real-time Clock / Secure EEPROMs
Sheet 13: Power 3.3V / 1.1V
Sheet 14: Power 1.35V / 1.2V
Sheet 15: Power 2.5V / 1.8V
Sheet 16: Power VTT / Pre-Driver
Sheet 17: Mechanics

# Boot Mode Selection

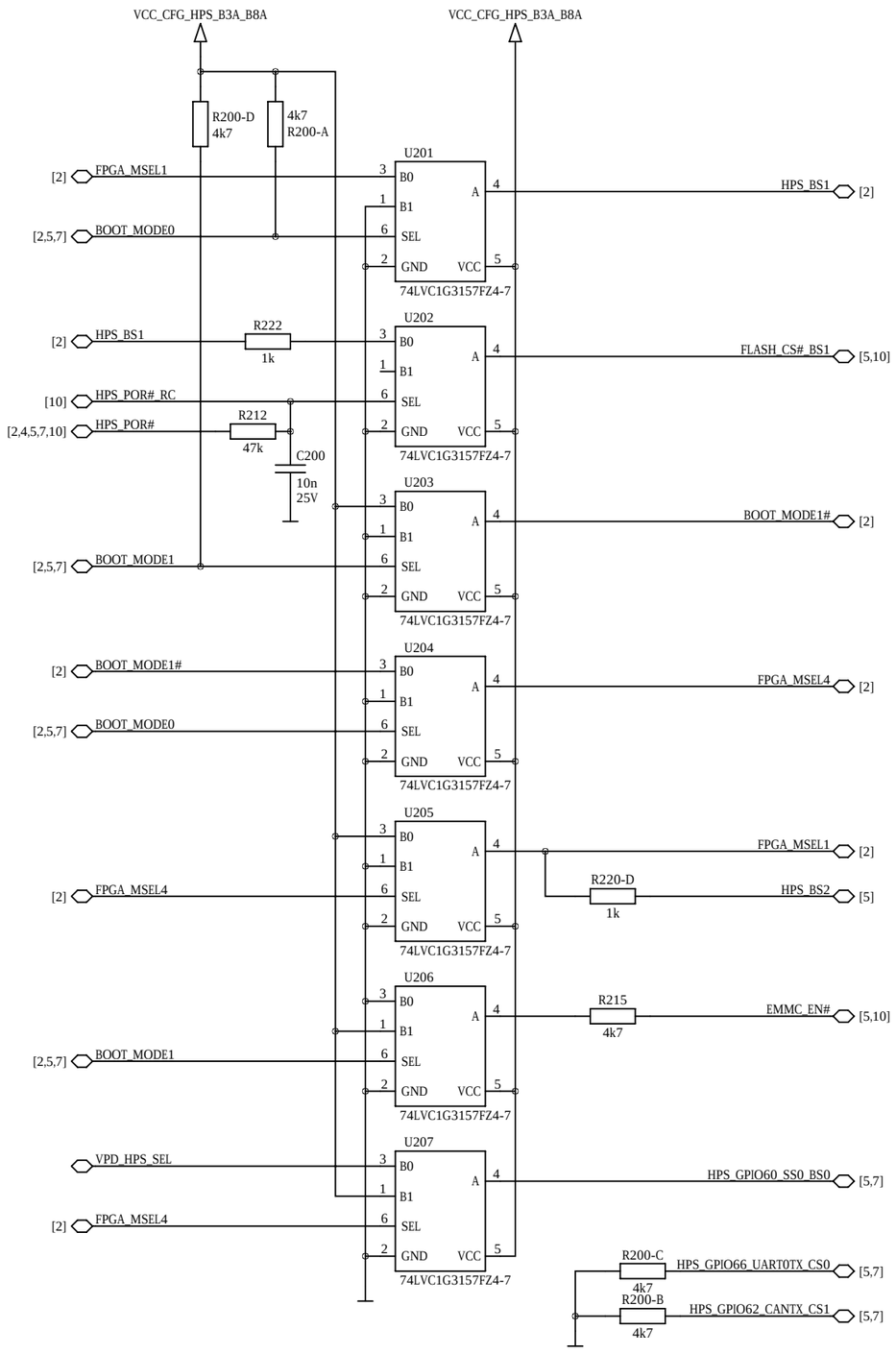


# FPGA Configuration

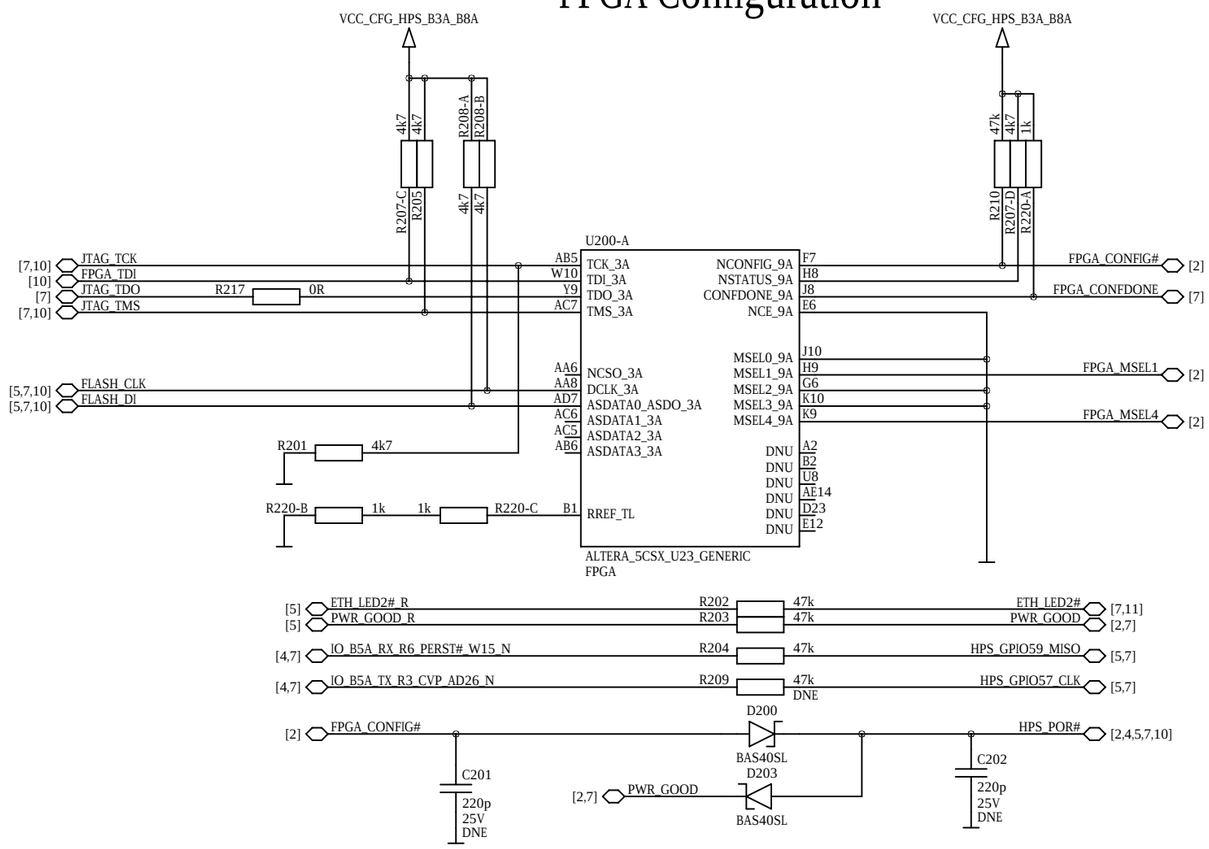


# Boot Modes

| | Boot Mode | | Configuration | | Mode Straps | | |
|---|---|---|---|---|---|---|---|
| | 1 | 0 | HPS boot | FPGA boot | MSEL | CSEL | BSEL |
| reserved | 0 | 0 | from FPGA | passive serial | 10000 | 00 | 001 |
| | 0 | 1 | eMMC | from HPS | 00010 | 00 | 10V |
| | 1 | 0 | QSPI | from HPS | 00010 | 00 | 11V |
| Default | 1 | 1 | SDIO | from HPS | 00010 | 00 | 10V |

V = Depends on VCC_CFG_HPS_B3A_B8A voltage (0=1.8V, 1=2.5-3.3V)
eMMC requires VCC_CFG_HPS_B3A_B8A voltage of 1.8V or 3.3V

R207-B 4k7

# FPGA MGT Bank L0

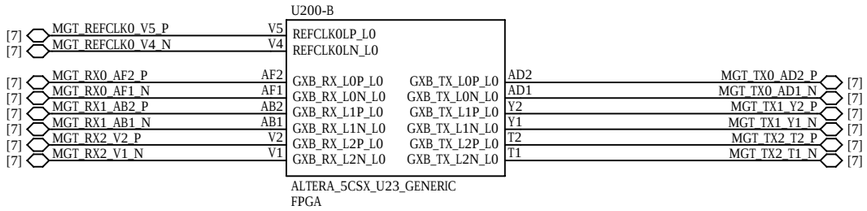


# FPGA MGT Bank L1

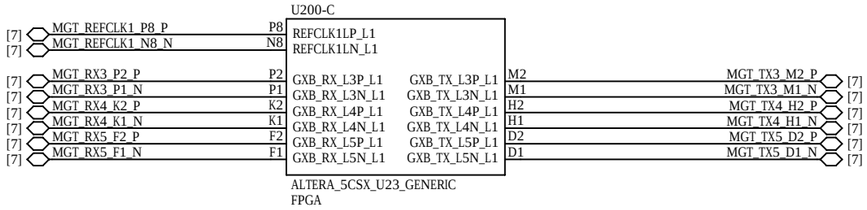


# FPGA Bank 3A

VCCIO = VCC_CFG_HPS_B3A_B8A

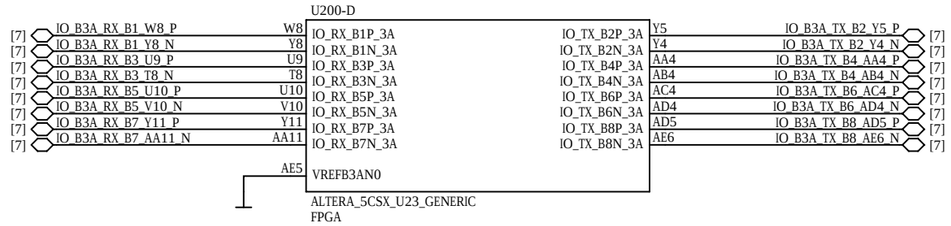


# FPGA Bank 3B

VCCIO = VCC_IO_B3B_B4A

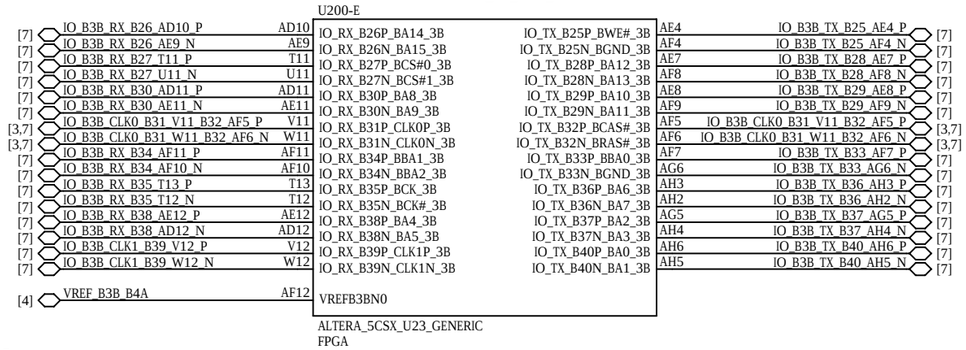


# FPGA Decoupling

not included in user schematics

This part is intentionally left blank.

# FPGA Bank 4A

VCCIO = VCC_IO_B3B_B4A

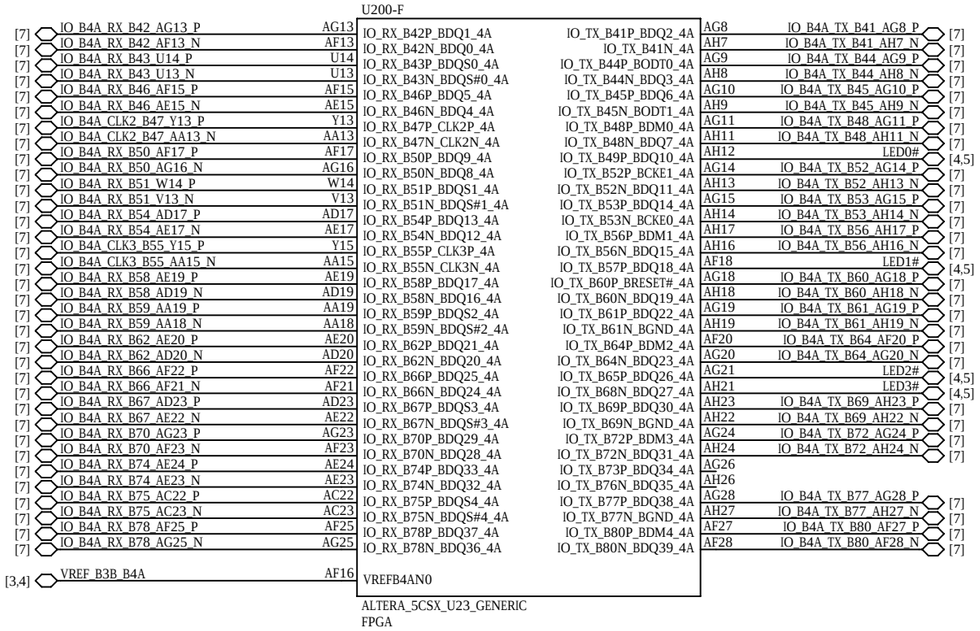


# FPGA Bank 5A

VCCIO = VCC_IO_B5A_B5B

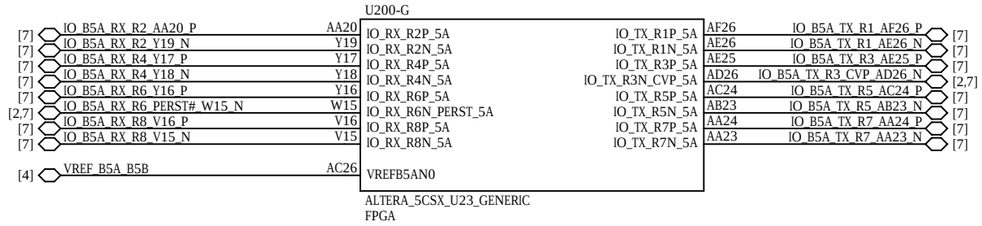


# FPGA Bank 5B

VCCIO = VCC_IO_B5A_B5B

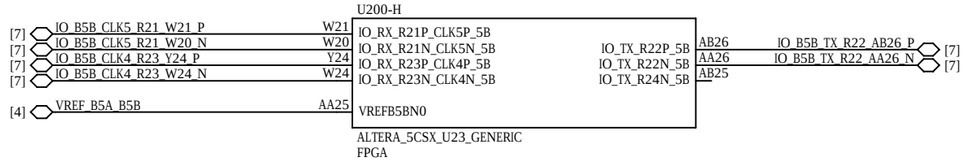


# User LEDs

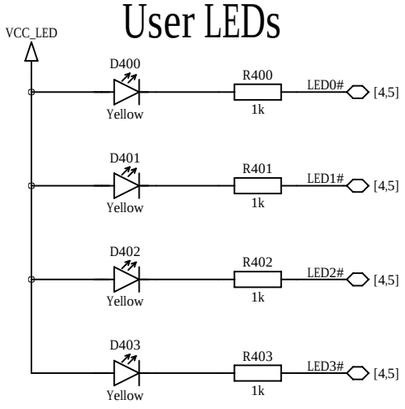


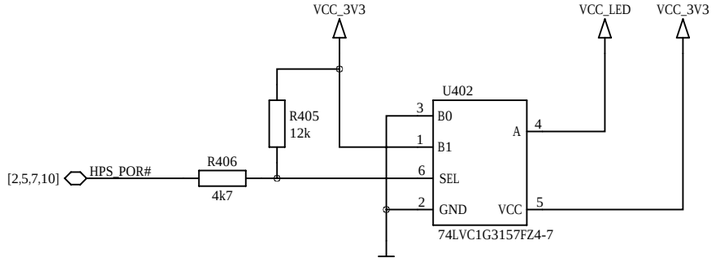


# FPGA Bank 8A

VCCIO = VCC_CFG_HPS_B3A_B8A

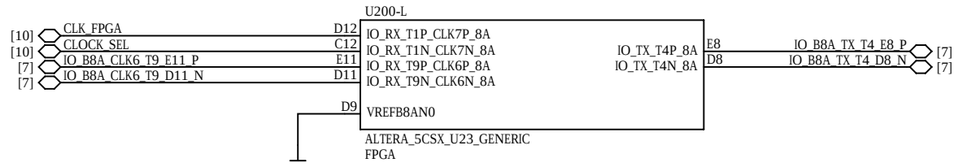


# FPGA Reference Voltages

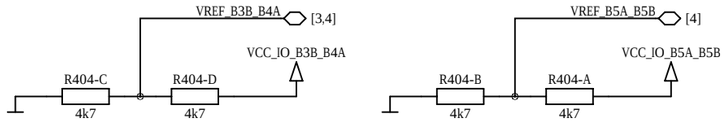


| | | | | | | | | | |
|---|---|---|---|---|---|---|---|---|---|
| ENCLUSTRA | Copyright | © 2018 by Enclustra GmbH | Sheet Name | 4_FPGA_BANK4/5/8_LEDS | Customer No | 0000 | Revision | R3.0 | DNE = do not equip | Confidential |
| | Company | Enclustra GmbH | Project | Mercury SA1 | Project No | 405 | Designed | MHEI | Date 31 Oct 2018 | Sheet/sheets 4 / 18 |

# FPGA HPS Bank 6A

VCCIO = VCC_1V35

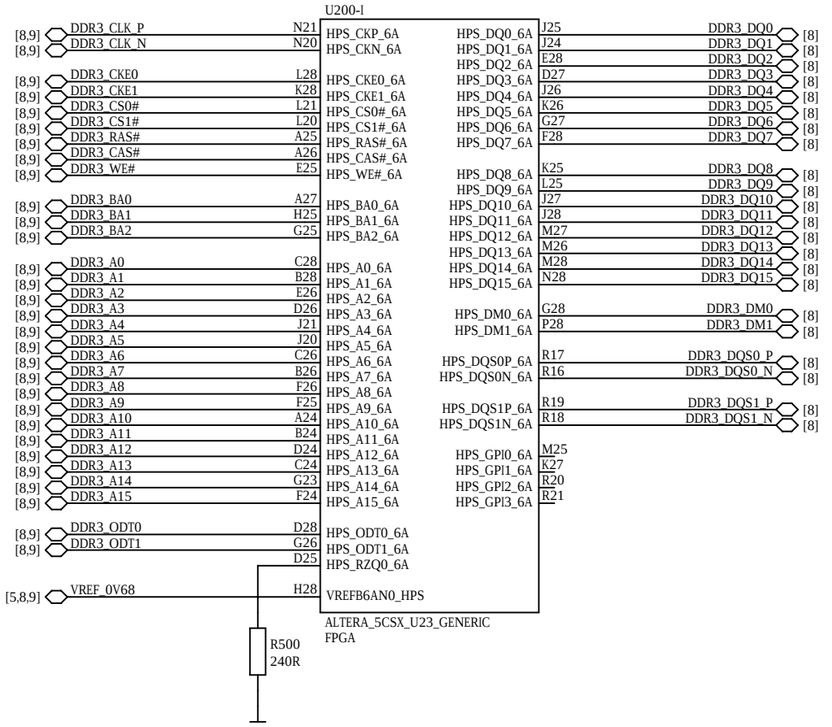


R500
240R

# FPGA HPS Bank 6B

VCCIO = VCC_1V35

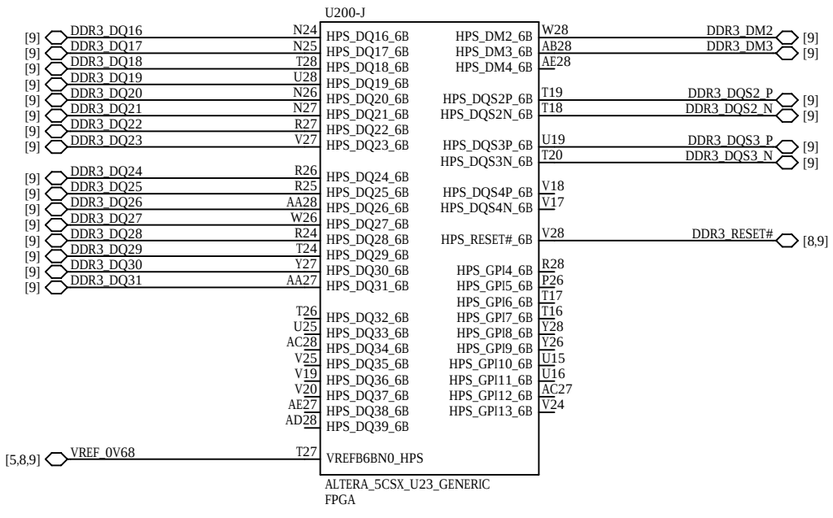


# FPGA HPS Bank 7

VCCIO = VCC_CFG_HPS_B3A_B8A

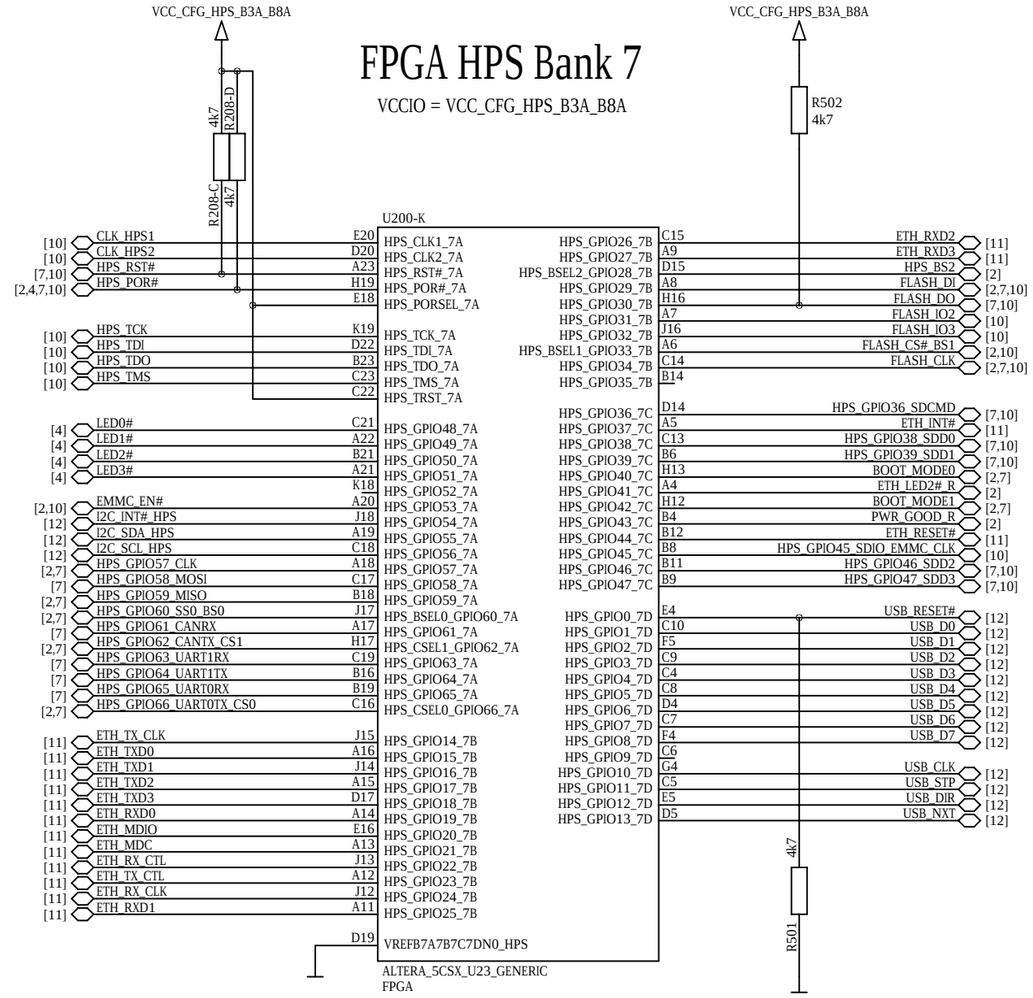

# FPGA Ground

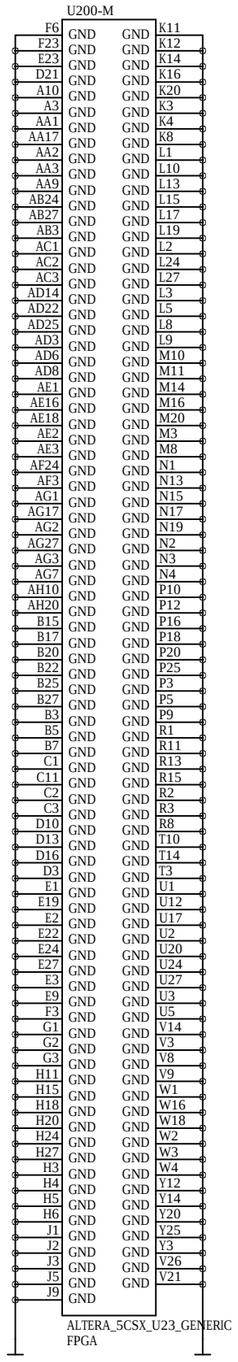


# FPGA Power

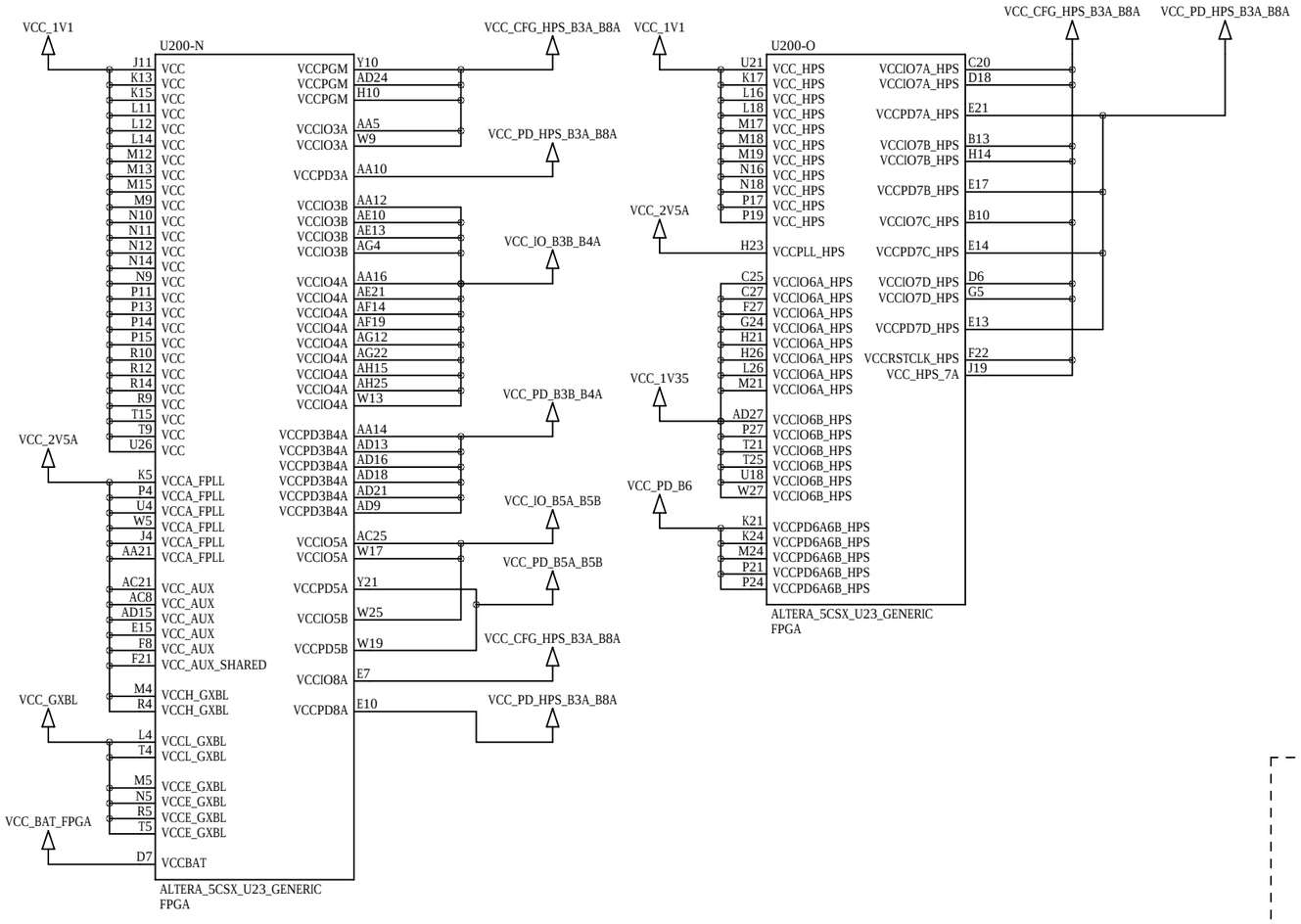


# FPGA Battery Voltage

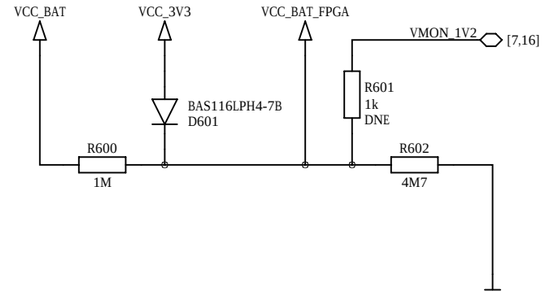


# FPGA PLL Filters

not included in user schematics

This part is intentionally left blank.

| | | | | | | | | | |
|---|---|---|---|---|---|---|---|---|---|
| ENCLUSTRA | Copyright | © 2018 by Enclustra GmbH | Sheet Name | 6_FPGA_POWER | Customer No | 0000 | Revision | R3.0 | DNE = do not equip | Confidential |
| | Company | Enclustra GmbH | Project | Mercury SA1 | Project No | 405 | Designed | MHEI | Date 31 Oct 2018 | Sheet/sheets 6 / 18 |

# Module Connector A

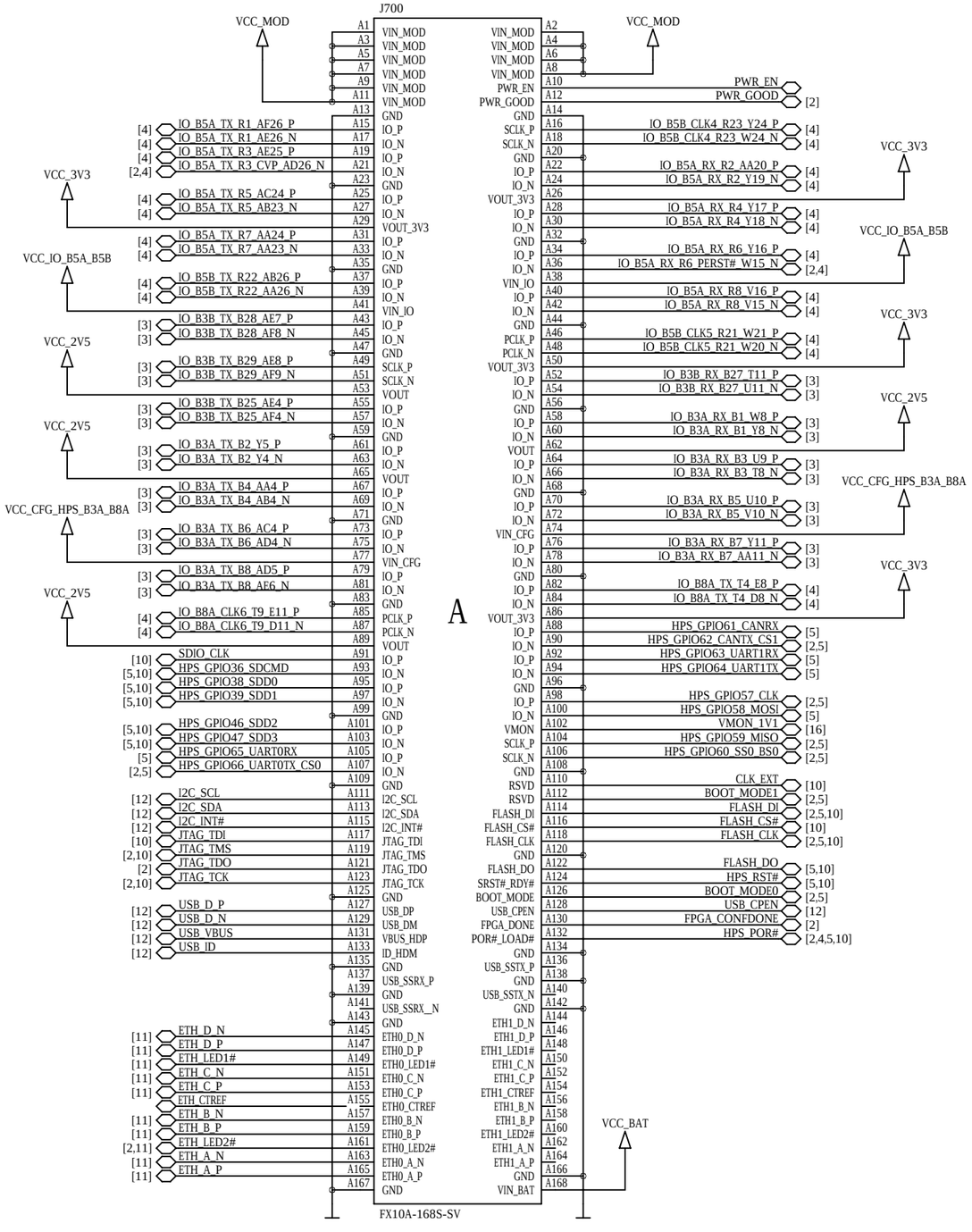


# Module Connector B

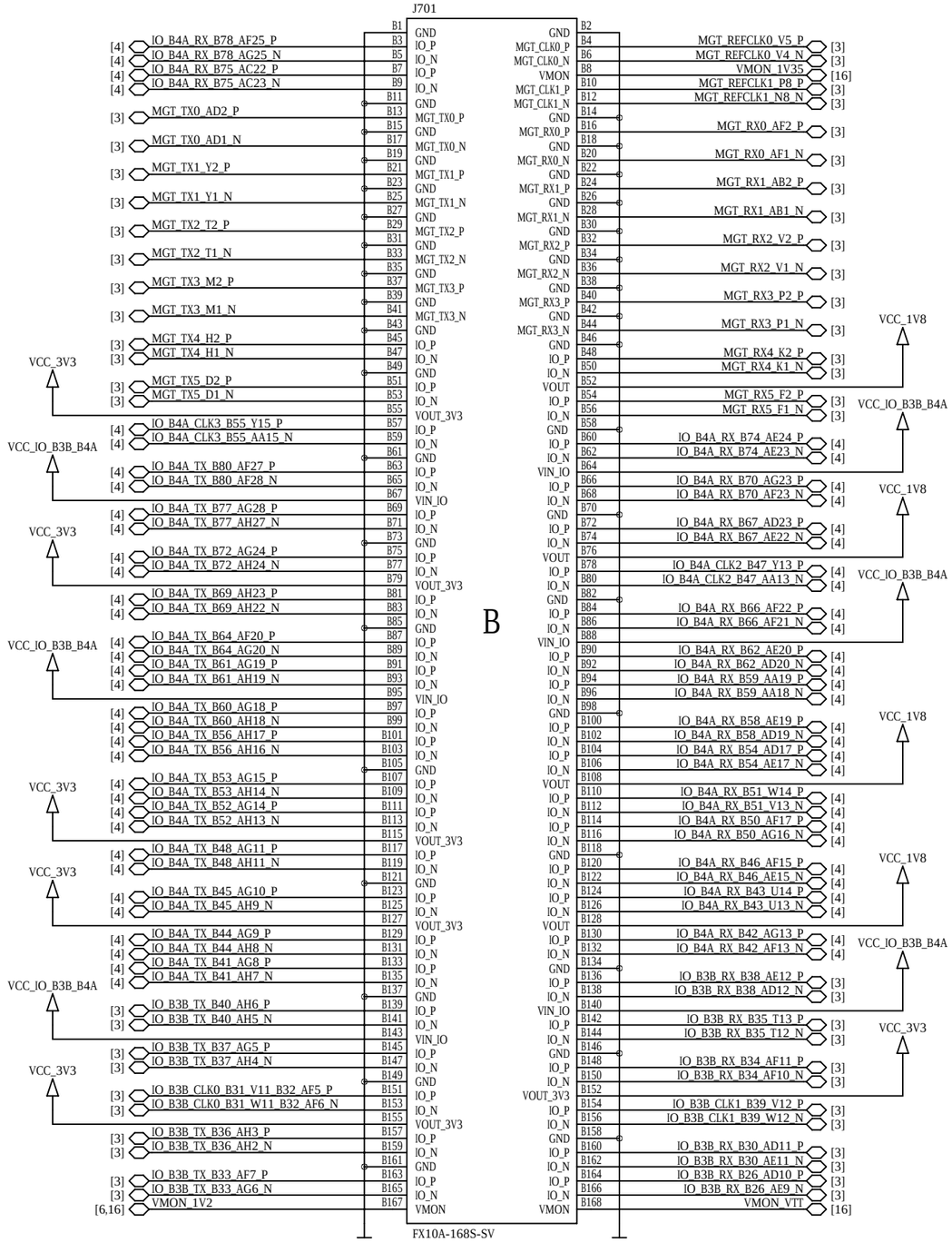


| | | | | | | | | | |
|---|---|---|---|---|---|---|---|---|---|
| ENCLUSTRA | Copyright | © 2018 by Enclustra GmbH | Sheet Name | 7_MODULE_CONNECTORS | Customer No | 0000 | Revision | R3.0 | DNE = do not equip | Confidential |
| | Company | Enclustra GmbH | Project | Mercury SA1 | Project No | 405 | Designed | MHEI | Date 31 Oct 2018 | Sheet/sheets 7 / 18 |

# DDR3L SDRAM Byte 0

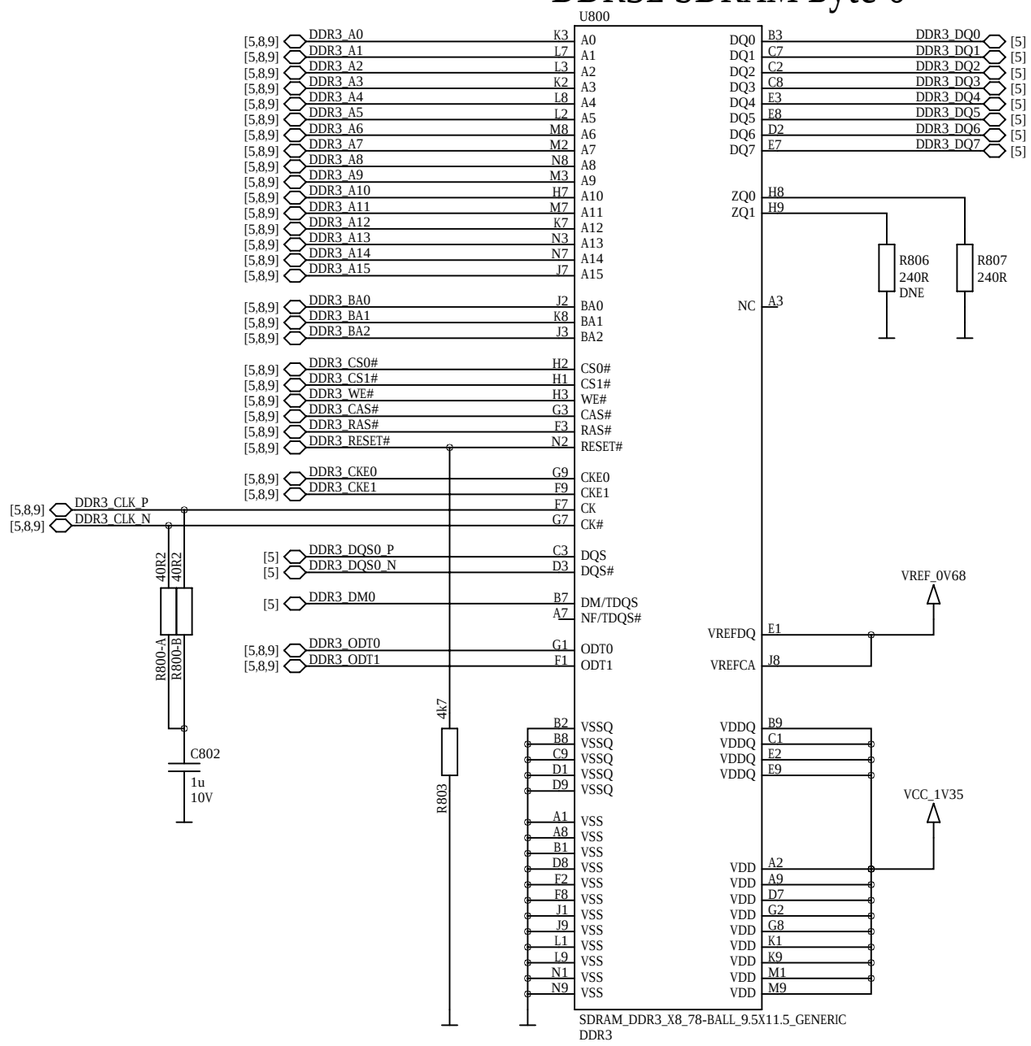


# DDR3L SDRAM Byte 1

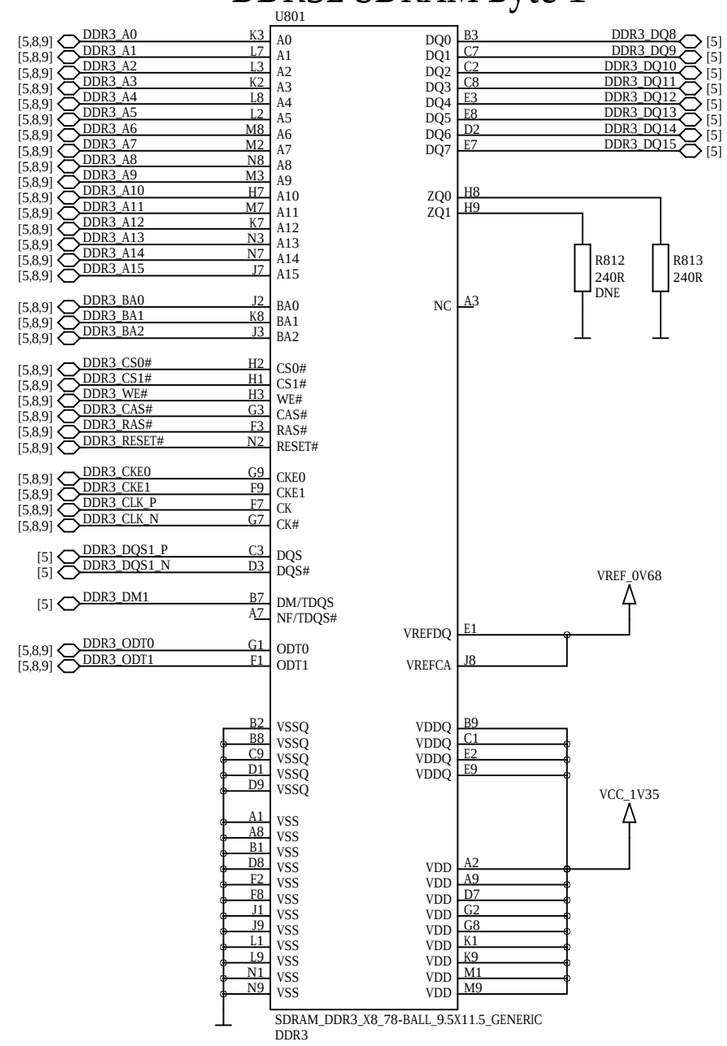


# DDR3L Decoupling

not included in user schematics

This part is intentionally left blank.

# DDR3L Termination

not included in user schematics

This part is intentionally left blank.

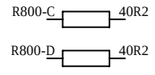


| | | | | | | | | | |
|---|---|---|---|---|---|---|---|---|---|
| ENCLUSTRA | Copyright | © 2018 by Enclustra GmbH | Sheet Name | 8_DDR3L_SDRAM_LSB | Customer No | 0000 | Revision | R3.0 | DNE = do not equip | Confidential |
| | Company | Enclustra GmbH | Project | Mercury SA1 | Project No | 405 | Designed | MHEI | Date 31 Oct 2018 | Sheet/sheets 8 / 18 |

# DDR3L SDRAM Byte 2

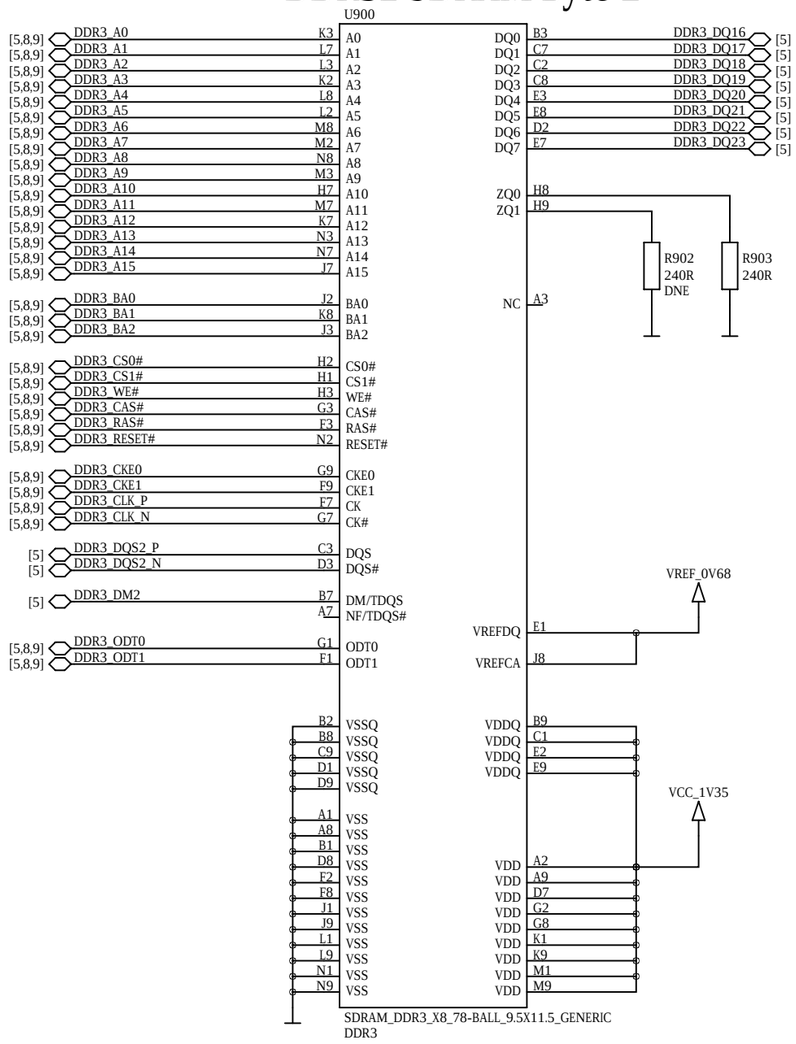


# DDR3L SDRAM Byte 3

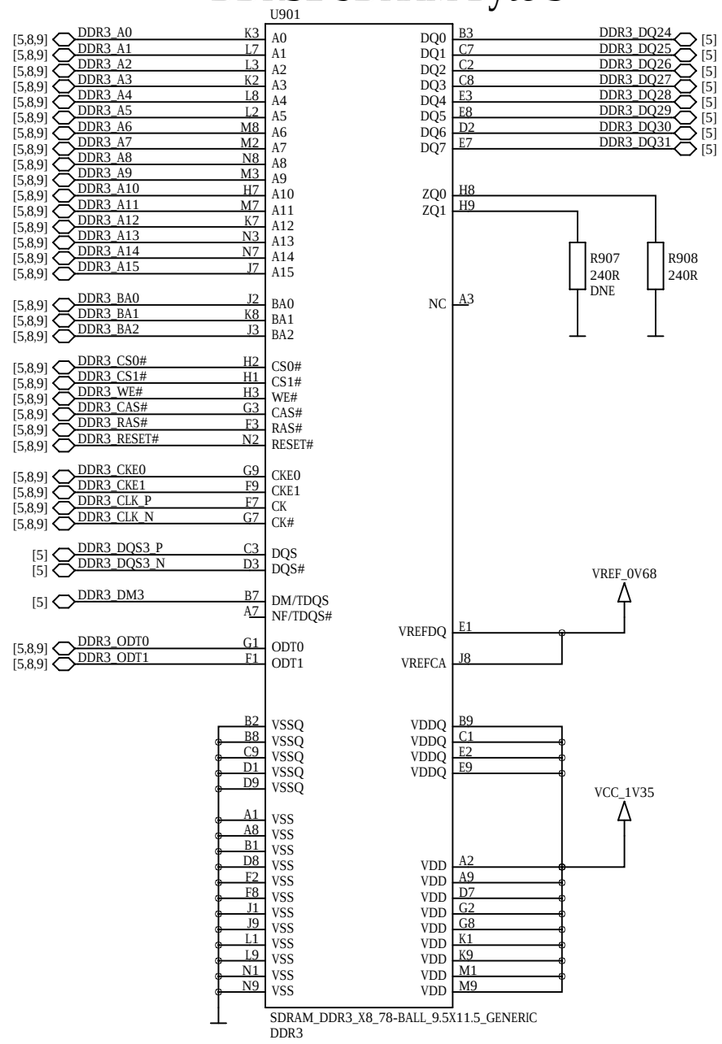


# VREF DDR3L

not included in user schematics

This part is intentionally left blank.

# DDR3L Termination

not included in user schematics

This part is intentionally left blank.

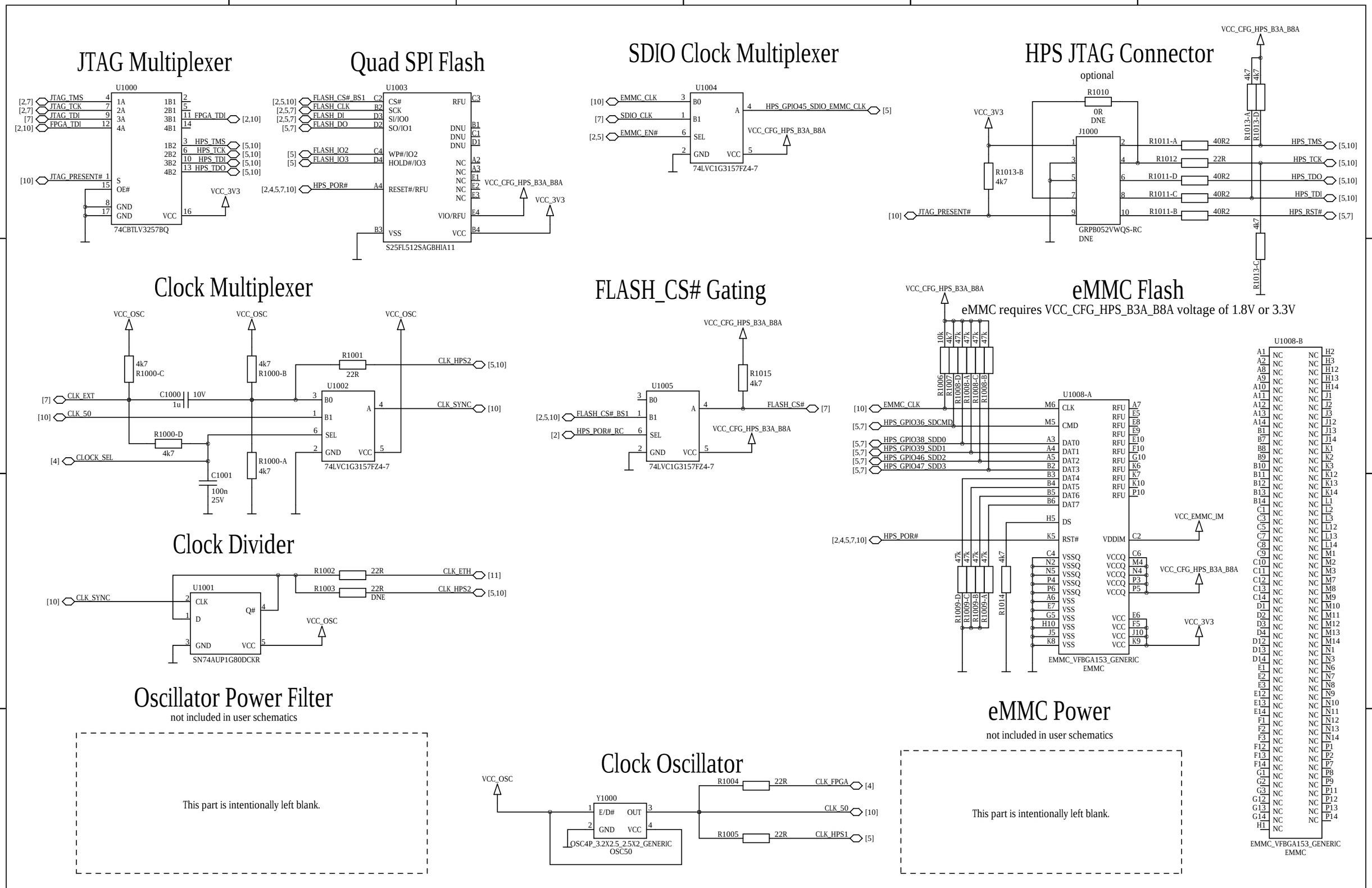


| | | | | | | | |
|---|---|---|---|---|---|---|---|
| ENCLUSTRA | Copyright © 2018 by Enclustra GmbH | Sheet Name 10_FLASH_JTAG_CLOCK_EMMC | Customer No 0000 | Revision R3.0 | DNE = do not equip | Confidential |
| | Company Enclustra GmbH | Project Mercury SA1 | Project No 405 | Designed MHEI | Date 31 Oct 2018 | Sheet/sheets 10 / 18 |

# Gigabit Ethernet PHY

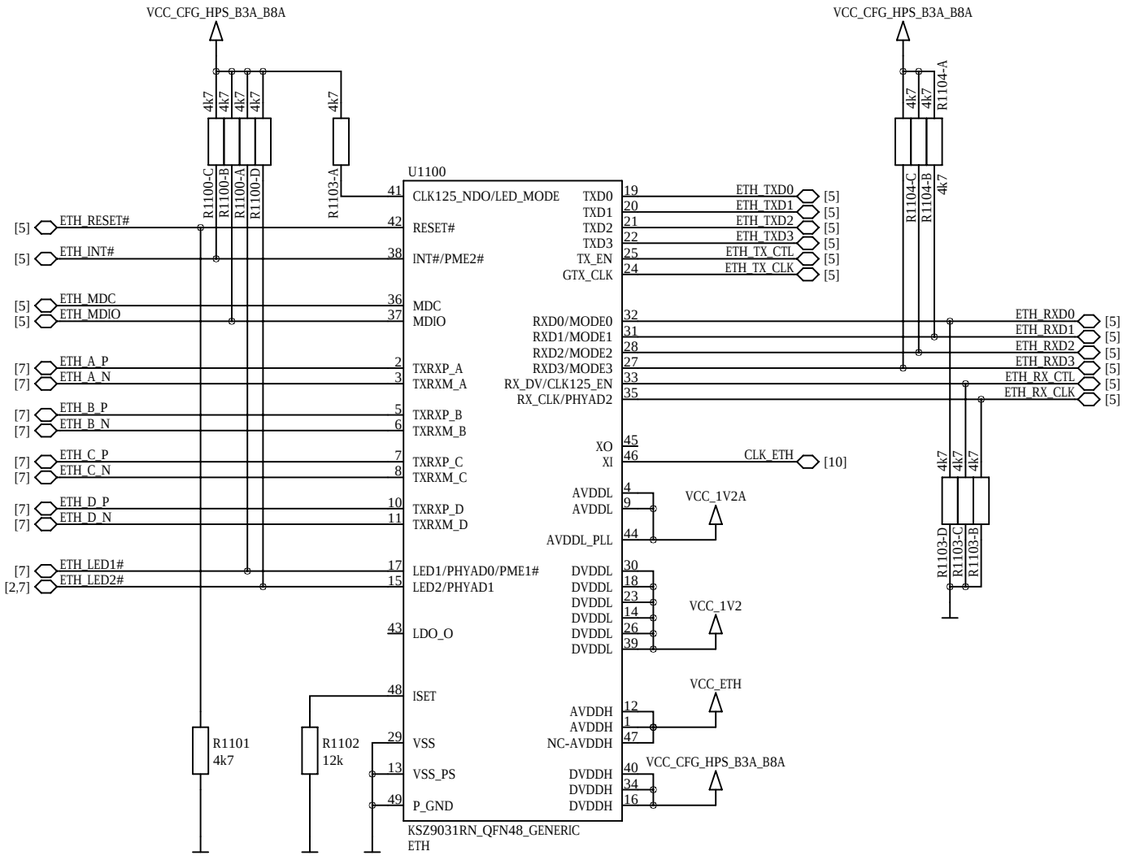


MODE<3:0> = 1110 -> RGMII, all capabilities
LED_Mode Pull up = Single LED
PhyAddress <2:0> = 011 -> 3
LED1 and LED2 are active low

# Ethernet Supply Filters

not included in user schematics

This part is intentionally left blank.

# USB 2.0 PHY

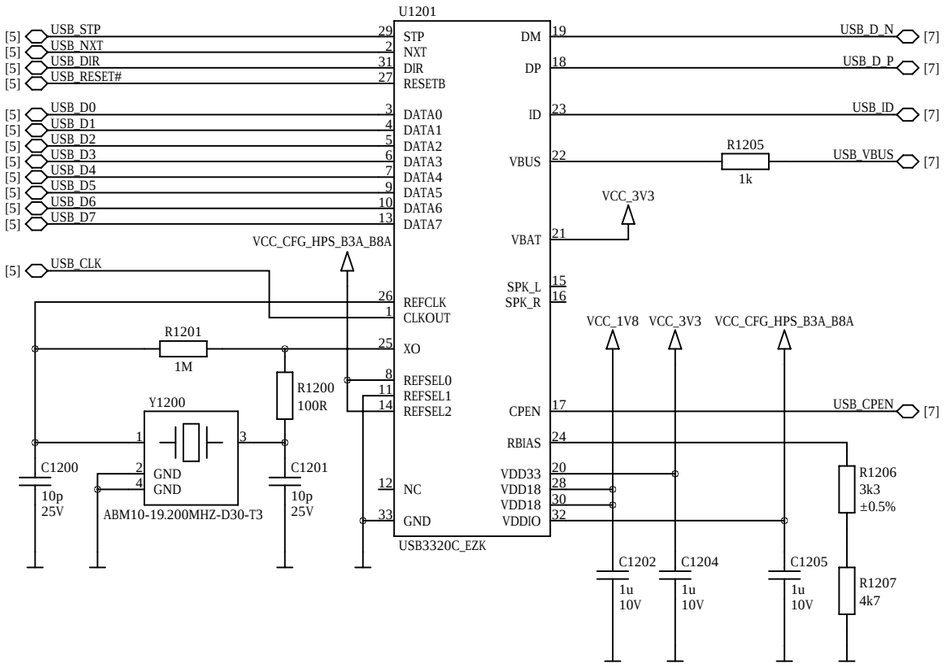


# Real-time Clock

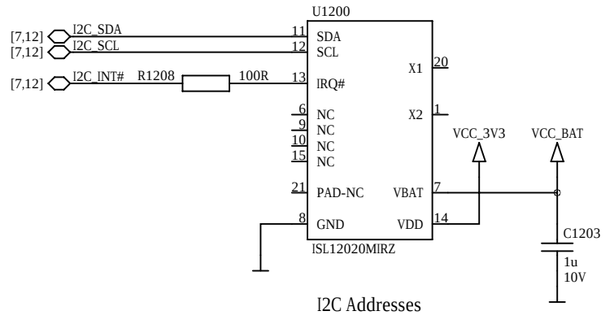


I2C Addresses

RTC registers: 1 1 0 1  1 1 1 Rw

User SRAM: 1 0 1 0  1 1 1 Rw

# I2C Level Shifter

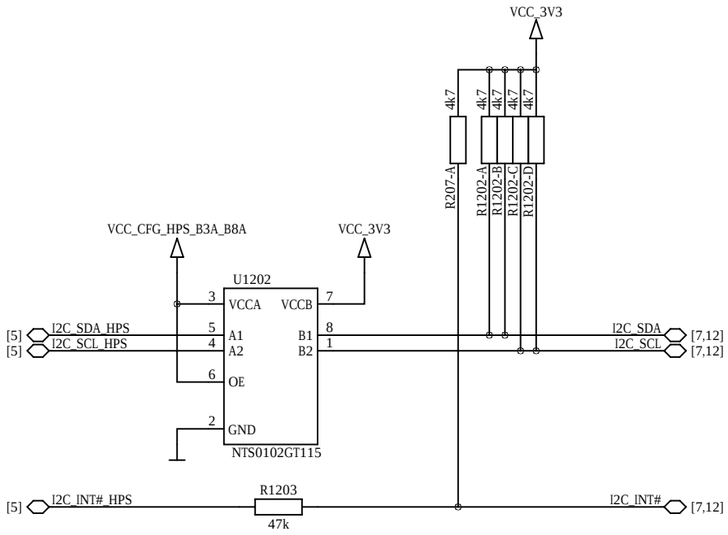


# Secure EEPROMs

for Enclustra use only

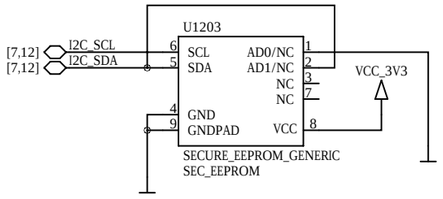


ATSHA204A-MAHDA-T I2C Address: 1 1 0 0  1 0 0 Rw

DS28CN01U-A00+ I2C Address: 1 0 1 1  1 0 0 Rw

| | | | | | | | | | |
|---|---|---|---|---|---|---|---|---|---|
| ENCLUSTRA | Copyright | © 2018 by Enclustra GmbH | Sheet Name | 12_USB2_PHY_RTC_EEPROM | Customer No | 0000 | Revision | R3.0 | DNE = do not equip | Confidential |
| | Company | Enclustra GmbH | Project | Mercury SA1 | Project No | 405 | Designed | MHEI | Date 31 Oct 2018 | Sheet/sheets 12 / 18 |

# DC / DC Converter 3.3V 9A 5%

not included in user schematics

This part is intentionally left blank.

# Supported Voltage Ranges

| Power Rail | Direction | Range | Tolerance |
|---|---|---|---|
| VCC_MOD | input | 5 - 15V | ±5% |
| VCC_IO_B5A_B5B | input | 1.2 - 3.3V | ±5% |
| VCC_CFG_HPS_B3A_B8A | input | 1.8V, 2.5 - 3.3V | ±5% |
| VCC_IO_B3B_B4A | input | 1.2 - 3.3V | ±5% |
| VCC_BAT | input | 2.0 - 3.6V | - |
| VCC_3V3 | output | 3.3V | ±5% |
| VCC_2V5 | output | 2.5V | ±5% |
| VCC_1V8 | output | 1.8V | ±5% |

eMMC requires VCC_CFG_HPS_B3A_B8A voltage of 1.8V or 3.3V

# DC / DC Converter 1.1V 9A 3%

not included in user schematics

This part is intentionally left blank.

# Input Power Filter

not included in user schematics

This part is intentionally left blank.

# Dual DC/DC Converter

channel 1: 1.35V 1.5A 5%
channel 2: 1.2V 1A 3%
not included in user schematics

This part is intentionally left blank.

# Dual DC/DC Converter

channel 1: 2.5V 1.5A 5%
channel 2: 1.8V 1A 5%
not included in user schematics

This part is intentionally left blank.

## Reference Voltage Generation

not included in user schematics

This part is intentionally left blank.

## Voltage Monitoring

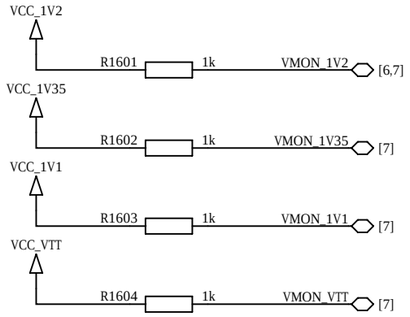


## Power Decoupling

not included in user schematics

This part is intentionally left blank.

## Pre-Driver Voltage Generation

not included in user schematics

This part is intentionally left blank.

## DDR3L Termination Voltage Regulator

not included in user schematics

This part is intentionally left blank.

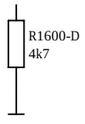

## Module Mounting Holes M3

M1703

ME-MOUNTING-HOLES_BOARD-55.6X54

## PCB Fiducials

FID1701 Fiducial pcb
FID1702 Fiducial pcb
FID1703 Fiducial pcb
FID1704 Fiducial pcb
FID1705 Fiducial pcb
FID1706 Fiducial pcb

## Panel Fiducials

FID1707 Fiducial panel
FID1708 Fiducial panel
FID1709 Fiducial panel
FID1710 Fiducial panel
FID1711 Fiducial panel
FID1712 Fiducial panel
FID1713 Fiducial panel
FID1714 Fiducial panel

## Heat Sink Mounting Holes M2

M1702

HS-ME1-L56X54-A

## Indication

Z1703 1mm square
Z1704 1mm square

## FPGA Heat Sink

optional

Maxi-Grip
M1700
1
ATS-50230P-C1-R0
DNE

Super-Grip
M1701
1
ATS-X50230P-C1-R0
DNE

## PCB & Logo & Pin-1

P1700
ME-SA1-C

Z1700
LOGO
Enclustra (9.8x1.2mm)

Z1715
Text
Mercury SA1

| | | | | | | | | | |
|---|---|---|---|---|---|---|---|---|---|
| ENCLUSTRA | Copyright | © 2018 by Enclustra GmbH | Sheet Name | 17_MECHANICS | Customer No | 0000 | Revision | R3.0 | DNE = do not equip | Confidential |
| | Company | Enclustra GmbH | Project | Mercury SA1 | Project No | 405 | Designed | MHEI | Date 31 Oct 2018 | Sheet/sheets 17 / 18 |

# Component Variants

| FPGA | DDR3 | | | | Ethernet PHY | eMMC | OSC50 | SEC_EEPROM | L2U2 |
|---|---|---|---|---|---|---|---|---|---|
| Part U200A 5CSXFC5C6U23C8N EN102048 | Part U800A NT5CC256M8IN-DII EN101432 | Part U801A NT5CC256M8IN-DII EN101432 | Part U900A NT5CC256M8IN-DII EN101432 | Part U901A NT5CC256M8IN-DII EN101432 | Part U1100A KSZ9031RNXIA EN101934 | Part U1008A H26M52208FPRI EN101865 | Part Y1000A ASDMB-50.000MHZ-LC-T EN100918 | Part U1203A ATSHA204A-MAHDA-T EN100827 | Part L1401:1 2u2 EN101850 |
| Part U200B 5CSXFC6C6U23I7N EN100806 | Part U800B NT5CC256M8FN-DII EN101023 | Part U801B NT5CC256M8FN-DII EN101023 | Part U900B NT5CC256M8FN-DII EN101023 | Part U901B NT5CC256M8FN-DII EN101023 | Part U1100B KSZ9031RNXCA EN100202 | Part U1008B EMMC16G-W525-X01U EN101932 | Part Y1000B ASEMB_50.000MHZ-LC-T EN100288 | Part U1203B DS28CN01U-A00+ EN100280 | Part L1401:2 2u2 EN101849 |
| | Part U800C MT41K256M8DA-125IT:K EN101019 | Part U801C MT41K256M8DA-125IT:K EN101019 | Part U900C MT41K256M8DA-125IT:K EN101019 | Part U901C MT41K256M8DA-125IT:K EN101019 | | | | | Part L1402:1 2u2 EN101850 |
| | Part U800D MT41K256M8DA-125:K EN100251 | Part U801D MT41K256M8DA-125:K EN100251 | Part U900D MT41K256M8DA-125:K EN100251 | Part U901D MT41K256M8DA-125:K EN100251 | | | | | Part L1402:2 2u2 EN101849 |
| | | | | | | | | | Part L1501:1 2u2 EN101850 |
| | | | | | | | | | Part L1501:2 2u2 EN101849 |
| | | | | | | | | | Part L1502:1 2u2 EN101850 |
| | | | | | | | | | Part L1502:2 2u2 EN101849 |

# Assembly Variants

| Assembly Variant | FPGA | DDR3 | Ethernet PHY | eMMC | OSC50 | SEC_EEPROM | L2U2 |
|---|---|---|---|---|---|---|---|
| Variant EN102107:0 ME-SA1-C5-8C-D10-R3 | Option EN102107:1 FPGA EN102048 | Option EN102107:2 DDR3 EN100251 | Option EN102107:3 ETH EN101934 | Option EN102107:4 EMMC EN101932 | Option EN102107:5 OSC50 EN100288 | Option EN102107:6 SEC_EEPROM EN100280 | Option EN102107:7 L2U2 EN101850 |
| Variant EN102108:0 ME-SA1-C6-7I-D10-R3 | Option EN102108:1 FPGA EN100806 | Option EN102108:2 DDR3 EN101432 | Option EN102108:3 ETH EN101934 | Option EN102108:4 EMMC EN101932 | Option EN102108:5 OSC50 EN100288 | Option EN102108:6 SEC_EEPROM EN100280 | Option EN102108:7 L2U2 EN101850 |