Enclustra User Schematics

Mercury SA2 Revision 1.4

Disclaimer

User schematics do not include proprietary Enclustra design elements, such as power supply circuits.
These circuits use optimized designs which are extremely compact and remain proprietary to Enclustra.
The user manual provides all necessary information to use the module and its interfaces.

User schematics are provided after purchase of Enclustra hardware, and may also be provided in certain cases before purchase, to assist in product evaluation.
No part of the schematics may be copied or modified without written permission from Enclustra.

Full schematics, including a full bill-of-materials, may be available through the purchase of a hardware licence for the product in question.
Please contact Enclustra Sales for more information.

Note: DNE = Do Not Equip (parts not equipped by default)

© Enclustra GmbH

Mercury SA2

Revision 1.4

Sheet 1: Cover
Sheet 2: FPGA Configuration
Sheet 3: FPGA Banks L0/L1/L2/3A/3B
Sheet 4: FPGA Banks 4A/5A/5B/8A
Sheet 5: FPGA Banks 6B/7
Sheet 6: FPGA Power
Sheet 7: FPGA Decoupling / User LEDs
Sheet 8: Module Connectors A/B
Sheet 9: Module Connector C
Sheet 10: HPS DDR3L SDRAM
Sheet 11: Flash / JTAG / Oscillator
Sheet 12: Gigabit Ethernet PHY
Sheet 13: Dual Fast Ethernet PHY
Sheet 14: USB 2.0 PHY / Real-time Clock / Secure EEPROMs
Sheet 15: USB 3.0 Device Controller
Sheet 16: USB 3.0 Peripherals / Power
Sheet 17: Power 3.3V / 1.1V / 5.0V
Sheet 18: Power 1.35V / 1.2V
Sheet 19: Power 2.5V / 1.8V / 1.55V / VTT
Sheet 20: Power Pre-Driver / Decoupling
Sheet 21: Mechanics
Sheet 22: Assembly Variants

Boot Mode Selection

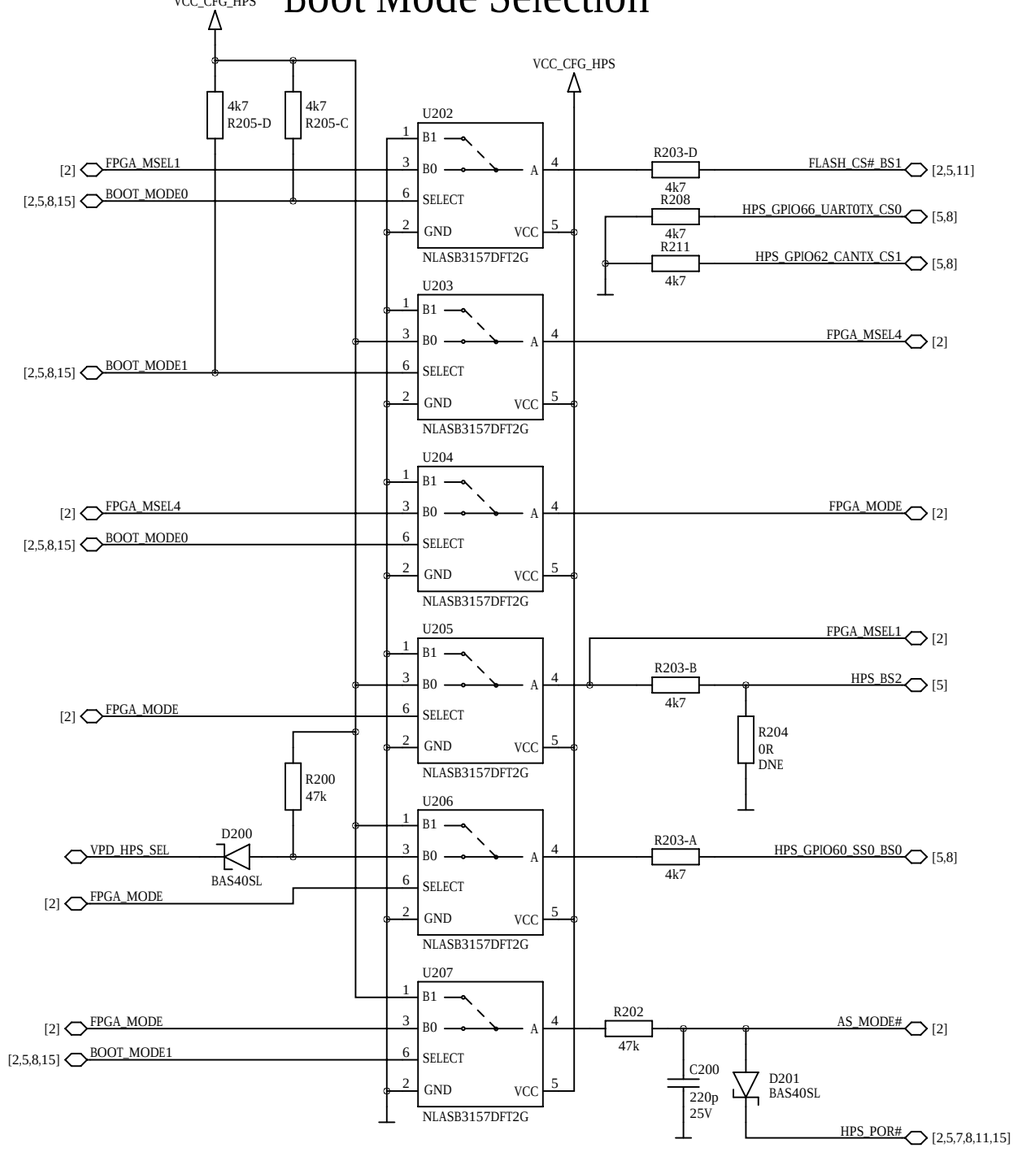

Flash Chip Select

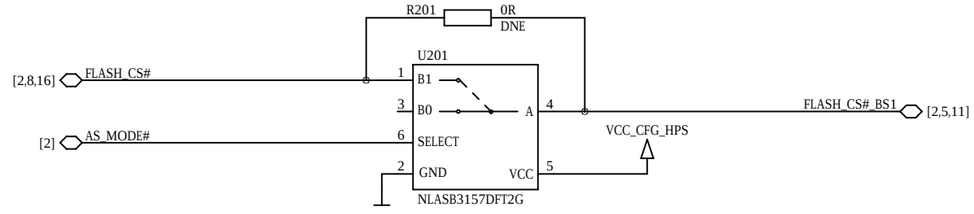

FPGA Configuration

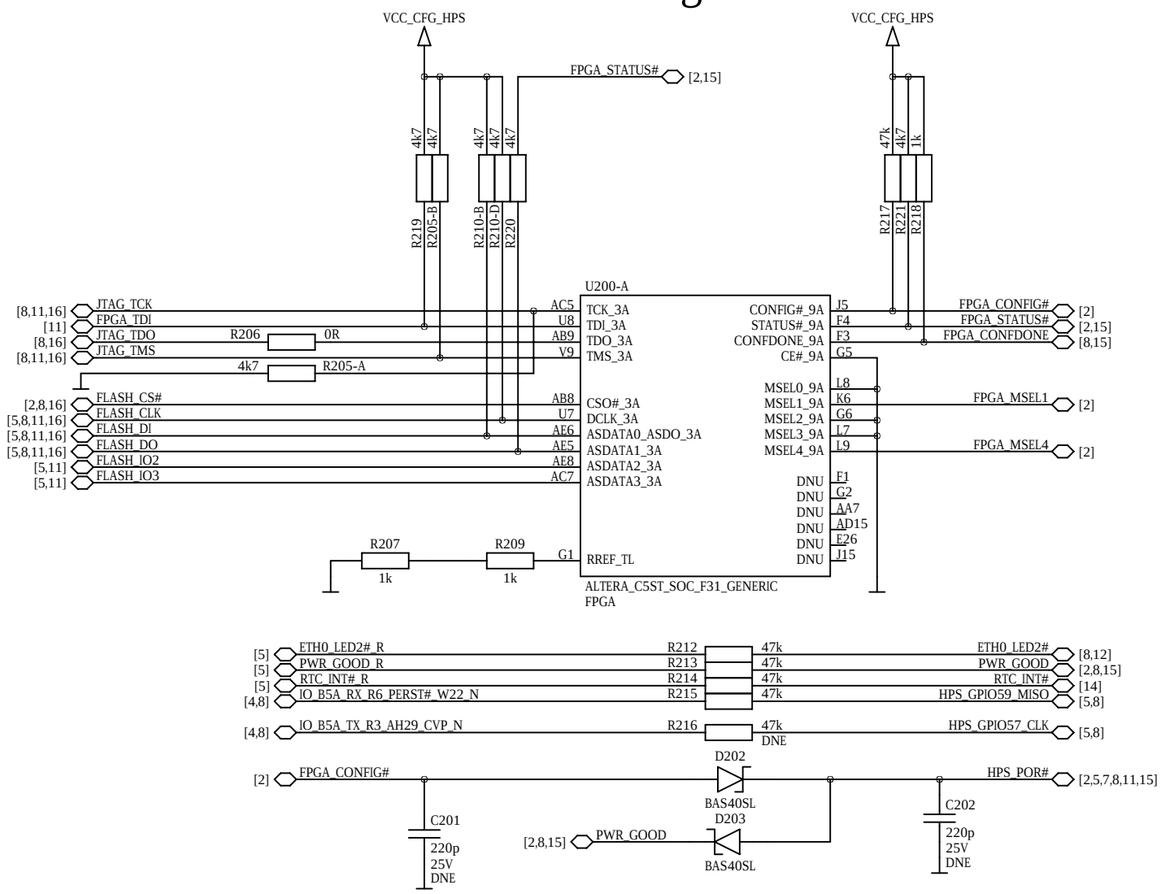

Boot Modes

	Boot Mode		Configuration		Mode Straps		
	1	0	HPS boot	FPGA boot	MSEL	CSEL	BSEL
FPGA Mode	0	0	from FPGA	passive serial	10000	00	001
reserved	0	1	SDIO	active serial	10010	00	10V
	1	0	QSPI	from HPS	00010	00	11V
Default	1	1	SDIO	from HPS	00010	00	10V

V = Depends on VCC_CFG_HPS voltage (0=1.8V, 1=2.5-3.3V)
Active serial currently unsupported (would require VCC_CFG_HPS voltage of 3.3V)

FPGA MGT Bank L0

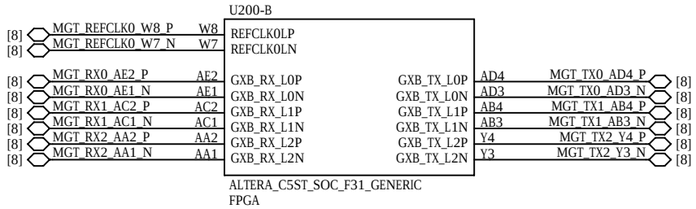

FPGA MGT Bank L1

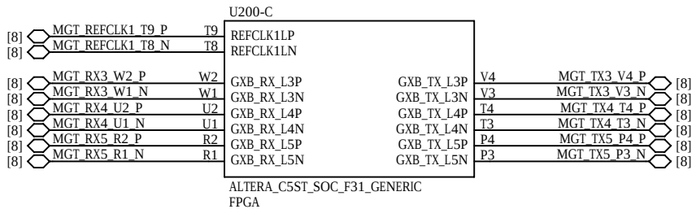

FPGA MGT Bank L2

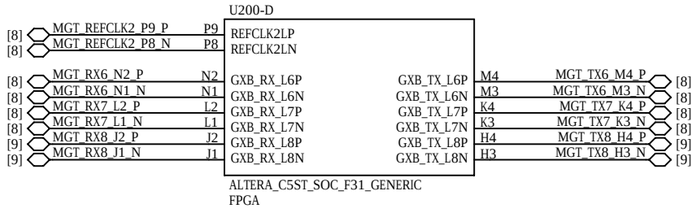

FPGA Reference Voltages

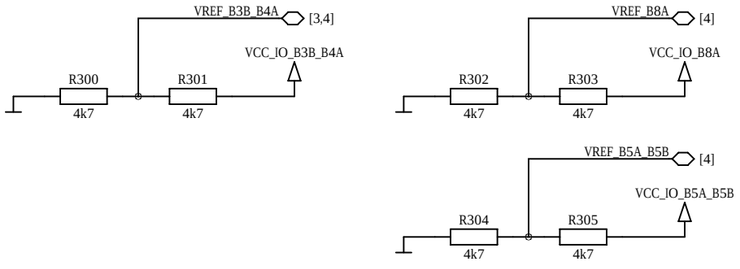

FPGA Bank 3A

VCCIO = VCC_1V8

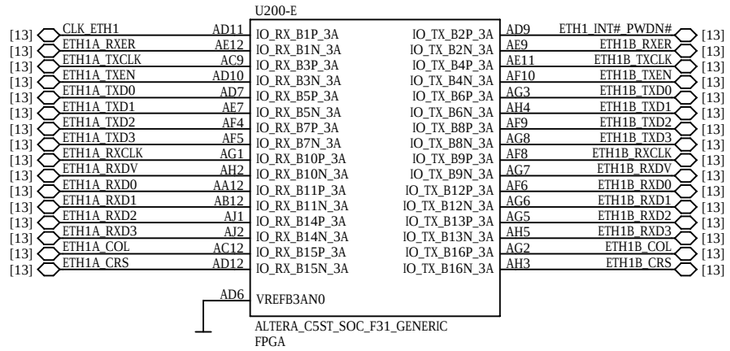

FPGA Bank 3B

VCCIO = VCC_IO_B3B_B4A

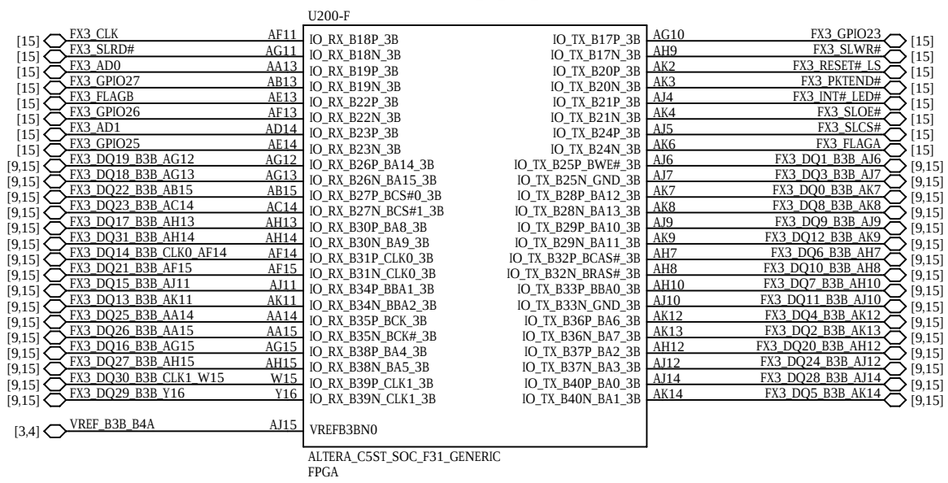

ENCLUSTRA	Copyright © 2018 by Enclustra GmbH	Sheet Name 3_FPGA_BANK_L0/L1/L2/3A/3B	Customer No 0000	Revision R1.4	DNE = do not equip	Confidential	
	Company Enclustra FPGA Solution Center	Project Mercury SA2	Project No 408	Designed MHEI	Date 13 Apr 2021	Sheet/sheets 3 / 22	

FPGA Bank 5A

VCCIO = VCC_IO_B5A_B5B

U200-H

[8]	IO_B5A_RX_R2_AD25_P	AD25	IO_RX_R2P_5A	IO_TX_R1P_5A	AG27	IO_B5A_TX_R1_AG27_P	[8]
[8]	IO_B5A_RX_R2_AC25_N	AC25	IO_RX_R2N_5A	IO_TX_R1N_5A	AH28	IO_B5A_TX_R1_AH28_N	[8]
[8]	IO_B5A_RX_R4_W20_P	W20	IO_RX_R4P_5A	IO_TX_R3P_5A	AJ29	IO_B5A_TX_R3_AJ29_P	[8]
[8]	IO_B5A_RX_R4_Y21_N	Y21	IO_RX_R4N_5A	IO_TX_R3N_5A	AH29	IO_B5A_TX_R3_AH29_CVP_N	[2,8]
[8]	IO_B5A_RX_R6_W21_P	W21	IO_RX_R6P_5A	IO_TX_R5P_5A	AE26	IO_B5A_TX_R5_AE26_P	[8]
[2,8]	IO_B5A_RX_R6_PERST#_W22_N	W22	IO_RX_R6N_5A	IO_TX_R5N_5A	AD27	IO_B5A_TX_R5_AD27_N	[8]
[8]	IO_B5A_RX_R8_AB22_P	AB22	IO_RX_R8P_5A	IO_TX_R7P_5A	AA25	IO_B5A_TX_R7_AA25_P	[8]
[8]	IO_B5A_RX_R8_AB23_N	AB23	IO_RX_R8N_5A	IO_TX_R7N_5A	AB26	IO_B5A_TX_R7_AB26_N	[8]
[8]	IO_B5A_RX_R9_AA24_P	AA24	IO_RX_R9P_5A	IO_TX_R10P_5A	AE27	IO_B5A_TX_R10_AE27_P	[8]
[8]	IO_B5A_RX_R9_AB25_N	AB25	IO_RX_R9N_5A	IO_TX_R10N_5A	AE28	IO_B5A_TX_R10_AE28_N	[8]
[8]	IO_B5A_RX_R11_Y23_P	Y23	IO_RX_R11P_5A	IO_TX_R12P_5A	AG28	IO_B5A_TX_R12_AG28_P	[8]
[8]	IO_B5A_RX_R11_Y24_N	Y24	IO_RX_R11N_5A	IO_TX_R12N_5A	AF28	IO_B5A_TX_R12_AF28_N	[8]
[8]	IO_B5A_RX_R13_V23_P	V23	IO_RX_R13P_5A	IO_TX_R14P_5A	AF29	IO_B5A_TX_R14_AF29_P	[8]
[8]	IO_B5A_RX_R13_W24_N	W24	IO_RX_R13N_5A	IO_TX_R14N_5A	AF30	IO_B5A_TX_R14_AF30_N	[8]
[8]	IO_B5A_RX_R15_AD26_P	AD26	IO_RX_R15P_5A	IO_TX_R16P_5A	AH30	IO_B5A_TX_R16_AH30_P	[8]
[8]	IO_B5A_RX_R15_AC27_N	AC27	IO_RX_R15N_5A	IO_TX_R16N_5A	AG30	IO_B5A_TX_R16_AG30_N	[8]
[3,4]	VREF_B5A_B5B	AC24	VREFB5AN0				

ALTERA_C5ST_SOC_F31_GENERIC
FPGA

FPGA Bank 5B

VCCIO = VCC_IO_B5A_B5B

U200-I

[8]	IO_B5B_RX_R17_W25_P	W25	IO_RX_R17P_5B	IO_TX_R18P_5B	AC28	IO_B5B_TX_R18_AC28_P	[8]
[8]	IO_B5B_RX_R17_V25_N	V25	IO_RX_R17N_5B	IO_TX_R18N_5B	AC29	IO_B5B_TX_R18_AC29_N	[8]
[8]	IO_B5B_RX_R19_AB30_P	AB30	IO_RX_R19P_5B	IO_TX_R20P_5B	AB28	IO_B5B_TX_R20_AB28_P	[8]
[8]	IO_B5B_RX_R19_AA30_N	AA30	IO_RX_R19N_5B	IO_TX_R20N_5B	AA28	IO_B5B_TX_R20_AA28_N	[8]
[8]	IO_B5B_CLK5_R21_AA26_P	AA26	IO_RX_R21P_CLK5_5B	IO_TX_R22P_5B	AE29	IO_B5B_TX_R22_AE29_P	[8]
[8]	IO_B5B_CLK5_R21_AB27_N	AB27	IO_RX_R21N_CLK5_5B	IO_TX_R22N_5B	AD29	IO_B5B_TX_R22_AD29_N	[8]
[8]	IO_B5B_CLK4_R23_Y26_P	Y26	IO_RX_R23P_CLK4_5B	IO_TX_R24P_5B	AD30	IO_B5B_TX_R24_AD30_P	[8]
[8]	IO_B5B_CLK4_R23_Y27_N	Y27	IO_RX_R23N_CLK4_5B	IO_TX_R24N_5B	AC30	IO_B5B_TX_R24_AC30_N	[8]
[3,4]	VREF_B5A_B5B	AA29	VREFB5BN0				

ALTERA_C5ST_SOC_F31_GENERIC
FPGA

FPGA Bank 8A

VCCIO = VCC_IO_B8A

U200-M

[8]	IO_B8A_CLK7_T1_H15_P	H15	IO_RX_T1P_CLK7_8A	IO_TX_T2P_8A	B13	IO_B8A_TX_T2_B13_P	[8]
[8]	IO_B8A_CLK7_T1_G15_N	G15	IO_RX_T1N_CLK7_8A	IO_TX_T2N_8A	A13	IO_B8A_TX_T2_A13_N	[8]
[8]	IO_B8A_RX_T3_C13_P	C13	IO_RX_T3P_8A	IO_TX_T4P_8A	A11	IO_B8A_TX_T4_A11_P	[8]
[8]	IO_B8A_RX_T3_B12_N	B12	IO_RX_T3N_8A	IO_TX_T4N_8A	A10	IO_B8A_TX_T4_A10_N	[8]
[8]	IO_B8A_RX_T5_F15_P	F15	IO_RX_T5P_8A	IO_TX_T6P_8A	C12	IO_B8A_TX_T6_C12_P	[8]
[8]	IO_B8A_RX_T5_F14_N	F14	IO_RX_T5N_8A	IO_TX_T6N_8A	B11	IO_B8A_TX_T6_B11_N	[8]
[8]	IO_B8A_RX_T7_D11_P	D11	IO_RX_T7P_8A	IO_TX_T8P_8A	A9	IO_B8A_TX_T8_A9_P	[8]
[8]	IO_B8A_RX_T7_D10_N	D10	IO_RX_T7N_8A	IO_TX_T8N_8A	A8	IO_B8A_TX_T8_A8_N	[8]
[8]	IO_B8A_CLK6_T9_K14_P	K14	IO_RX_T9P_CLK6_8A	IO_TX_T10P_8A	C7	IO_B8A_TX_T10_C7_P	[8]
[8]	IO_B8A_CLK6_T9_J14_N	J14	IO_RX_T9N_CLK6_8A	IO_TX_T10N_8A	B7	IO_B8A_TX_T10_B7_N	[8]
[8]	IO_B8A_RX_T11_E9_P	E9	IO_RX_T11P_8A	IO_TX_T12P_8A	C8	IO_B8A_TX_T12_C8_P	[8]
[8]	IO_B8A_RX_T11_D9_N	D9	IO_RX_T11N_8A	IO_TX_T12N_8A	B8	IO_B8A_TX_T12_B8_N	[8]
[8]	IO_B8A_RX_T13_H14_P	H14	IO_RX_T13P_8A	IO_TX_T14P_8A	C10	IO_B8A_TX_T14_C10_P	[8]
[8]	IO_B8A_RX_T13_G13_N	G13	IO_RX_T13N_8A	IO_TX_T14N_8A	C9	IO_B8A_TX_T14_C9_N	[8]
[8]	IO_B8A_RX_T15_F13_P	F13	IO_RX_T15P_8A	IO_TX_T16P_8A	A6	IO_B8A_TX_T16_A6_P	[8]
[8]	IO_B8A_RX_T15_E13_N	E13	IO_RX_T15N_8A	IO_TX_T16N_8A	A5	IO_B8A_TX_T16_A5_N	[8]
[8]	IO_B8A_RX_T17_H8_P	H8	IO_RX_T17P_8A	IO_TX_T18P_8A	A4	IO_B8A_TX_T18_A4_P	[8]
[8]	IO_B8A_RX_T17_G8_N	G8	IO_RX_T17N_8A	IO_TX_T18N_8A	A3	IO_B8A_TX_T18_A3_N	[8]
[8]	IO_B8A_RX_T19_E12_P	E12	IO_RX_T19P_8A	IO_TX_T20P_8A	D6	IO_B8A_TX_T20_D6_P	[8]
[8]	IO_B8A_RX_T19_D12_N	D12	IO_RX_T19N_8A	IO_TX_T20N_8A	C5	IO_B8A_TX_T20_C5_N	[8]
[8]	IO_B8A_RX_T21_H13_P	H13	IO_RX_T21P_8A	IO_TX_T22P_8A	D5	IO_B8A_TX_T22_D5_P	[8]
[8]	IO_B8A_RX_T21_H12_N	H12	IO_RX_T21N_8A	IO_TX_T22N_8A	C4	IO_B8A_TX_T22_C4_N	[8]
[8]	IO_B8A_RX_T23_F11_P	F11	IO_RX_T23P_8A	IO_TX_T24P_8A	E8	IO_B8A_TX_T24_E8_P	[8]
[8]	IO_B8A_RX_T23_E11_N	E11	IO_RX_T23N_8A	IO_TX_T24N_8A	D7	IO_B8A_TX_T24_D7_N	[8]
[8]	IO_B8A_RX_T25_J7_P	J7	IO_RX_T25P_8A	IO_TX_T26P_8A	B2	IO_B8A_TX_T26_B2_P	[8]
[8]	IO_B8A_RX_T25_H7_N	H7	IO_RX_T25N_8A	IO_TX_T26N_8A	B1	IO_B8A_TX_T26_B1_N	[8]
[8]	IO_B8A_RX_T27_B6_P	B6	IO_RX_T27P_8A	IO_TX_T28P_8A	C3	IO_B8A_TX_T28_C3_P	[8]
[8]	IO_B8A_RX_T27_B5_N	B5	IO_RX_T27N_8A	IO_TX_T28N_8A	B3	IO_B8A_TX_T28_B3_N	[8]
[8]	IO_B8A_RX_T29_K12_P	K12	IO_RX_T29P_8A	IO_TX_T30P_8A	D2	IO_B8A_TX_T30_D2_P	[8]
[8]	IO_B8A_RX_T29_J12_N	J12	IO_RX_T29N_8A	IO_TX_T30N_8A	C2	IO_B8A_TX_T30_C2_N	[8]
[8]	IO_B8A_RX_T31_G12_P	G12	IO_RX_T31P_8A	IO_TX_T32P_8A	E4	IO_B8A_TX_T32_E4_P	[8]
[8]	IO_B8A_RX_T31_G11_N	G11	IO_RX_T31N_8A	IO_TX_T32N_8A	D4	IO_B8A_TX_T32_D4_N	[8]
[8]	IO_B8A_RX_T33_K7_P	K7	IO_RX_T33P_8A	IO_TX_T34P_8A	E3	IO_B8A_TX_T34_E3_P	[8]
[8]	IO_B8A_RX_T33_K8_N	K8	IO_RX_T33N_8A	IO_TX_T34N_8A	E2	IO_B8A_TX_T34_E2_N	[8]
[8]	IO_B8A_RX_T35_G10_P	G10	IO_RX_T35P_8A	IO_TX_T36P_8A	E1		
[8]	IO_B8A_RX_T35_F10_N	F10	IO_RX_T35N_8A	IO_TX_T36N_8A	D1		
[8]	IO_B8A_RX_T37_J10_P	J10	IO_RX_T37P_8A	IO_TX_T38P_8A	E7	LED3#_PL	[7]
[8]	IO_B8A_RX_T37_J9_N	J9	IO_RX_T37N_8A	IO_TX_T38N_8A	E6	LED2#_PL	[7]
[8]	IO_B8A_RX_T39_F9_P	F9	IO_RX_T39P_8A	IO_TX_T40P_8A	G7	LED1#_PL	[7]
[8]	IO_B8A_RX_T39_F8_N	F8	IO_RX_T39N_8A	IO_TX_T40N_8A	F6	LED0#_PL	[7]
[3]	VREF_B8A	B10	VREFB8AN0				

ALTERA_C5ST_SOC_F31_GENERIC
FPGA

FPGA Bank 4A

VCCIO = VCC_IO_B3B_B4A

U200-G

[9]	IO_B4A_RX_B42_AE17_P	AE17	IO_RX_B42P_BDQ1_4A	IO_TX_B41P_BDQ2_4A	AG16	IO_B4A_TX_B41_AG16_P	[9]
[9]	IO_B4A_RX_B42_AF18_N	AF18	IO_RX_B42N_BDQ0_4A	IO_TX_B41N_4A	AG17	IO_B4A_TX_B41_AG17_N	[9]
[9]	IO_B4A_RX_B43_V16_P	V16	IO_RX_B43P_BDQS0_4A	IO_TX_B44P_BODT0_4A	AE16	IO_B4A_TX_B44_AE16_P	[9]
[9]	IO_B4A_RX_B43_W16_N	W16	IO_RX_B43N_BDQS#0_4A	IO_TX_B44N_BDQ3_4A	AF16	IO_B4A_TX_B44_AF16_N	[9]
[9]	IO_B4A_RX_B46_AG21_P	AG21	IO_RX_B46P_BDQ5_4A	IO_TX_B45P_BDQ6_4A	AJ16	IO_B4A_TX_B45_AJ16_P	[9]
[9]	IO_B4A_RX_B46_AH20_N	AH20	IO_RX_B46N_BDQ4_4A	IO_TX_B45N_BODT1_4A	AK16	IO_B4A_TX_B45_AK16_N	[9]
[9]	IO_B4A_CLK2_B47_AA16_P	AA16	IO_RX_B47P_CLK2_4A	IO_TX_B48P_BDM0_4A	AH17	IO_B4A_TX_B48_AH17_P	[9]
[9]	IO_B4A_CLK2_B47_AB17_N	AB17	IO_RX_B47N_CLK2_4A	IO_TX_B48N_BDQ7_4A	AH18	IO_B4A_TX_B48_AH18_N	[9]
[9]	IO_B4A_RX_B50_AJ17_P	AJ17	IO_RX_B50P_BDQ9_4A	IO_TX_B49P_BDQ10_4A	AG18	IO_B4A_TX_B49_AG18_P	[9]
[9]	IO_B4A_RX_B50_AK18_N	AK18	IO_RX_B50N_BDQ8_4A	IO_TX_B49N_GND_4A	AH19	IO_B4A_TX_B49_AH19_N	[9]
[9]	IO_B4A_RX_B51_V17_P	V17	IO_RX_B51P_BDQS1_4A	IO_TX_B52P_BCKE1_4A	AJ19	IO_B4A_TX_B52_AJ19_P	[9]
[9]	IO_B4A_RX_B51_W17_N	W17	IO_RX_B51N_BDQS#1_4A	IO_TX_B52N_BDQ11_4A	AK19	IO_B4A_TX_B52_AK19_N	[9]
[9]	IO_B4A_RX_B54_AF19_P	AF19	IO_RX_B54P_BDQ13_4A	IO_TX_B53P_BDQ14_4A	AJ20	IO_B4A_TX_B53_AJ20_P	[9]
[9]	IO_B4A_RX_B54_AG20_N	AG20	IO_RX_B54N_BDQ12_4A	IO_TX_B53N_BCKE0_4A	AJ21	IO_B4A_TX_B53_AJ21_N	[9]
[9]	IO_B4A_CLK3_B55_AC18_P	AC18	IO_RX_B55P_CLK3_4A	IO_TX_B56P_BDM1_4A	AG23	IO_B4A_TX_B56_AG23_P	[9]
[9]	IO_B4A_CLK3_B55_AD17_N	AD17	IO_RX_B55N_CLK3_4A	IO_TX_B56N_BDQ15_4A	AH24	IO_B4A_TX_B56_AH24_N	[9]
[9]	IO_B4A_RX_B58_AE18_P	AE18	IO_RX_B58P_BDQ17_4A	IO_TX_B57P_BDQ18_4A	AG22	IO_B4A_TX_B57_AG22_P	[9]
[9]	IO_B4A_RX_B58_AE19_N	AE19	IO_RX_B58N_BDQ16_4A	IO_TX_B57N_GND_4A	AH22	IO_B4A_TX_B57_AH22_N	[9]
[9]	IO_B4A_RX_B59_Y17_P	Y17	IO_RX_B59P_BDQS2_4A	IO_TX_B60P_BRESET#_4A	AK21	IO_B4A_TX_B60_AK21_P	[9]
[9]	IO_B4A_RX_B59_AA18_N	AA18	IO_RX_B59N_BDQS#2_4A	IO_TX_B60N_BDQ19_4A	AK22	IO_B4A_TX_B60_AK22_N	[9]
[9]	IO_B4A_RX_B62_AF20_P	AF20	IO_RX_B62P_BDQ21_4A	IO_TX_B61P_BDQ22_4A	AH23	IO_B4A_TX_B61_AH23_P	[9]
[9]	IO_B4A_RX_B62_AF21_N	AF21	IO_RX_B62N_BDQ20_4A	IO_TX_B61N_GND_4A	AJ22	IO_B4A_TX_B61_AJ22_N	[9]
[9]	IO_B4A_RX_B63_Y18_P	Y18	IO_RX_B63P_GND_4A	IO_TX_B64P_BDM2_4A	AK23	IO_B4A_TX_B64_AK23_P	[9]
[9]	IO_B4A_RX_B63_AA19_N	AA19	IO_RX_B63N_GND_4A	IO_TX_B64N_BDQ23_4A	AK24	IO_B4A_TX_B64_AK24_N	[9]
[9]	IO_B4A_RX_B66_AF23_P	AF23	IO_RX_B66P_BDQ25_4A	IO_TX_B65P_BDQ26_4A	AJ24	IO_B4A_TX_B65_AJ24_P	[9]
[9]	IO_B4A_RX_B66_AF24_N	AF24	IO_RX_B66N_BDQ24_4A	IO_TX_B65N_GND_4A	AJ25	IO_B4A_TX_B65_AJ25_N	[9]
[9]	IO_B4A_RX_B67_AC20_P	AC20	IO_RX_B67P_BDQS3_4A	IO_TX_B68P_GND_4A	AJ26	IO_B4A_TX_B68_AJ26_P	[9]
[9]	IO_B4A_RX_B67_AD19_N	AD19	IO_RX_B67N_BDQS#3_4A	IO_TX_B68N_BDQ27_4A	AK26	IO_B4A_TX_B68_AK26_N	[9]
[9]	IO_B4A_RX_B70_AE22_P	AE22	IO_RX_B70P_BDQ29_4A	IO_TX_B69P_BDQ30_4A	AG25	IO_B4A_TX_B69_AG25_P	[9]
[9]	IO_B4A_RX_B70_AE23_N	AE23	IO_RX_B70N_BDQ28_4A	IO_TX_B69N_GND_4A	AH25	IO_B4A_TX_B69_AH25_N	[9]
[9]	IO_B4A_RX_B71_V18_P	V18	IO_RX_B71P_GND_4A	IO_TX_B72P_BDM3_4A	AJ27	IO_B4A_TX_B72_AJ27_P	[9]
[9]	IO_B4A_RX_B71_W19_N	W19	IO_RX_B71N_GND_4A	IO_TX_B72N_BDQ31_4A	AK27	IO_B4A_TX_B72_AK27_N	[9]
[9]	IO_B4A_RX_B74_AD20_P	AD20	IO_RX_B74P_BDQ33_4A	IO_TX_B73P_BDQ34_4A	AK28	IO_B4A_TX_B73_AK28_P	[9]
[9]	IO_B4A_RX_B74_AD21_N	AD21	IO_RX_B74N_BDQ32_4A	IO_TX_B73N_GND_4A	AK29	IO_B4A_TX_B73_AK29_N	[9]
[9]	IO_B4A_RX_B75_Y19_P	Y19	IO_RX_B75P_BDQS4_4A	IO_TX_B76P_GND_4A	AG26	IO_B4A_TX_B76_AG26_P	[9]
[9]	IO_B4A_RX_B75_AA20_N	AA20	IO_RX_B75N_BDQS#4_4A	IO_TX_B76N_BDQ35_4A	AH27	IO_B4A_TX_B76_AH27_N	[9]
[9]	IO_B4A_RX_B78_AC22_P	AC22	IO_RX_B78P_BDQ37_4A	IO_TX_B77P_BDQ38_4A	AF25	IO_B4A_TX_B77_AF25_P	[9]
[9]	IO_B4A_RX_B78_AC23_N	AC23	IO_RX_B78N_BDQ36_4A	IO_TX_B77N_GND_4A	AF26	IO_B4A_TX_B77_AF26_N	[9]
[9]	IO_B4A_RX_B79_AA21_P	AA21	IO_RX_B79P_GND_4A	IO_TX_B80P_BDM4_4A	AD24	IO_B4A_TX_B80_AD24_P	[9]
[9]	IO_B4A_RX_B79_AB21_N	AB21	IO_RX_B79N_GND_4A	IO_TX_B80N_BDQ39_4A	AE24	IO_B4A_TX_B80_AE24_N	[9]
[3]	VREF_B3B_B4A	AK17	VREFB4AN0				

ALTERA_C5ST_SOC_F31_GENERIC
FPGA

FPGA HPS Bank 6A

VCCIO = VCC_1V35

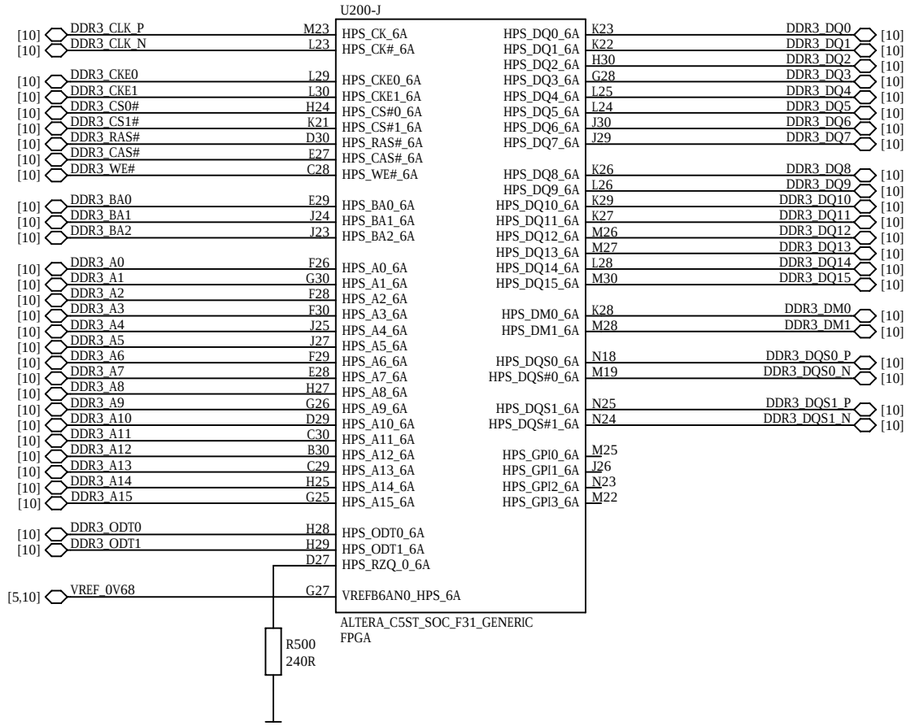

FPGA HPS Bank 6B

VCCIO = VCC_1V35

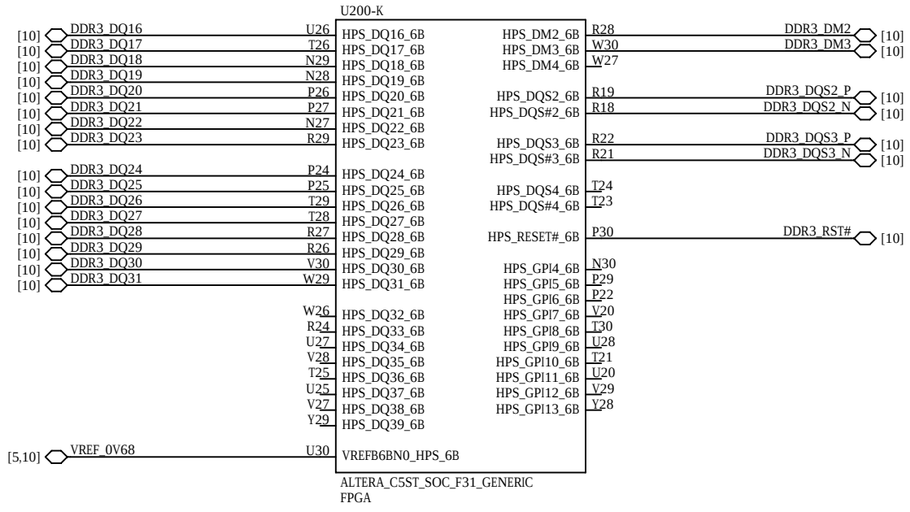

FPGA HPS Bank 7

VCCIO = VCC_CFG_HPS

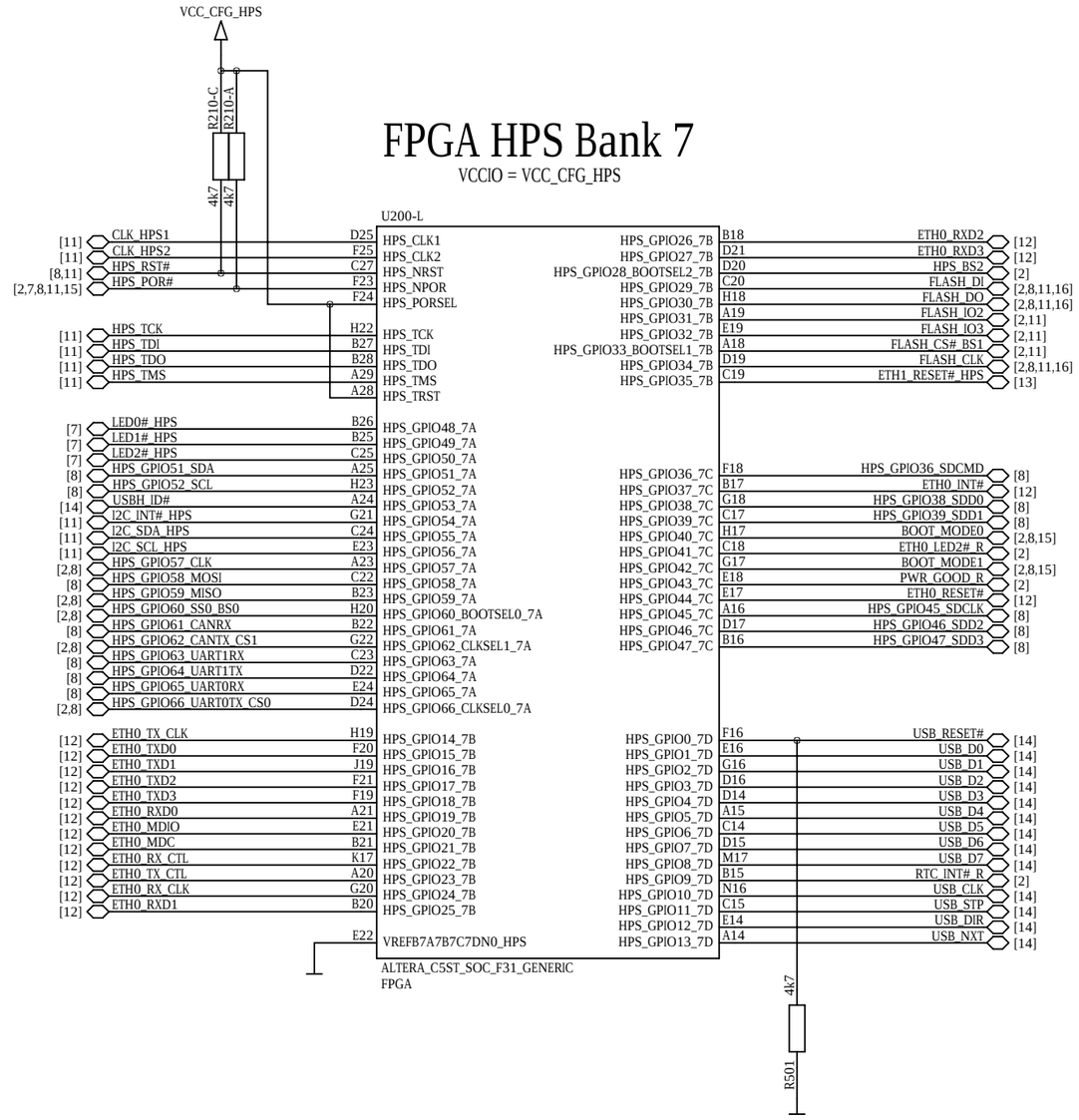

ENCLUSTRA	Copyright © 2018 by Enclustra GmbH	Sheet Name 5_FPGA_BANK6A/6B/7	Customer No 0000	Revision R1.4	DNE = do not equip	Confidential	
	Company Enclustra FPGA Solution Center	Project Mercury SA2	Project No 408	Designed MHEI	Date 13 Apr 2021	Sheet/sheets 5 / 22	

FPGA Ground

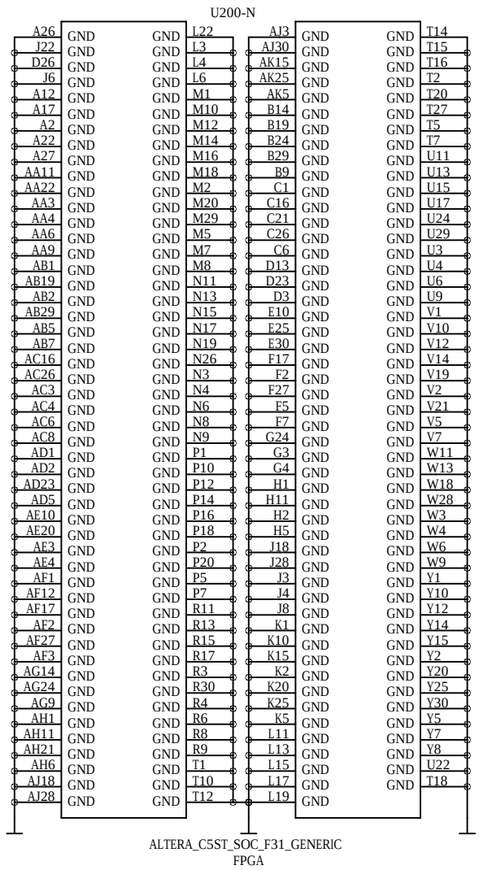

FPGA Power

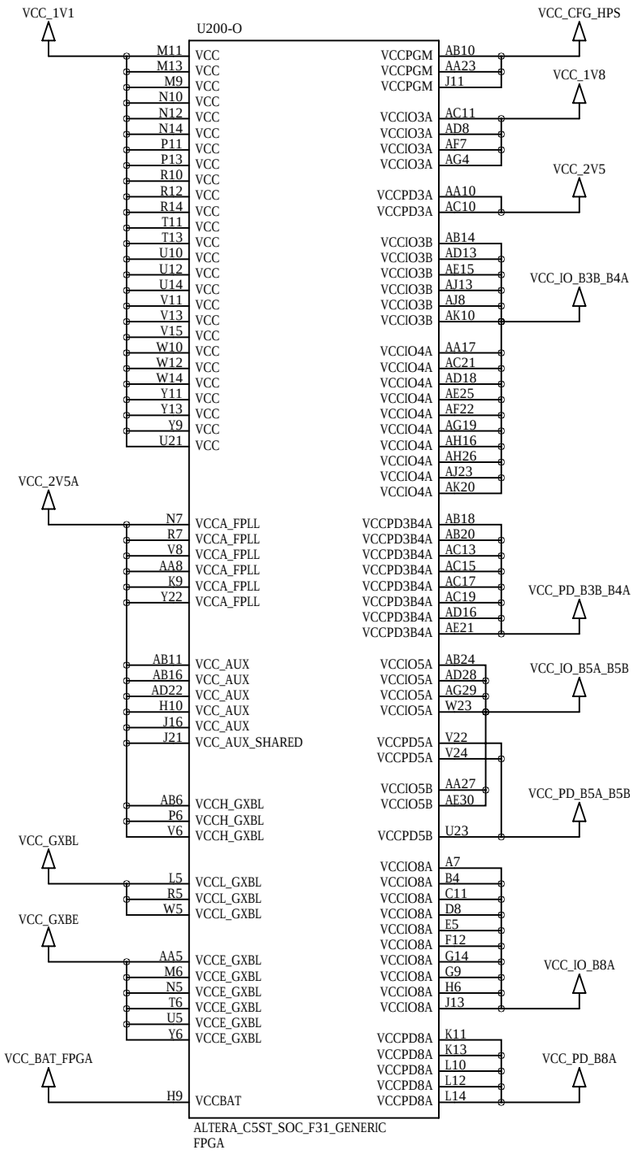

FPGA HPS Power

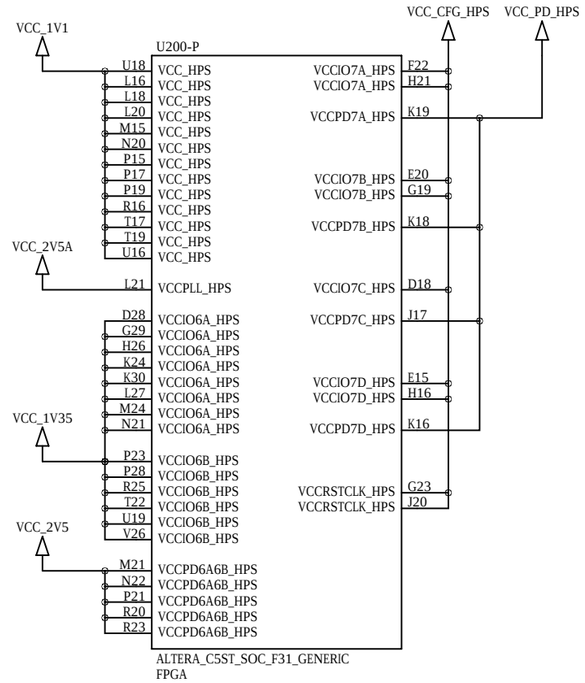

FPGA Battery Voltage

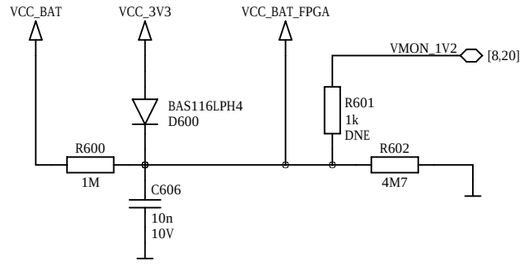

FPGA PLL Filters

not included in free schematics

This part is intentionally left blank.

FPGA MGT Power Generation and Filters

not included in user schematics

This part is intentionally left blank.

ENCLUSTRA	Copyright © 2018 by Enclustra GmbH	Sheet Name 6_FPGA_POWER	Customer No 0000	Revision R1.4	DNE = do not equip	Confidential	
	Company Enclustra FPGA Solution Center	Project Mercury SA2	Project No 408	Designed MHEI	Date 13 Apr 2021	Sheet/sheets 6 / 22	

FPGA Decoupling

not included in user schematics

This part is intentionally left blank.

User LEDs

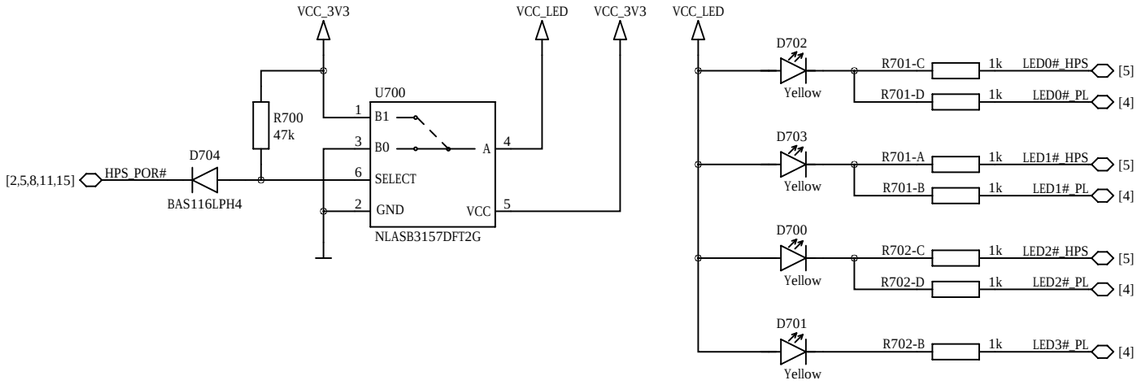

ENCLUSTRA	Copyright © 2018 by Enclustra GmbH	Sheet Name 7_FPGA_DECOUPLING_LEDS	Customer No 0000	Revision R1.4	DNE = do not equip	Confidential	
	Company Enclustra FPGA Solution Center	Project Mercury SA2	Project No 408	Designed MHEI	Date 13 Apr 2021	Sheet/sheets 7 / 22	

Module Connector A

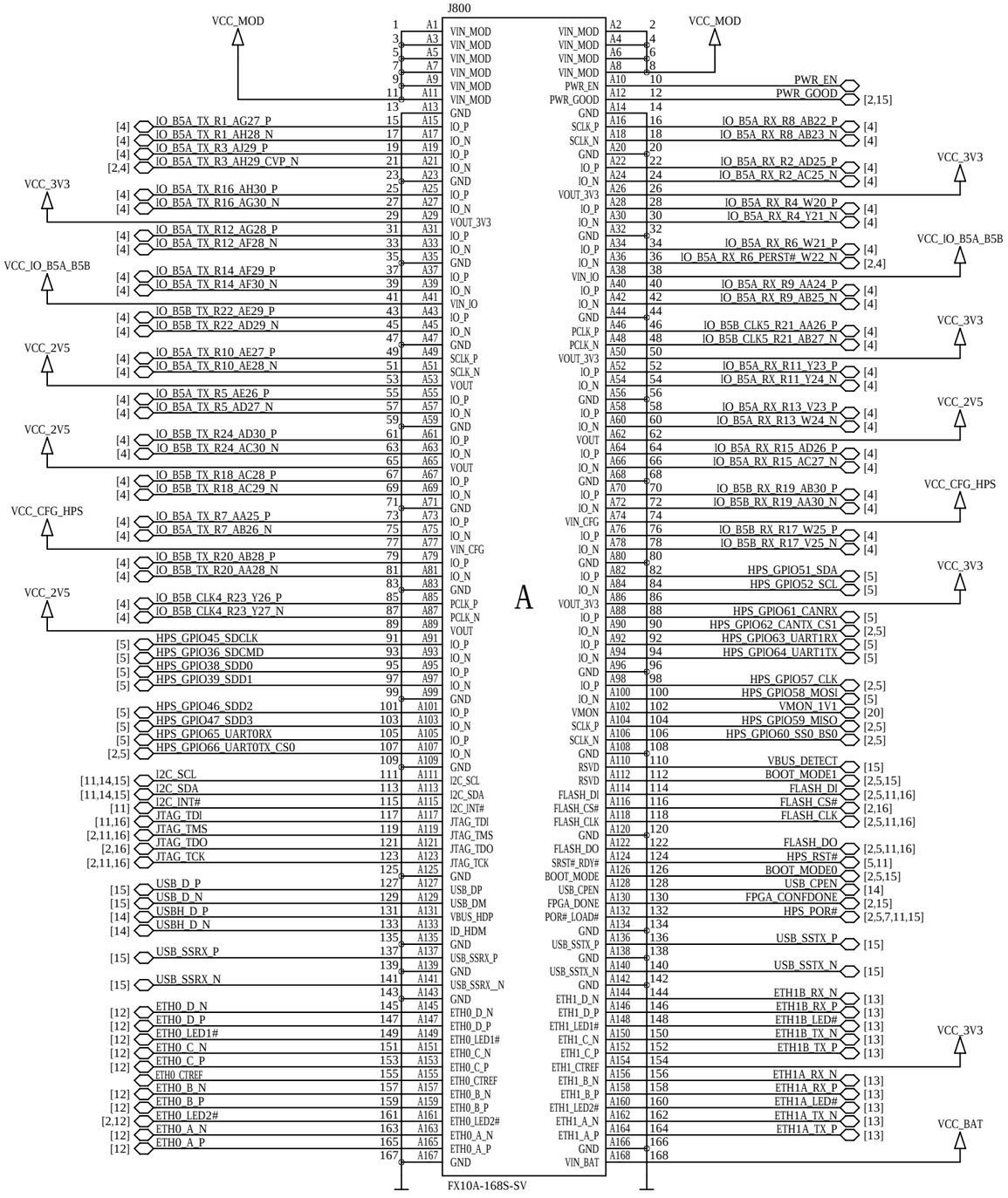

Module Connector B

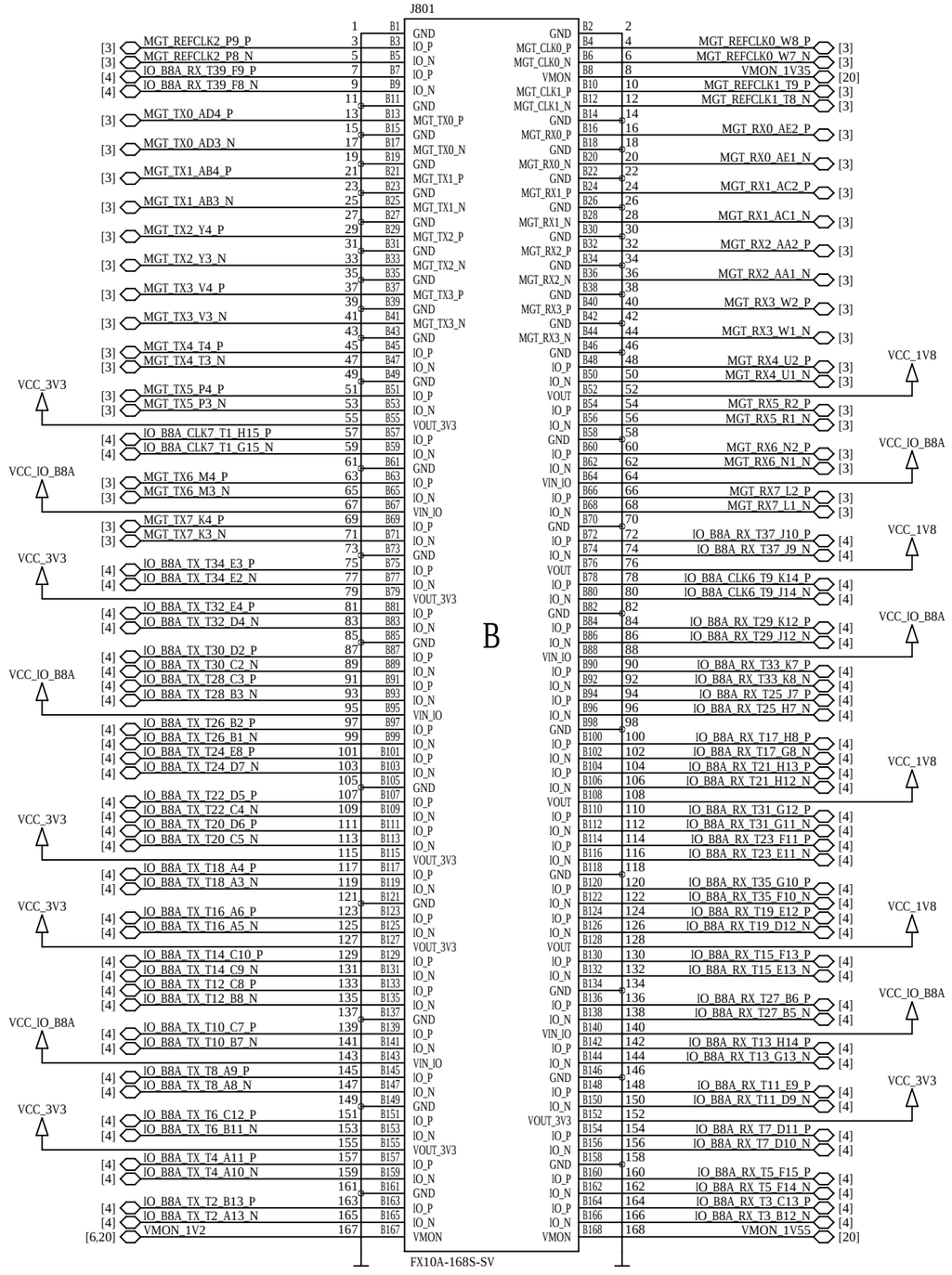

ENCLUSTRA	Copyright © 2018 by Enclustra GmbH	Sheet Name 8_MODULE_CONNECTORS_A/B	Customer No 0000	Revision R1.4	DNE = do not equip	Confidential	
	Company Enclustra FPGA Solution Center	Project Mercury SA2	Project No 408	Designed MHEI	Date 13 Apr 2021	Sheet/sheets 8 / 22	

Module Connector C

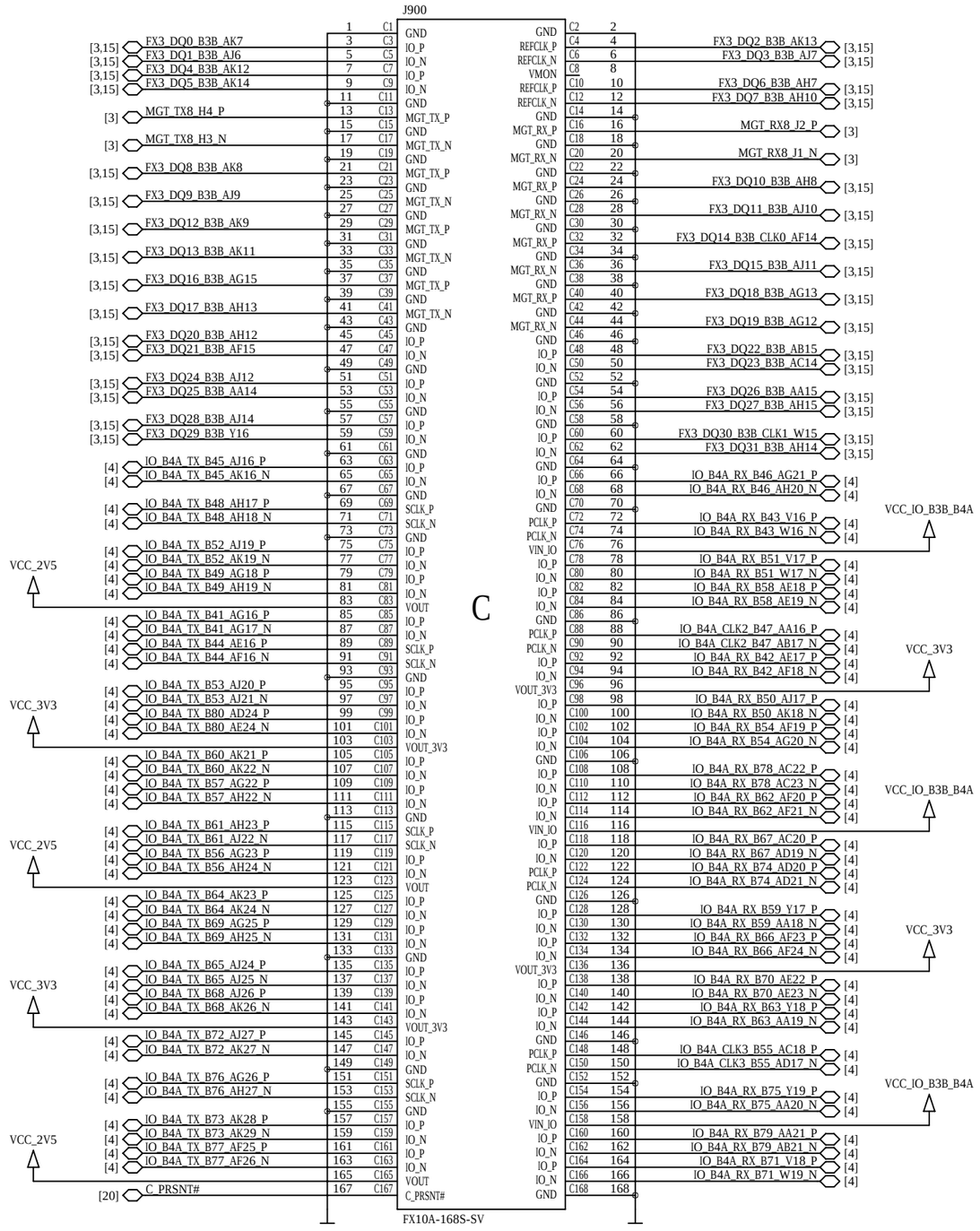

ENCLUSTRA	Copyright © 2018 by Enclustra GmbH	Sheet Name 9_MODULE_CONNECTOR_C	Customer No 0000	Revision R1.4	DNE = do not equip	Confidential
	Company Enclustra FPGA Solution Center	Project Mercury SA2	Project No 408	Designed MHEI	Date 13 Apr 2021	Sheet/sheets 9 / 22

HPS DDR3L SDRAM

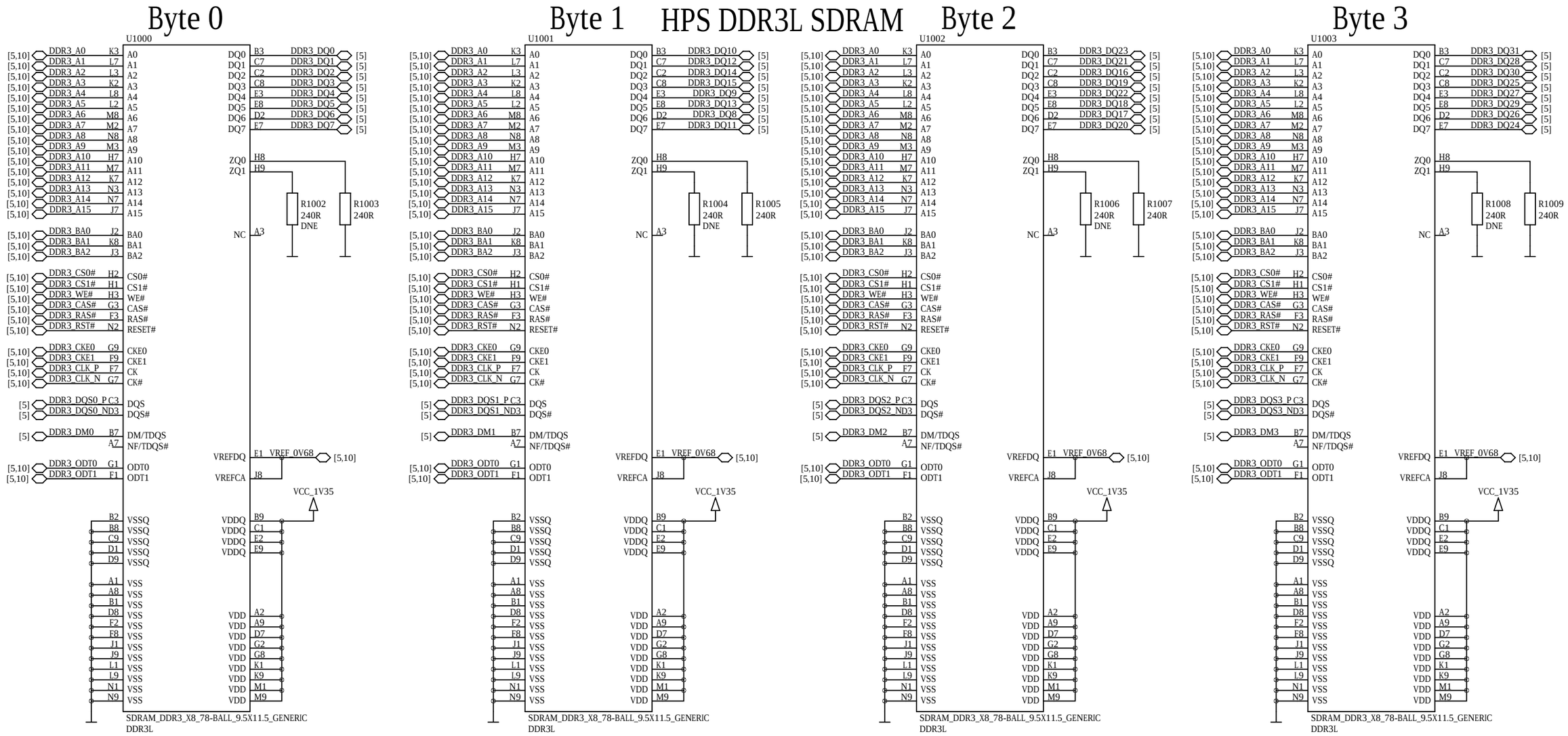

DDR3L Termination

not included in user schematics

This part is intentionally left blank.

HPS DDR3L Decoupling

not included in user schematics

This part is intentionally left blank.

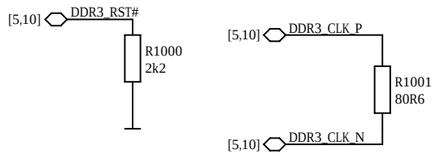

ENCLUSTRA	Copyright	© 2018 by Enclustra GmbH	Sheet Name	10_HPS_DDR3L_SDRAM	Customer No	0000	Revision	R1.4	DNE = do not equip	Confidential
	Company	Enclustra FPGA Solution Center	Project	Mercury SA2	Project No	408	Designed	MHEI	Date 13 Apr 2021	Sheet/sheets 10 / 22

Clock Oscillator

only one can be mounted

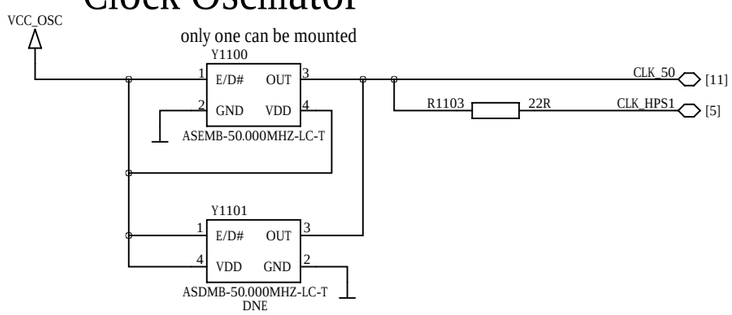

Clock Divider

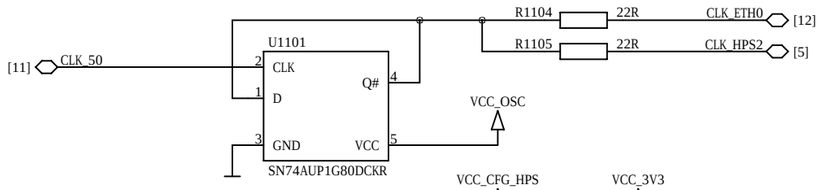

I2C Level Shifter

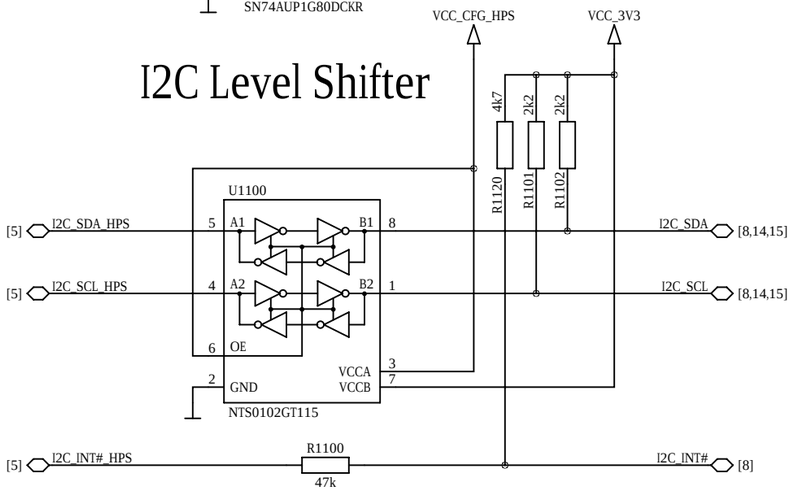

Oscillator Power Filter

not included in user schematics

This part is intentionally left blank.

HPS JTAG Connector

optional

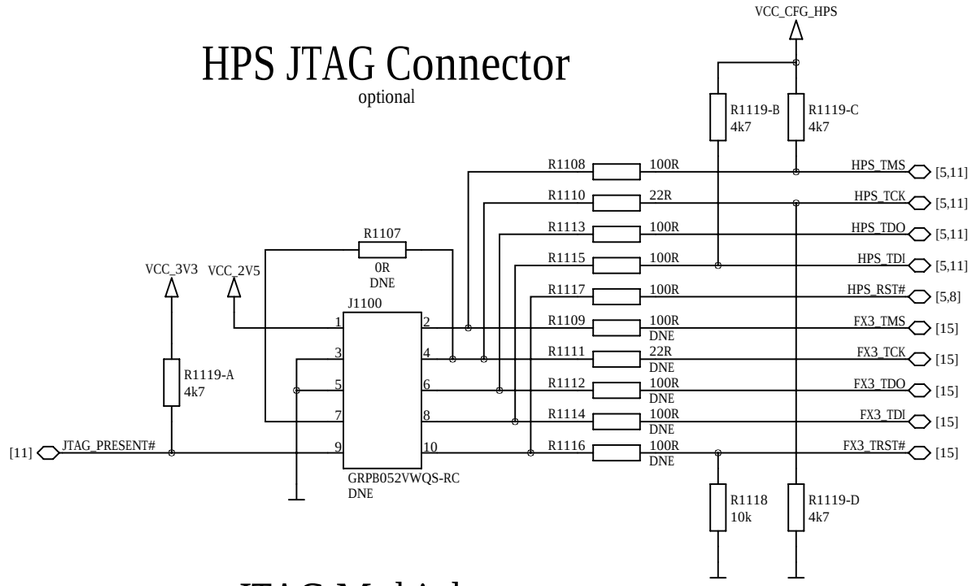

JTAG Multiplexer

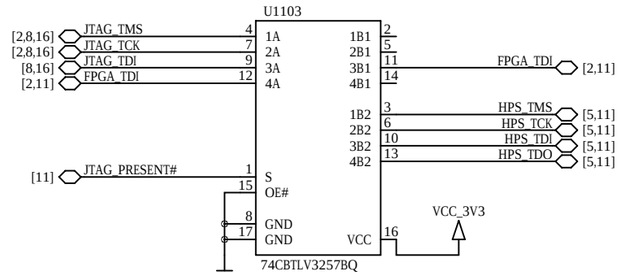

Quad SPI Flash

pin compatible with Altera EPCQA series

Altera EPCQA required for AS boot mode

Altera requires VCC_CFG_HPS = 3.3V

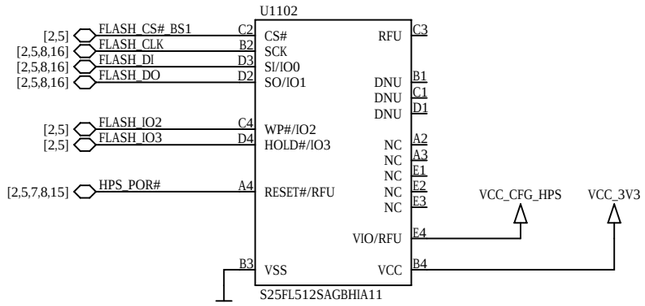

ENCLUSTRA	Copyright	© 2018 by Enclustra GmbH	Sheet Name	11_FLASH_JTAG_OSCILLATOR	Customer No	0000	Revision	R1.4	DNE = do not equip	Confidential
	Company	Enclustra FPGA Solution Center	Project	Mercury SA2	Project No	408	Designed	MHEI	Date 13 Apr 2021	Sheet/sheets 11 / 22

Gigabit Ethernet PHY

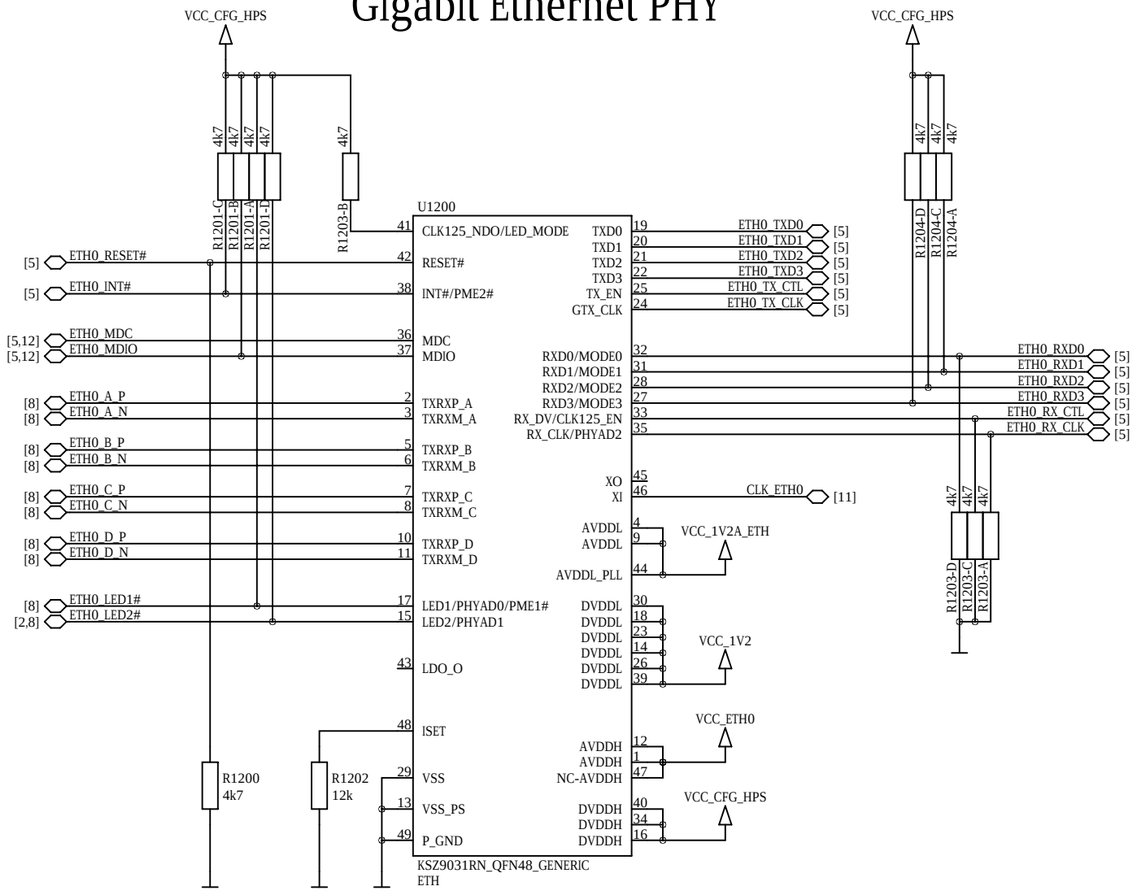

MODE<3:0> = 1110 -> RGMII, all capabilities
LED_Mode Pull up = Single LED
PhyAddress <2:0> = 011 -> 3
LED1 and LED2 are active low

MDIO Level Shifter

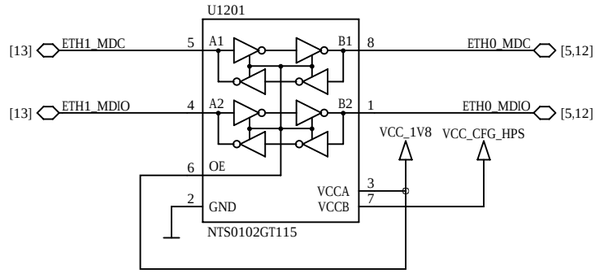

Ethernet Supply Filters

not included in user schematics

This part is intentionally left blank.

R1204-B
4k7

ENCLUSTRA	Copyright © 2018 by Enclustra GmbH	Sheet Name 12_GIGABIT_ETHERNET_PHY	Customer No 0000	Revision R1.4	DNE = do not equip	Confidential	
	Company Enclustra FPGA Solution Center	Project Mercury SA2	Project No 408	Designed MHEI	Date 13 Apr 2021	Sheet/sheets 12 / 22	

Fast Ethernet PHY A

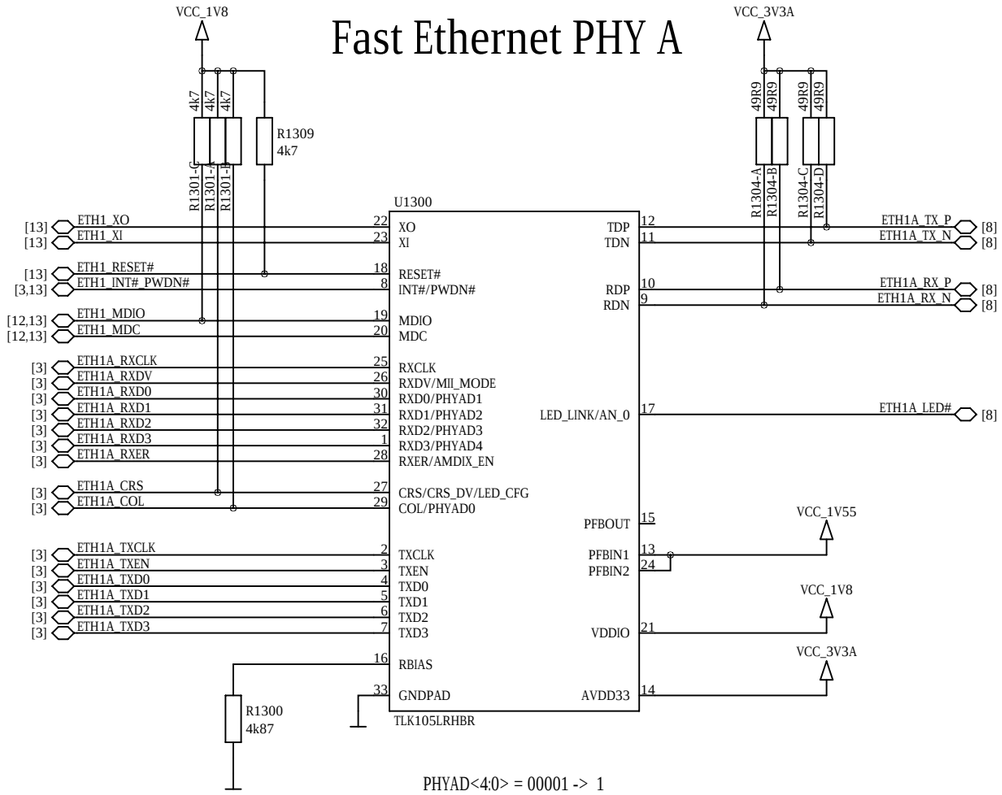

PHYAD<4:0> = 00001 -> 1
LED_CFG = 1 -> LED mode 1 (Link LED)
AMDIX_EN = 1 -> Auto MDI-X enabled
AN_0 = 1 -> auto-negotiation enabled
MII_MODE = 0 -> MII mode

Fast Ethernet PHY B

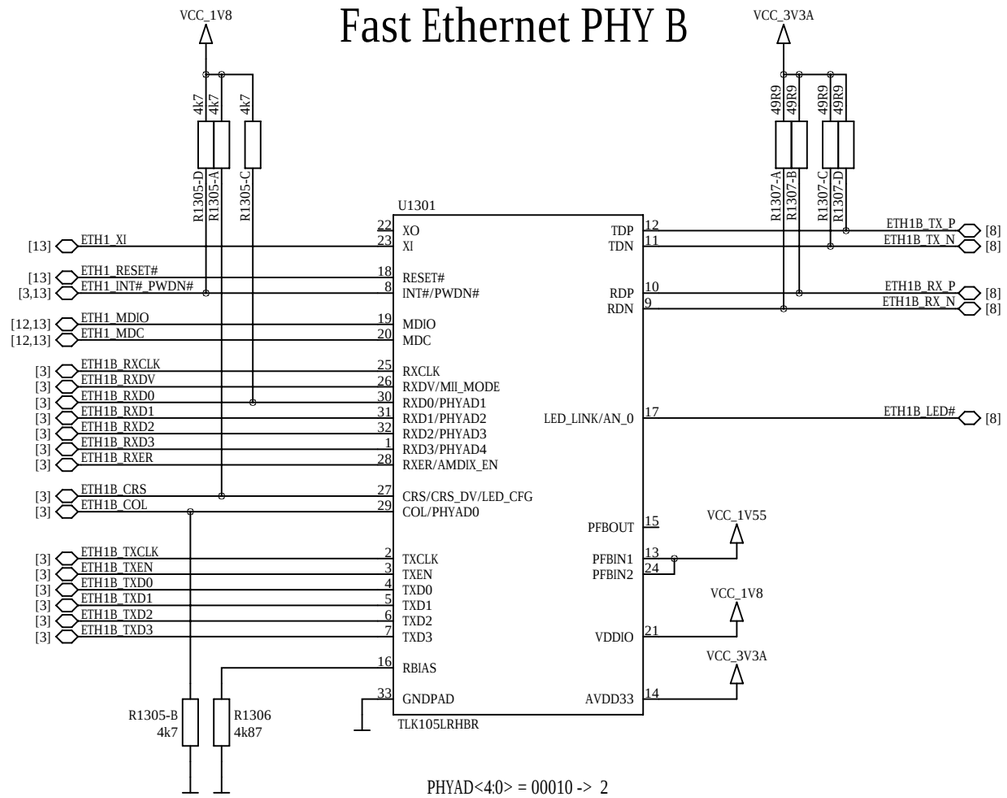

PHYAD<4:0> = 00010 -> 2
LED_CFG = 1 -> LED mode 1 (Link LED)
AMDIX_EN = 1 -> Auto MDI-X enabled
AN_0 = 1 -> auto-negotiation enabled
MII_MODE = 0 -> MII mode

Fast Ethernet Reset

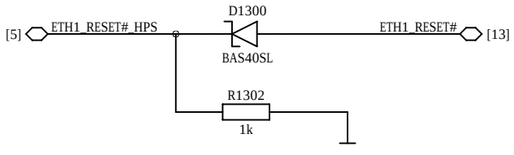

Fast Ethernet Clock

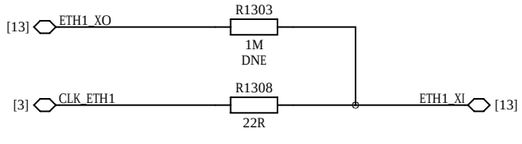

Fast Ethernet Decoupling

not included in user schematics

This part is intentionally left blank.

Fast Ethernet Power Filter

not included in user schematics

This part is intentionally left blank.

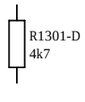

USB 2.0 PHY

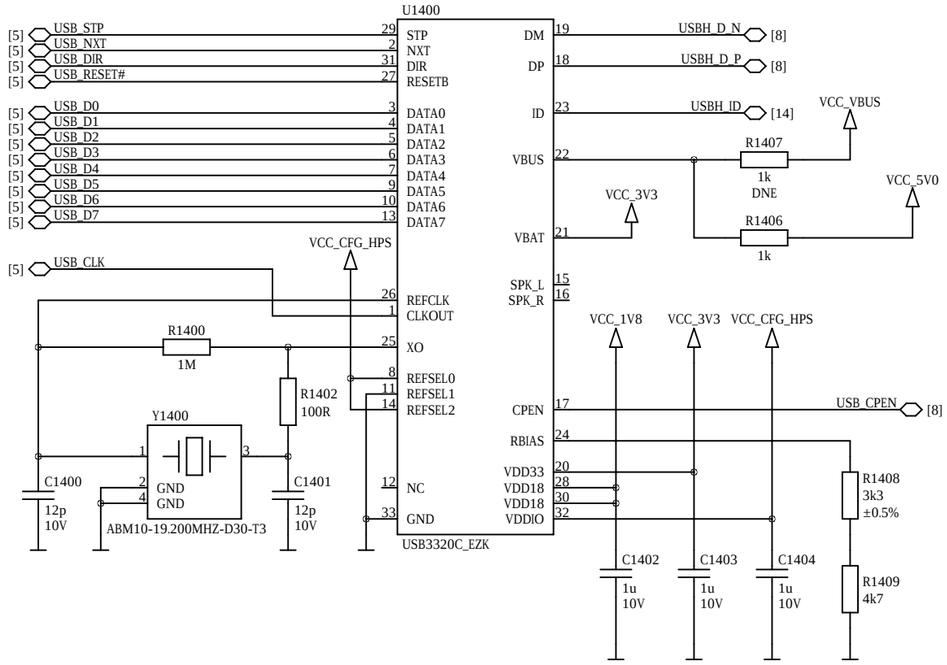

Real-time Clock

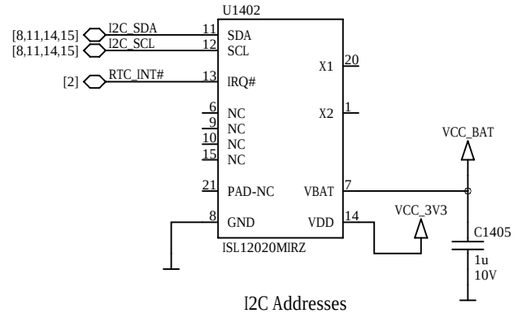

I2C Addresses

RTC registers: 1 1 0 1 1 1 1 Rw

User SRAM: 1 0 1 0 1 1 1 Rw

Secure EEPROMs

for Enclustra use only

only one of the EEPROMs can be mounted

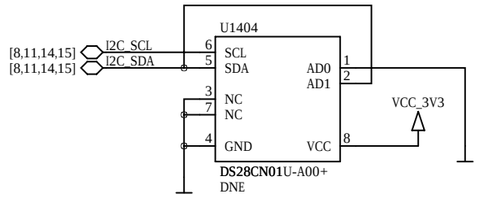

I2C Address: 1 0 1 1 1 0 0 Rw

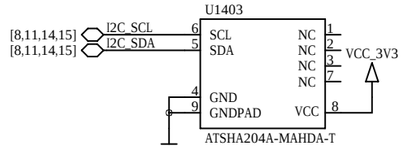

I2C Address: 1 1 0 0 1 0 0 Rw

USB 2.0 ID Level Shifter

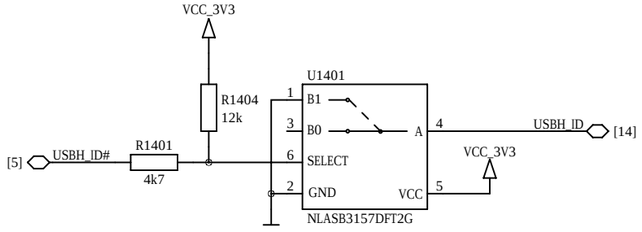

ENCLUSTRA	Copyright © 2018 by Enclustra GmbH	Sheet Name 14_USB2_PHY_RTC_EEPROM	Customer No 0000	Revision R1.4	DNE = do not equip	Confidential	
	Company Enclustra FPGA Solution Center	Project Mercury SA2	Project No 408	Designed MHEI	Date 13 Apr 2021	Sheet/sheets 14 / 22	

USB 3.0 Device Controller (Cypress FX3)

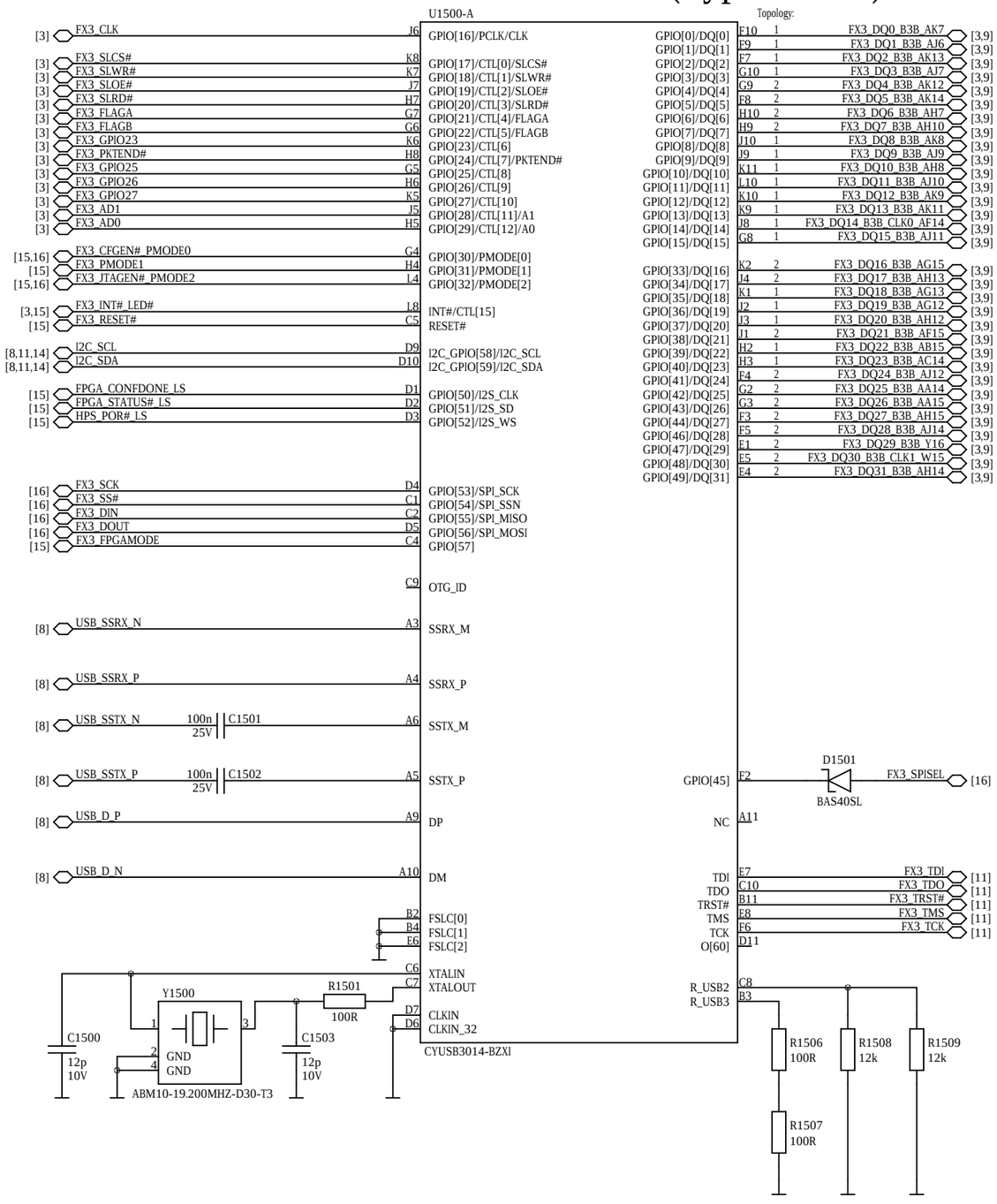

FX3 Level Shifters

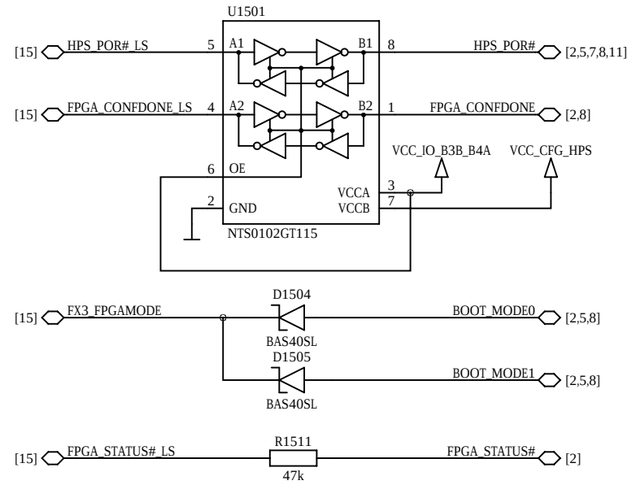

FX3 LED

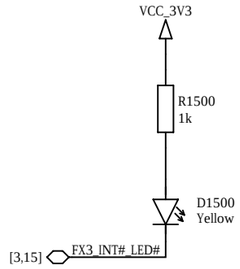

USB 3.0 VBUS Detect

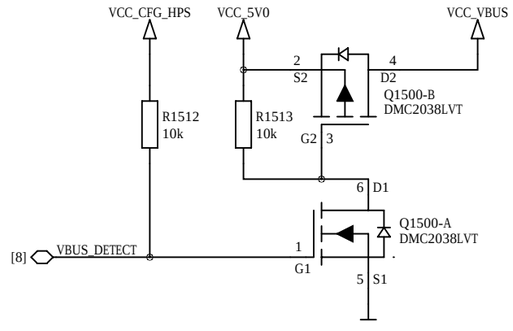

FX3 Boot Mode

SPI boot mode enabled with USB fall back

short R1608 to prevent FX3 to boot from SPI flash

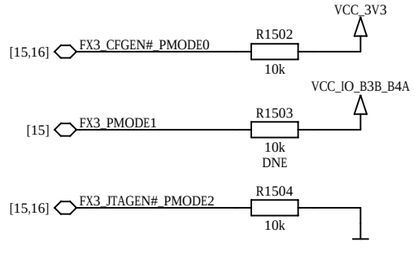

FX3 Reset

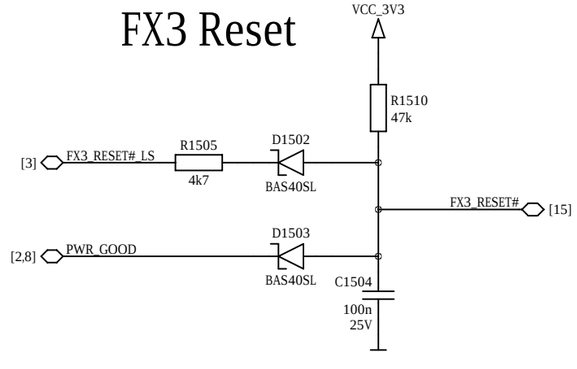

ENCLUSTRA	Copyright	© 2018 by Enclustra GmbH	Sheet Name	15_USB3_DEVICE_CONTROLLER	Customer No	0000	Revision	R1.4	DNE = do not equip	Confidential
	Company	Enclustra FPGA Solution Center	Project	Mercury SA2	Project No	408	Designed	MHEI	Date 13 Apr 2021	Sheet/sheets 15 / 22

FX3 SPI Multiplexers

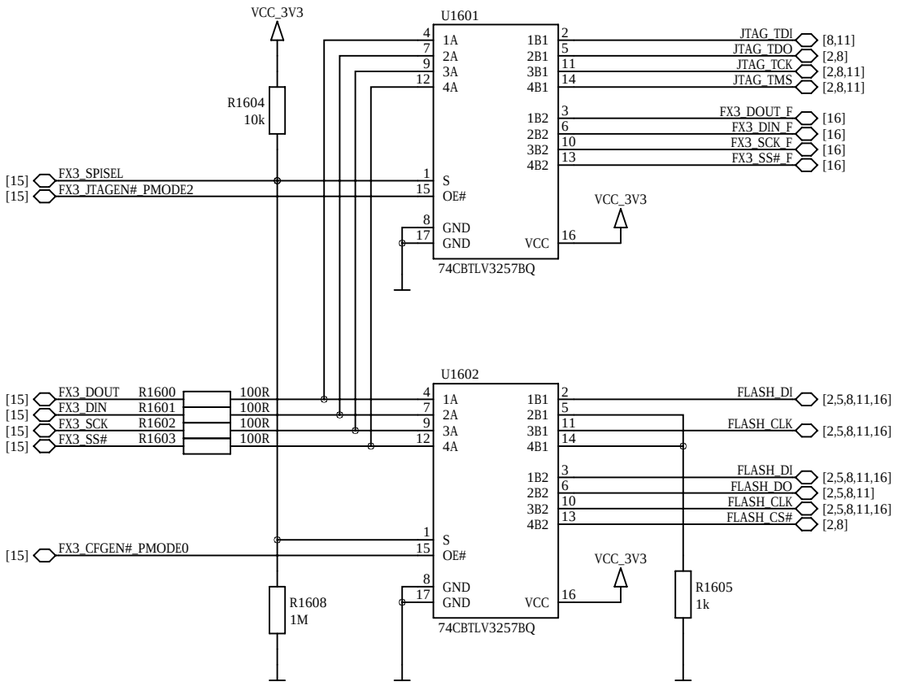

USB 3.0 Device Controller Power

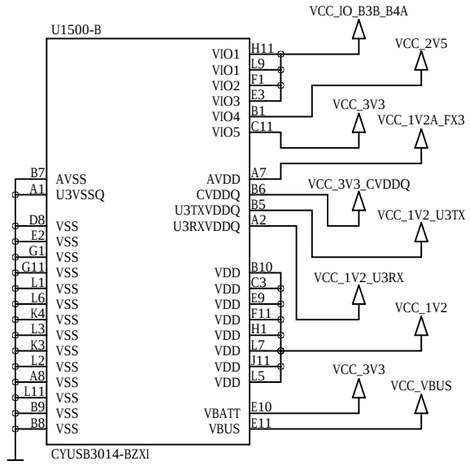

VIO1: GPIO[0..32], INT#
VIO2: GPIO[33..45]
VIO3: GPIO[46..52]
VIO4: GPIO[53..57] (SPI)
VIO5: GPIO[58..59] (I2C), JTAG

FX3 Power Filters

not included in user schematics

This part is intentionally left blank.

FX3 Decoupling

not included in user schematics

This part is intentionally left blank.

FX3 SPI Flash

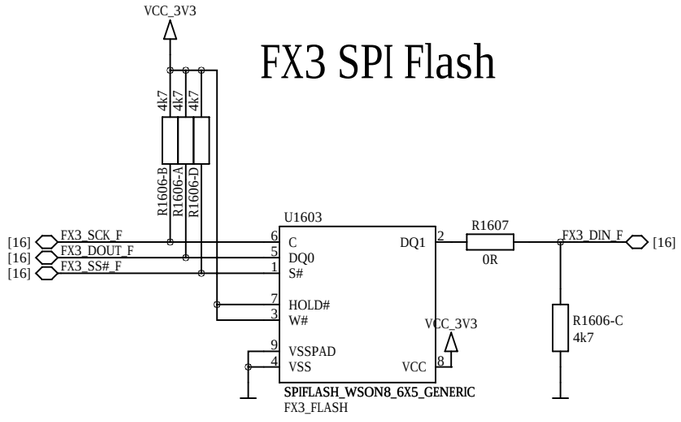

DC / DC Converter 3.3V 9A 5%

not included in user schematics

This part is intentionally left blank.

Supported Voltage Ranges

Power Rail	Direction	Range	Tolerance
VCC_MOD	input	5 - 15V	±5%
VCC_CFG_HPS	input	1.8V, 2.5 - 3.3V	±5%
VCC_IO_B3B_B4A	input	1.8 - 3.3V	±5%
VCC_IO_B5A_B5B	input	1.2 - 3.3V	±5%
VCC_IO_B8A	input	1.8 - 3.3V	±5%
VCC_BAT	input	2.0 - 3.6V	-
VCC_3V3	output	3.3V	±5%
VCC_2V5	output	2.5V	±5%
VCC_1V8	output	1.8V	±5%

DC / DC Converter 1.1V 9A 3%

not included in user schematics

This part is intentionally left blank.

Input Power Filter

not included in user schematics

This part is intentionally left blank.

LDO 5.0V 0.15A

not included in user schematics

This part is intentionally left blank.

Dual DC/DC Converter

channel 2: 1.35V 1.5A 5%
channel 1: 1.2V 1A 3%
not included in user schematics

This part is intentionally left blank.

Dual DC/DC Converter

channel 2: 2.5V 1.5A 5%
channel 1: 1.8V 1A 5%
not included in user schematics

This part is intentionally left blank.

LDO 1.55V 0.15A

not included in user schematics

This part is intentionally left blank.

DDR3L Termination Voltage Regulator

not included in user schematics

This part is intentionally left blank.

HPS VREF DDR3L

not included in user schematics

This part is intentionally left blank.

Pre-Driver Voltage Generation

not included in user schematics

This part is intentionally left blank.

Voltage Monitoring

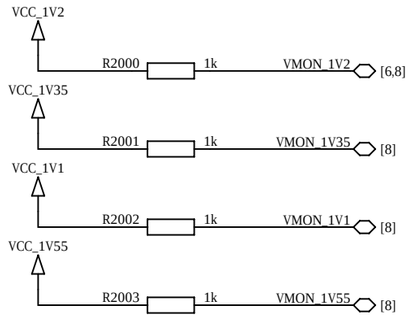

Power Decoupling

not included in user schematics

This part is intentionally left blank.

Reference Voltage Generation

not included in user schematics

This part is intentionally left blank.

IO Voltage Generation

when C connector is not present on base board

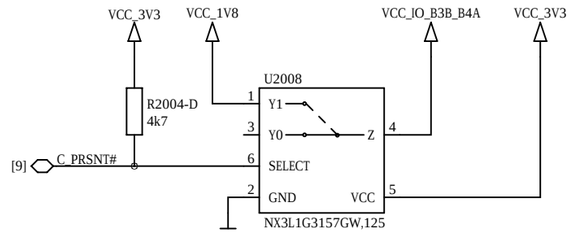

ENCLUSTRA	Copyright	© 2018 by Enclustra GmbH	Sheet Name	20_POWER_PREDRIVER_DECOUPLING	Customer No 0000	Revision R1.4	DNE = do not equip	Confidential
	Company	Enclustra FPGA Solution Center	Project	Mercury SA2	Project No 408	Designed MHEI	Date 13 Apr 2021	Sheet/sheets 20 / 22

Module Mounting Holes M3

Z2102

ME-MOUNTING-HOLES_BOARD-73.8X54

FPGA Heat Sink

optional

Super-Grip

M2101

ATS-X50310P-C1-R0

DNE

Fiducials

FID2102 Fiducial 1mm round

FID2106 Fiducial 1mm round

FID2110 Fiducial 1mm round

FID2103 Fiducial 1mm round

FID2107 Fiducial 1mm round

FID2111 Fiducial 1mm round

Panel Fiducials

FID2100 Fiducial 1.6mm round

FID2104 Fiducial 1.6mm round

FID2108 Fiducial 1.6mm round

FID2112 Fiducial 1.6mm round

FID2101 Fiducial 1.6mm round

FID2105 Fiducial 1.6mm round

FID2109 Fiducial 1.6mm round

FID2113 Fiducial 1.6mm round

Indication

Z2106 1mm square

Z2107 1mm square

PCB & Logo & Pin-1

P2100

ME-SA2-A

Z2105 LOGO

Enclustra (9.8x1.2mm)

Z2108 KEEPOUT

EN-SN

Z2104 Text 0

Z2109 Text 1

Z2110 Text 2

Z2101 Text 3

Z2103 Text Mercury SA2

Screws M2

M2100

01.53.121

DNE

M2102

01.53.121

DNE

ENCLUSTRA	Copyright	© 2018 by Enclustra GmbH	Sheet Name	21_MECHANICS	Customer No	0000	Revision	R1.4	DNE = do not equip	Confidential
	Company	Enclustra FPGA Solution Center	Project	Mercury SA2	Project No	408	Designed	MHEI	Date 13 Apr 2021	Sheet/sheets 21 / 22

Component Variants

FPGA	DDR3L				Ethernet PHY	FX3_FLASH	L2U2
Part U200A 5CSXFC5D6F31C8N EN100995	Part U1000A:1 NT5CC512M8DN-DII EN101877	Part U1001A:1 NT5CC512M8DN-DII EN101877	Part U1002A:1 NT5CC512M8DN-DII EN101877	Part U1003A:1 NT5CC512M8DN-DII EN101877	Part U1200A KSZ9031RNXIA EN101934	Part U1603:1 MX25V1635FZNI EN101997	Part L1801:1 2u2 EN101850
Part U200B 5CSXFC5D6F31I7N EN100996	Part U1000A:2 MT41K512M8RH-125IT:E EN100252	Part U1001A:2 MT41K512M8RH-125IT:E EN100252	Part U1002A:2 MT41K512M8RH-125IT:E EN100252	Part U1003A:2 MT41K512M8RH-125IT:E EN100252	Part U1200B KSZ9031RNXCA EN100202	Part U1603:2 AT25SF161-MHD-T EN101939	Part L1801:2 2u2 EN101849
Part U200C 5CSTFD6D5F31C8N EN101179	Part U1000A:3 K4B4G0846D-BMK0 EN101656	Part U1001A:3 K4B4G0846D-BMK0 EN101656	Part U1002A:3 K4B4G0846D-BMK0 EN101656	Part U1003A:3 K4B4G0846D-BMK0 EN101656		Part U1603:3 IS25LP016D-JKLE EN101998	Part L1802:1 2u2 EN101850
Part U200D 5CSTFD6D5F31I7N EN101060	Part U1000B:1 NT5CC512M8CN-DI EN101182	Part U1001B:1 NT5CC512M8CN-DI EN101182	Part U1002B:1 NT5CC512M8CN-DI EN101182	Part U1003B:1 NT5CC512M8CN-DI EN101182			Part L1802:2 2u2 EN101849
	Part U1000B:2 MT41K512M8RH-125:E EN101181	Part U1001B:2 MT41K512M8RH-125:E EN101181	Part U1002B:2 MT41K512M8RH-125:E EN101181	Part U1003B:2 MT41K512M8RH-125:E EN101181			Part L1901:1 2u2 EN101850
	Part U1000C:1 NT5CC256M8IN-DII EN101432	Part U1001C:1 NT5CC256M8IN-DII EN101432	Part U1002C:1 NT5CC256M8IN-DII EN101432	Part U1003C:1 NT5CC256M8IN-DII EN101432			Part L1901:2 2u2 EN101849
	Part U1000D:1 NT5CC256M8IN-DI EN101022	Part U1001D:1 NT5CC256M8IN-DI EN101022	Part U1002D:1 NT5CC256M8IN-DI EN101022	Part U1003D:1 NT5CC256M8IN-DI EN101022			Part L1902:1 2u2 EN101850
	Part U1000D:2 MT41K256M8DA-125:K EN100251	Part U1001D:2 MT41K256M8DA-125:K EN100251	Part U1002D:2 MT41K256M8DA-125:K EN100251	Part U1003D:2 MT41K256M8DA-125:K EN100251			Part L1902:2 2u2 EN101849

Assembly Variants

Assembly Variant	FPGA	DDR3L	Ethernet PHY	FX3_FLASH	L2U2
Variant EN101007:0 ME-SA2-C5-8C-D10-R1	Option EN101007:1 FPGA EN100995	Option EN101007:2 DDR3L EN101022	Option EN101007:3 ETH EN101934	Option EN101007:4 FX3_FLASH EN101997	Option EN101007:5 L2U2 EN101850
Variant EN101008:0 ME-SA2-C5-7I-D10-R1	Option EN101008:1 FPGA EN100996	Option EN101008:2 DDR3L EN101432	Option EN101008:3 ETH EN101934	Option EN101008:4 FX3_FLASH EN101997	Option EN101008:5 L2U2 EN101850
Variant EN101009:0 ME-SA2-D6-8C-D11-R1	Option EN101009:1 FPGA EN101179	Option EN101009:2 DDR3L EN101182	Option EN101009:3 ETH EN101934	Option EN101009:4 FX3_FLASH EN101997	Option EN101009:5 L2U2 EN101850
Variant EN101010:0 ME-SA2-D6-7I-D11-R1	Option EN101010:1 FPGA EN101060	Option EN101010:2 DDR3L EN101656	Option EN101010:3 ETH EN101934	Option EN101010:4 FX3_FLASH EN101997	Option EN101010:5 L2U2 EN101850