Enclustra User Schematic

Mercury+ XU1 Revision 5.0

Disclaimer

User schematics do not include proprietary Enclustra design elements, such as power supply circuits.
These circuits use optimized designs which are extremely compact and remain proprietary to Enclustra.
The user manual provides all necessary information to use the module and its interfaces.

User schematics are provided after purchase of Enclustra hardware, and may also be provided in certain cases before purchase, to assist in product evaluation.
No part of the schematics may be copied or modified without written permission from Enclustra.

Full schematics, including a full bill-of-materials, may be available through the purchase of a hardware licence for the product in question.
Please contact Enclustra Sales for more information.

Note: DNE = Do Not Equip (parts not equipped by default)

© 2023 by Enclustra FPGA Solutions

Mercury+ XU1 SoC Module

Revision 5.0

Sheet 1: Cover
Sheet 2: SoC FPGA Configuration
Sheet 3: SoC FPGA MGT Banks | User LEDs
Sheet 4: SoC FPGA IO Banks
Sheet 5: SoC FPGA PS Banks
Sheet 6: SoC FPGA Power
Sheet 7: Power Decoupling
Sheet 8: Module Connectors A | B
Sheet 9: Module Connector C
Sheet 10: DDR4 SDRAM Bytes 0-3
Sheet 11: DDR4 SDRAM Bytes 4-8 (ECC)
Sheet 12: Oscillators
Sheet 13: Gigabit Ethernet PHYs
Sheet 14: USB 2.0 PHYs
Sheet 15: Level Shifters | Secure EEPROM
Sheet 16: eMMC Flash | QSPI Flash
Sheet 17: Power 0.85V/0.9V | 3.3V | 1.2V | 5.0V
Sheet 18: Power 0.9V | 2.5V | VTT
Sheet 19: Power 1.8V | 0.85V
Sheet 20: Mechanics
Sheet 21: Assembly Variants
Sheet 21: Component Assembly
Sheet 22: Component Assembly

Boot Mode Selection

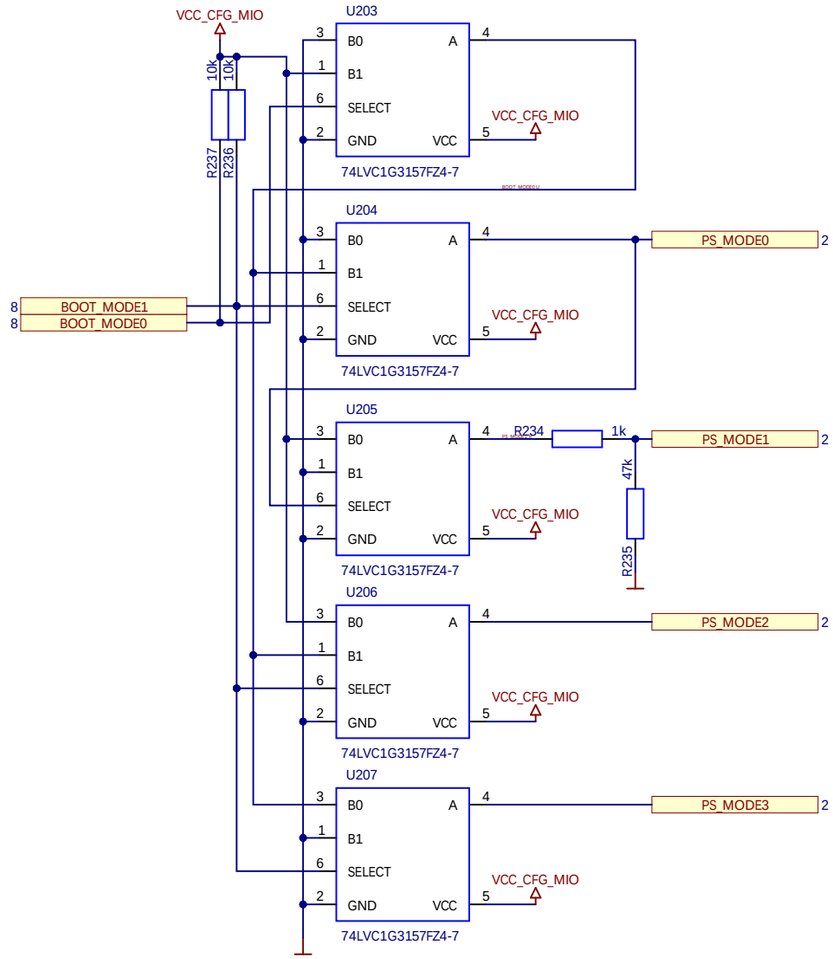

IO / MGT Selection

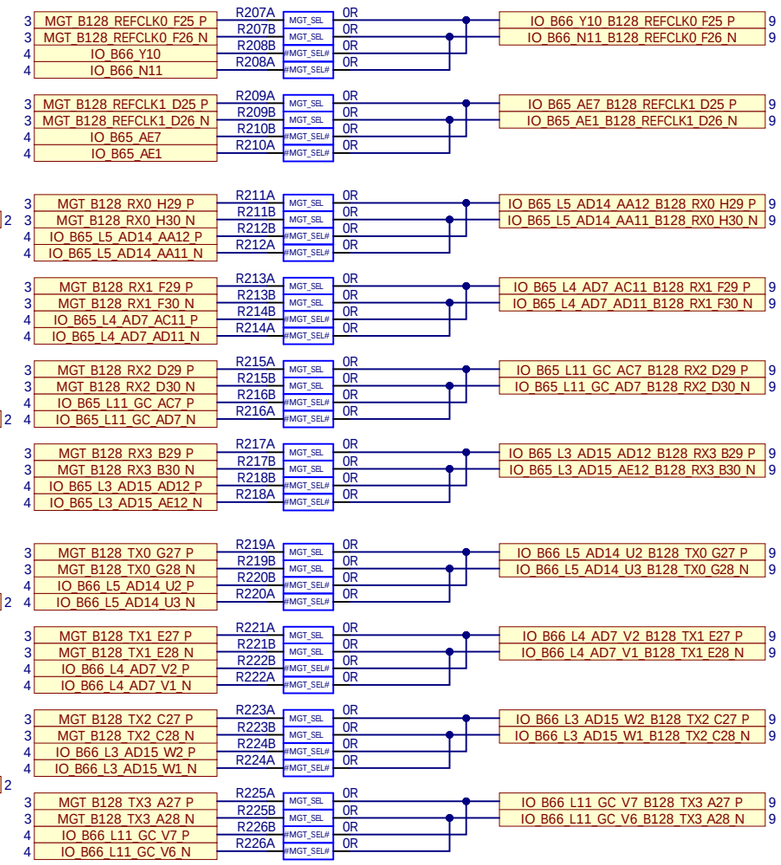

Boot Modes

	Boot Mode		Mode Straps	Configuration	
	1	0	PS_MODE	PL Boot	PS Boot
eMMC Mode	0	0	0110	PS	eMMC
SD Mode LS not supported	0	1	1110	PS	SDIO with level shifter
QSPI Mode	1	0	0010	PS	QSPI
SD Mode default	1	1	0101	PS	SDIO
JTAG Mode (*)	1	0	0000	PS	JTAG

SD Mode LS mode may be supported in the future.

SD Mode LS requires VCC_CFG_MIO of 1.8V.

(*) Short-circuit R235 to enable JTAG mode

FPGA Configuration

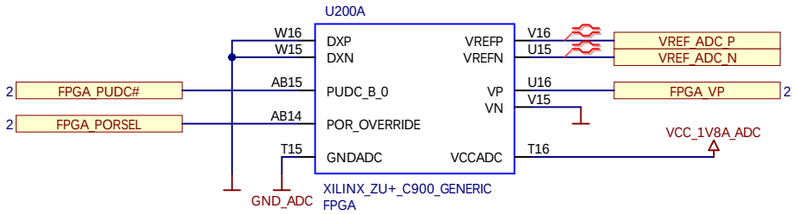

FPGA PS Configuration

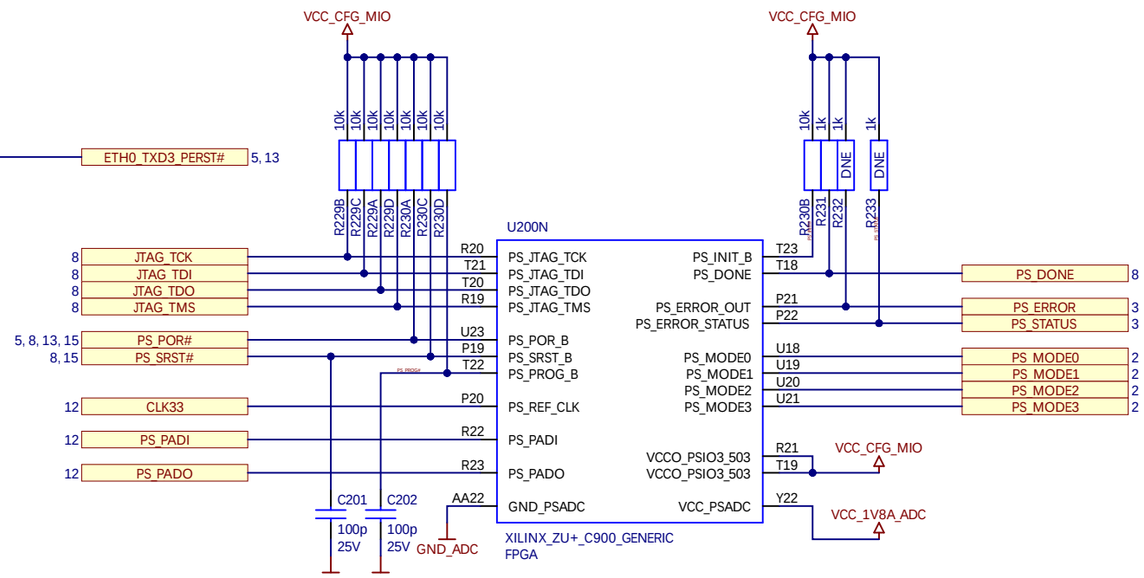

Miscellaneous

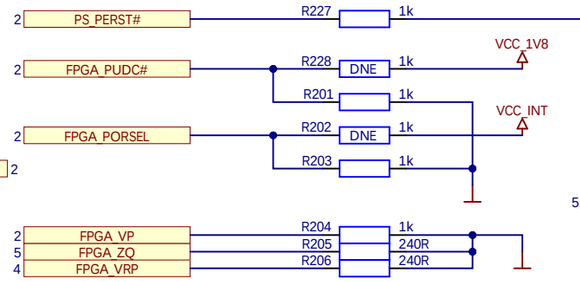

PCIe Reset

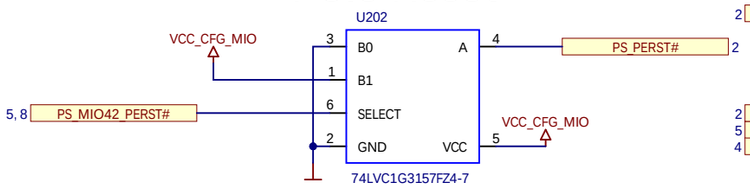

ENCLUSTRA FPGA SOLUTIONS	Project ME-XU1.PrjPcb	Sheet Name ME-XU1_P02_FPGA_CONFIG.SchDoc	Customer No 0000	Revision R5.0	DNE = Do Not Equip	Confidential
	Company Enclustra FPGA Solutions	Copyright © 2023 by Enclustra FPGA Solutions	Project No 507	Designed MHEI	Date 26 Sep 2023	Sheet/sheets 2 / 23

FPGA MGT Bank 228

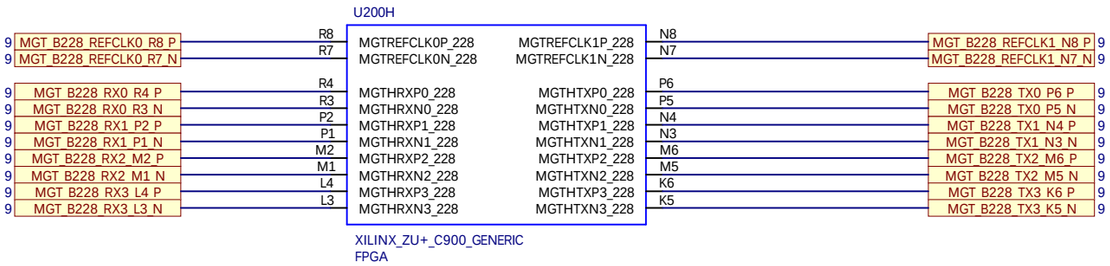

FPGA PS GTR Bank 505

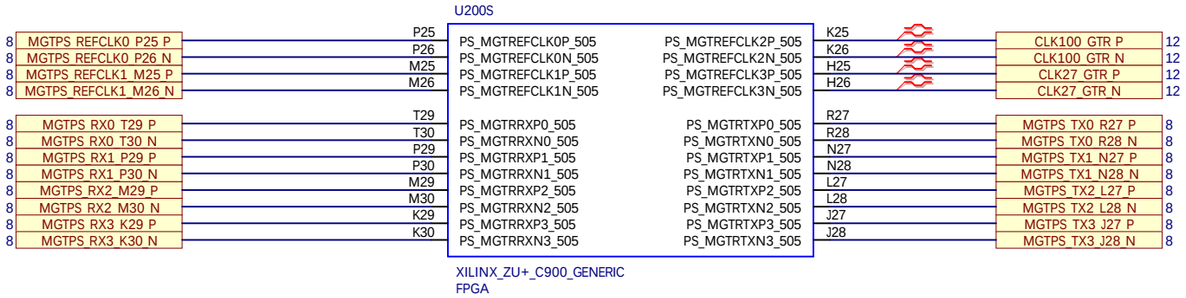

FPGA MGT Bank 229

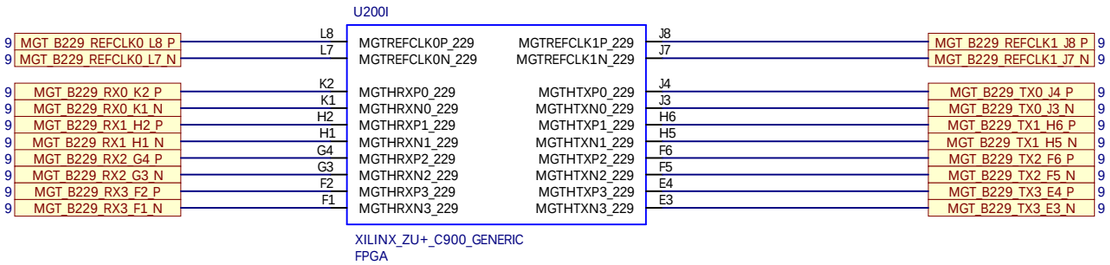

FPGA Reference Voltages

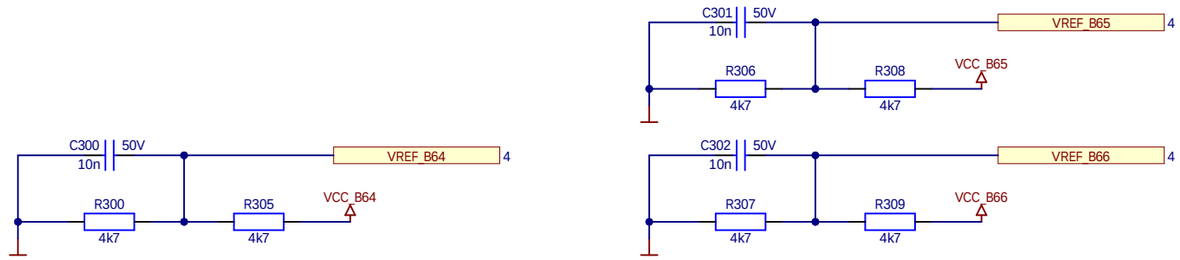

FPGA MGT Bank 230

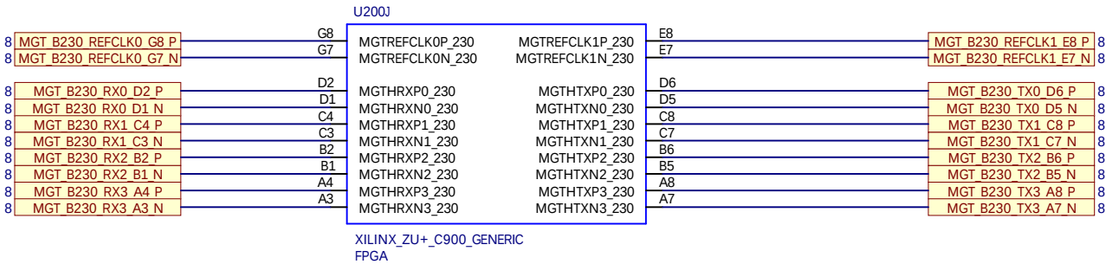

User LEDs

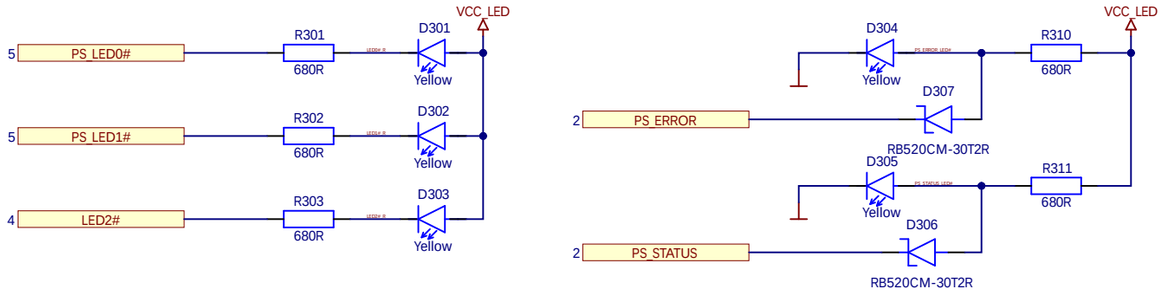

FPGA MGT Bank 128

optional via MGT_SEL

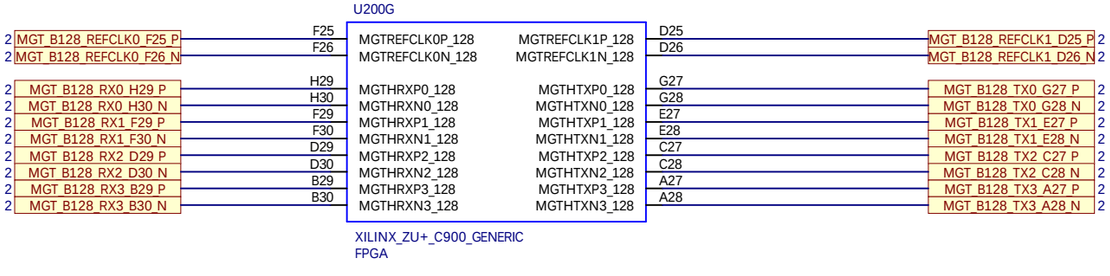

LED Power

not included in user schematics

ENCLUSTRA FPGA SOLUTIONS	Project ME-XU1.PrjPcb	Sheet Name ME-XU1_P03_FPGA_MGT_BANKS_LEDS.SchDoc	Customer No 0000	Revision R5.0	DNE = Do Not Equip	Confidential
	Company Enclustra FPGA Solutions	Copyright © 2023 by Enclustra FPGA Solutions	Project No 507	Designed MHEI	Date 26 Sep 2023	Sheet/sheets 3 / 23

FPGA HP Bank 64

VCCO = VCC_IO_B64 (max 1.8V)

U200D

9	IO_B64_L1_AF11_P	AF11	IO_L1P_T0L_N0_DBC_64	IO_L13P_T2L_N0_GC_QBC_64	AG6	IO_B64_L13_GC_AG6_P	9
9	IO_B64_L1_AG11_N	AG11	IO_L1N_T0L_N1_DBC_64	IO_L13N_T2L_N1_GC_QBC_64	AG5	IO_B64_L13_GC_AG5_N	9
9	IO_B64_L2_AG13_P	AG13	IO_L2P_T0L_N2_64	IO_L14P_T2L_N2_GC_64	AH6	IO_B64_L14_GC_AH6_P	9
9	IO_B64_L2_AH13_N	AH13	IO_L2N_T0L_N3_64	IO_L14N_T2L_N3_GC_64	AJ6	IO_B64_L14_GC_AJ6_N	9
9	IO_B64_L3_AD15_AH12_P	AH12	IO_L3P_T0L_N4_AD15P_64	IO_L15P_T2L_N4_AD11P_64	AK7	IO_B64_L15_AD11_AK7_P	9
9	IO_B64_L3_AD15_AJ12_N	AJ12	IO_L3N_T0L_N5_AD15N_64	IO_L15N_T2L_N5_AD11N_64	AK6	IO_B64_L15_AD11_AK6_N	9
9	IO_B64_L4_AD7_AK13_P	AK13	IO_L4P_T0U_N6_DBC_AD7P_64	IO_L16P_T2U_N6_QBC_AD3P_64	AF6	IO_B64_L16_AD3_AF6_P	9
9	IO_B64_L4_AD7_AK12_N	AK12	IO_L4N_T0U_N7_DBC_AD7N_64	IO_L16N_T2U_N7_QBC_AD3N_64	AF5	IO_B64_L16_AD3_AF5_N	9
9	IO_B64_L5_AD14_AJ11_P	AJ11	IO_L5P_T0U_N8_AD14P_64	IO_L17P_T2U_N8_AD10P_64	AJ5	IO_B64_L17_AD10_AJ5_P	9
9	IO_B64_L5_AD14_AK11_N	AK11	IO_L5N_T0U_N9_AD14N_64	IO_L17N_T2U_N9_AD10N_64	AK5	IO_B64_L17_AD10_AK5_N	9
9	IO_B64_L6_AD6_AJ10_P	AJ10	IO_L6P_T0U_N10_AD6P_64	IO_L18P_T2U_N10_AD2P_64	AH4	IO_B64_L18_AD2_AH4_P	9
9	IO_B64_L6_AD6_AK10_N	AK10	IO_L6N_T0U_N11_AD6N_64	IO_L18N_T2U_N11_AD2N_64	AJ4	IO_B64_L18_AD2_AJ4_N	9
15	IO_B64_AH11	AH11	IO_T0U_N12_VRP_64	IO_T2U_N12_64	AG4	IO_B64_AG4	15
9	IO_B64_L7_AD13_AF8_P	AF8	IO_L7P_T1L_N0_QBC_AD13P_64	IO_L19P_T3L_N0_DBC_AD9P_64	AK4	IO_B64_L19_AD9_AK4_P	9
9	IO_B64_L7_AD13_AF7_N	AF7	IO_L7N_T1L_N1_QBC_AD13N_64	IO_L19N_T3L_N1_DBC_AD9N_64	AK3	IO_B64_L19_AD9_AK3_N	9
9	IO_B64_L8_AD5_AF10_P	AF10	IO_L8P_T1L_N2_AD5P_64	IO_L20P_T3L_N2_AD1P_64	AH3	IO_B64_L20_AD1_AH3_P	9
9	IO_B64_L8_AD5_AG10_N	AG10	IO_L8N_T1L_N3_AD5N_64	IO_L20N_T3L_N3_AD1N_64	AH2	IO_B64_L20_AD1_AH2_N	9
9	IO_B64_L9_AD12_AH9_P	AH9	IO_L9P_T1L_N4_AD12P_64	IO_L21P_T3L_N4_AD8P_64	AJ2	IO_B64_L21_AD8_AJ2_P	9
9	IO_B64_L9_AD12_AJ9_N	AJ9	IO_L9N_T1L_N5_AD12N_64	IO_L21N_T3L_N5_AD8N_64	AK2	IO_B64_L21_AD8_AK2_N	9
9	IO_B64_L10_AD4_AK9_P	AK9	IO_L10P_T1U_N6_QBC_AD4P_64	IO_L22P_T3U_N6_DBC_AD0P_64	AG1	IO_B64_L22_AD0_AG1_P	9
9	IO_B64_L10_AD4_AK8_N	AK8	IO_L10N_T1U_N7_QBC_AD4N_64	IO_L22N_T3U_N7_DBC_AD0N_64	AH1	IO_B64_L22_AD0_AH1_N	9
9	IO_B64_L11_GC_AH7_P	AH7	IO_L11P_T1U_N8_GC_64	IO_L23P_T3U_N8_64	AF3	IO_B64_L23_AF3_P	9
9	IO_B64_L11_GC_AJ7_N	AJ7	IO_L11N_T1U_N9_GC_64	IO_L23N_T3U_N9_64	AG3	IO_B64_L23_AG3_N	9
9	IO_B64_L12_GC_AG8_P	AG8	IO_L12P_T1U_N10_GC_64	IO_L24P_T3U_N10_64	AF2	IO_B64_L24_AF2_P	9
9	IO_B64_L12_GC_AH8_N	AH8	IO_L12N_T1U_N11_GC_64	IO_L24N_T3U_N11_64	AF1	IO_B64_L24_AF1_N	9
15	IO_B64_AG9	AG9	IO_T1U_N12_64	IO_T3U_N12_64	AJ1	IO_B64_AJ1	15
				VCCO_64	AF9		
				VCCO_64	AG12	VCC_B64	
				VCCO_64	AH10		
3	VREF_B64	AF12	VREF_64				

XILINX_ZU+_C900_GENERIC
FPGA

FPGA HP Bank 66

VCCO = VCC_IO_B66 (max 1.8V)

U200F

9	IO_B66_L1_Y4_P	Y4	IO_L1P_T0L_N0_DBC_66	IO_L13P_T2L_N0_GC_QBC_66	U8	IO_B66_L13_GC_U8_P	8
9	IO_B66_L1_Y3_N	Y3	IO_L1N_T0L_N1_DBC_66	IO_L13N_T2L_N1_GC_QBC_66	V8	IO_B66_L13_GC_V8_N	8
9	IO_B66_L2_Y2_P	Y2	IO_L2P_T0L_N2_66	IO_L14P_T2L_N2_GC_66	Y9	IO_B66_L14_GC_Y9_P	8
9	IO_B66_L2_Y1_N	Y1	IO_L2N_T0L_N3_66	IO_L14N_T2L_N3_GC_66	Y8	IO_B66_L14_GC_Y8_N	8
2	IO_B66_L3_AD15_W2_P	W2	IO_L3P_T0L_N4_AD15P_66	IO_L15P_T2L_N4_AD11P_66	U11	IO_B66_L15_AD11_U11_P	8
2	IO_B66_L3_AD15_W1_N	W1	IO_L3N_T0L_N5_AD15N_66	IO_L15N_T2L_N5_AD11N_66	V11	IO_B66_L15_AD11_V11_N	8
2	IO_B66_L4_AD7_V2_P	V2	IO_L4P_T0U_N6_DBC_AD7P_66	IO_L16P_T2U_N6_QBC_AD3P_66	W11	IO_B66_L16_AD3_W11_P	8
2	IO_B66_L4_AD7_V1_N	V1	IO_L4N_T0U_N7_DBC_AD7N_66	IO_L16N_T2U_N7_QBC_AD3N_66	W10	IO_B66_L16_AD3_W10_N	8
2	IO_B66_L5_AD14_U2_P	U2	IO_L5P_T0U_N8_AD14P_66	IO_L17P_T2U_N8_AD10P_66	U9	IO_B66_L17_AD10_U9_P	8
2	IO_B66_L5_AD14_U3_N	U3	IO_L5N_T0U_N9_AD14N_66	IO_L17N_T2U_N9_AD10N_66	V9	IO_B66_L17_AD10_V9_N	8
8	IO_B66_L6_AD6_T1_P	T1	IO_L6P_T0U_N10_AD6P_66	IO_L18P_T2U_N10_AD2P_66	T11	IO_B66_L18_AD2_T11_P	8
8	IO_B66_L6_AD6_U1_N	U1	IO_L6N_T0U_N11_AD6N_66	IO_L18N_T2U_N11_AD2N_66	U10	IO_B66_L18_AD2_U10_N	8
5, 15	I2C_SCL_LV	R425 100R	IO_T0U_N12_VRP_66	IO_T2U_N12_66	Y10	IO_B66_Y10	2
8	IO_B66_L7_AD13_W5_P	W5	IO_L7P_T1L_N0_QBC_AD13P_66	IO_L19P_T3L_N0_DBC_AD9P_66	R10	IO_B66_L19_AD9_R10_P	8
8	IO_B66_L7_AD13_Y5_N	Y5	IO_L7N_T1L_N1_QBC_AD13N_66	IO_L19N_T3L_N1_DBC_AD9N_66	T10	IO_B66_L19_AD9_T10_N	8
8	IO_B66_L8_AD5_V4_P	V4	IO_L8P_T1L_N2_AD5P_66	IO_L20P_T3L_N2_AD1P_66	P11	IO_B66_L20_AD1_P11_P	8
8	IO_B66_L8_AD5_W4_N	W4	IO_L8N_T1L_N3_AD5N_66	IO_L20N_T3L_N3_AD1N_66	P10	IO_B66_L20_AD1_P10_N	8
8	IO_B66_L9_AD12_U5_P	U5	IO_L9P_T1L_N4_AD12P_66	IO_L21P_T3L_N4_AD8P_66	N12	IO_B66_L21_AD8_N12_P	8
8	IO_B66_L9_AD12_U4_N	U4	IO_L9N_T1L_N5_AD12N_66	IO_L21N_T3L_N5_AD8N_66	M12	IO_B66_L21_AD8_M12_N	8
8	IO_B66_L10_AD4_U7_P	U7	IO_L10P_T1U_N6_QBC_AD4P_66	IO_L22P_T3U_N6_DBC_AD0P_66	N10	IO_B66_L22_AD0_N10_P	8
8	IO_B66_L10_AD4_U6_N	U6	IO_L10N_T1U_N7_QBC_AD4N_66	IO_L22N_T3U_N7_DBC_AD0N_66	M10	IO_B66_L22_AD0_M10_N	8
2	IO_B66_L11_GC_V7_P	V7	IO_L11P_T1U_N8_GC_66	IO_L23P_T3U_N8_66	L12	IO_B66_L23_L12_P	8
2	IO_B66_L11_GC_V6_N	V6	IO_L11N_T1U_N9_GC_66	IO_L23N_T3U_N9_66	L11	IO_B66_L23_L11_N	8
8	IO_B66_L12_GC_W7_P	W7	IO_L12P_T1U_N10_GC_66	IO_L24P_T3U_N10_66	L10	IO_B66_L24_L10_P	8
8	IO_B66_L12_GC_W6_N	W6	IO_L12N_T1U_N11_GC_66	IO_L24N_T3U_N11_66	K10	IO_B66_L24_K10_N	8
5, 15	I2C_SDA_LV	R424 100R	IO_T1U_N12_66	IO_T3U_N12_66	N11	IO_B66_N11	2
				VCCO_66	V5		
				VCCO_66	W8	VCC_B66	
				VCCO_66	Y6		
3	VREF_B66	W9	VREF_66				

XILINX_ZU+_C900_GENERIC
FPGA

FPGA HP Bank 65

VCCO = VCC_IO_B65 (max 1.8V)

U200E

9	IO_B65_L1_AB13_P	AB13	IO_L1P_T0L_N0_DBC_65	IO_L13P_T2L_N0_GC_QBC_65	AB6	IO_B65_L13_GC_AB6_P	8
9	IO_B65_L1_AC13_N	AC13	IO_L1N_T0L_N1_DBC_65	IO_L13N_T2L_N1_GC_QBC_65	AB5	IO_B65_L13_GC_AB5_N	8
9	IO_B65_L2_AE13_P	AE13	IO_L2P_T0L_N2_65	IO_L14P_T2L_N2_GC_65	AC6	IO_B65_L14_GC_AC6_P	8
9	IO_B65_L2_AF13_N	AF13	IO_L2N_T0L_N3_65	IO_L14N_T2L_N3_GC_65	AD6	IO_B65_L14_GC_AD6_N	8
2	IO_B65_L3_AD15_AD12_P	AD12	IO_L3P_T0L_N4_AD15P_65	IO_L15P_T2L_N4_AD11P_65	AA6	IO_B65_L15_AD11_AA6_P	8
2	IO_B65_L3_AD15_AE12_N	AE12	IO_L3N_T0L_N5_AD15N_65	IO_L15N_T2L_N5_AD11N_65	AA5	IO_B65_L15_AD11_AA5_N	8
2	IO_B65_L4_AD7_AC11_P	AC11	IO_L4P_T0U_N6_DBC_AD7P_SMBALERT_65	IO_L16P_T2U_N6_QBC_AD3P_65	AD5	IO_B65_L16_AD3_AD5_P	8
2	IO_B65_L4_AD7_AD11_N	AD11	IO_L4N_T0U_N7_DBC_AD7N_65	IO_L16N_T2U_N7_QBC_AD3N_65	AE5	IO_B65_L16_AD3_AE5_N	8
2	IO_B65_L5_AD14_AA12_P	AA12	IO_L5P_T0U_N8_AD14P_65	IO_L17P_T2U_N8_AD10P_65	AD4	IO_B65_L17_AD10_AD4_P	8
2	IO_B65_L5_AD14_AA11_N	AA11	IO_L5N_T0U_N9_AD14N_65	IO_L17N_T2U_N9_AD10N_65	AE4	IO_B65_L17_AD10_AE4_N	8
8	IO_B65_L6_AD6_AB11_P	AB11	IO_L6P_T0U_N10_AD6P_65	IO_L18P_T2U_N10_AD2P_65	AB4	IO_B65_L18_AD2_AB4_P	8
8	IO_B65_L6_AD6_AB10_N	AB10	IO_L6N_T0U_N11_AD6N_65	IO_L18N_T2U_N11_AD2N_65	AC4	IO_B65_L18_AD2_AC4_N	8
2	FPGA_VRP	AC12	IO_T0U_N12_VRP_65	IO_T2U_N12_65	AE7	IO_B65_AE7	2
8	IO_B65_L7_AD13_AB9_P	AB9	IO_L7P_T1L_N0_QBC_AD13P_65	IO_L19P_T3L_N0_DBC_AD9P_65	AB3	IO_B65_L19_AD9_AB3_P	8
8	IO_B65_L7_AD13_AC9_N	AC9	IO_L7N_T1L_N1_QBC_AD13N_65	IO_L19N_T3L_N1_DBC_AD9N_65	AC3	IO_B65_L19_AD9_AC3_N	8
8	IO_B65_L8_AD5_AD10_P	AD10	IO_L8P_T1L_N2_AD5P_65	IO_L20P_T3L_N2_AD1P_65	AE3	IO_B65_L20_AD1_AE3_P	8
8	IO_B65_L8_AD5_AE10_N	AE10	IO_L8N_T1L_N3_AD5N_65	IO_L20N_T3L_N3_AD1N_65	AE2	IO_B65_L20_AD1_AE2_N	8
8	IO_B65_L9_AD12_AD9_P	AD9	IO_L9P_T1L_N4_AD12P_65	IO_L21P_T3L_N4_AD8P_65	AC2	IO_B65_L21_AD8_AC2_P	8
8	IO_B65_L9_AD12_AE9_N	AE9	IO_L9N_T1L_N5_AD12N_65	IO_L21N_T3L_N5_AD8N_65	AD2	IO_B65_L21_AD8_AD2_N	8
8	IO_B65_L10_AD4_AA8_P	AA8	IO_L10P_T1U_N6_QBC_AD4P_65	IO_L22P_T3U_N6_DBC_AD0P_65	AC1	IO_B65_L22_AD0_AC1_P	8
8	IO_B65_L10_AD4_AA7_N	AA7	IO_L10N_T1U_N7_QBC_AD4N_65	IO_L22N_T3U_N7_DBC_AD0N_65	AD1	IO_B65_L22_AD0_AD1_N	8
2	IO_B65_L11_GC_AC7_P	AC7	IO_L11P_T1U_N8_GC_65	IO_L23P_T3U_N8_I2C_SCLK_65	AA3	IO_B65_L23_SCLK_AA3_P	8
2	IO_B65_L11_GC_AD7_N	AD7	IO_L11N_T1U_N9_GC_65	IO_L23N_T3U_N9_65	AA2	IO_B65_L23_AA2_N	8
8	IO_B65_L12_GC_AB8_P	AB8	IO_L12P_T1U_N10_GC_65	IO_L24P_T3U_N10_PERSTN1_I2C_SDA_65	AA1	IO_B65_L24_SDA_AA1_P	8
8	IO_B65_L12_GC_AC8_N	AC8	IO_L12N_T1U_N11_GC_65	IO_L24N_T3U_N11_PERSTN0_65	AB1	IO_B65_L24_AB1_N	8
3	LED2#	AE8	IO_T1U_N12_65	IO_T3U_N12_65	AE1	IO_B65_AE1	2
				VCCO_65	AA9		
				VCCO_65	AC5	VCC_B65	
				VCCO_65	AD8		
3	VREF_B65	AA10	VREF_65				

XILINX_ZU+_C900_GENERIC
FPGA

FPGA HD Bank 48

VCCO = VCC_IO_B48 (max 3.3V)

U200C

8, 12	IO_B48_L1_AD15_C12_P	C12	IO_L1P_AD15P_48	IO_L7P_HDGC_48	F12	IO_B48_L7_HDGC_F12_P	8, 12
8, 12	IO_B48_L1_AD15_B11_N	B11	IO_L1N_AD15N_48	IO_L7N_HDGC_48	F11	IO_B48_L7_HDGC_F11_N	8, 12
8, 12	IO_B48_L2_AD14_A12_P	A12	IO_L2P_AD14P_48	IO_L8P_HDGC_48	G10	IO_B48_L8_HDGC_G10_P	8, 12
8, 12	IO_B48_L2_AD14_A11_N	A11	IO_L2N_AD14N_48	IO_L8N_HDGC_48	F10	IO_B48_L8_HDGC_F10_N	8, 12
8, 12	IO_B48_L3_AD13_B10_P	B10	IO_L3P_AD13P_48	IO_L9P_AD11P_48	K13	IO_B48_L9_AD11_K13_P	8, 12
8, 12	IO_B48_L3_AD13_A10_N	A10	IO_L3N_AD13N_48	IO_L9N_AD11N_48	K12	IO_B48_L9_AD11_K12_N	8, 12
8, 12	IO_B48_L4_AD12_D11_P	D11	IO_L4P_AD12P_48	IO_L10P_AD10P_48	H12	IO_B48_L10_AD10_H12_P	8, 12
8, 12	IO_B48_L4_AD12_C11_N	C11	IO_L4N_AD12N_48	IO_L10N_AD10N_48	G11	IO_B48_L10_AD10_G11_N	8, 12
8, 12	IO_B48_L5_HDGC_E12_P	E12	IO_L5P_HDGC_48	IO_L11P_AD9P_48	J12	IO_B48_L11_AD9_J12_P	8, 12
8, 12	IO_B48_L5_HDGC_D12_N	D12	IO_L5N_HDGC_48	IO_L11N_AD9N_48	H11	IO_B48_L11_AD9_H11_N	8, 12
8, 12	IO_B48_L6_HDGC_E10_P	E10	IO_L6P_HDGC_48	IO_L12P_AD8P_48	J11	IO_B48_L12_AD8_J11_P	8, 12
8, 12	IO_B48_L6_HDGC_D10_N	D10	IO_L6N_HDGC_48	IO_L12N_AD8N_48	J10	IO_B48_L12_AD8_J10_N	8, 12
				VCCO_48	H10	VCC_IO_B48	
				VCCO_48	K11		

XILINX_ZU+_C900_GENERIC
FPGA

FPGA HD Bank 47

VCCO = VCC_IO_B47 (max 3.3V)

U200B

8, 12	IO_B47_L1_AD11_B15_P	B15	IO_L1P_AD11P_47	IO_L7P_HDGC_AD5P_47	F15	IO_B47_L7_HDGC_AD5_F15_P	8, 12
8, 12	IO_B47_L1_AD11_A15_N	A15	IO_L1N_AD11N_47	IO_L7N_HDGC_AD5N_47	E15	IO_B47_L7_HDGC_AD5_E15_N	8, 12
8, 12	IO_B47_L2_AD10_B14_P	B14	IO_L2P_AD10P_47	IO_L8P_HDGC_AD4P_47	G13	IO_B47_L8_HDGC_AD4_G13_P	8, 12
8, 12	IO_B47_L2_AD10_A14_N	A14	IO_L2N_AD10N_47	IO_L8N_HDGC_AD4N_47	F13	IO_B47_L8_HDGC_AD4_F13_N	8, 12
8, 12	IO_B47_L3_AD9_B13_P	B13	IO_L3P_AD9P_47	IO_L9P_AD3P_47	G15	IO_B47_L9_AD3_G15_P	8, 12
8, 12	IO_B47_L3_AD9_A13_N	A13	IO_L3N_AD9N_47	IO_L9N_AD3N_47	G14	IO_B47_L9_AD3_G14_N	8, 12
8, 12	IO_B47_L4_AD8_C14_P	C14	IO_L4P_AD8P_47	IO_L10P_AD2P_47	K15	IO_B47_L10_AD2_K15_P	8, 12
8, 12	IO_B47_L4_AD8_C13_N	C13	IO_L4N_AD8N_47	IO_L10N_AD2N_47	J15	IO_B47_L10_AD2_J15_N	8, 12
8, 12	IO_B47_L5_HDGC_AD7_D15_P	D15	IO_L5P_HDGC_AD7P_47	IO_L11P_AD1P_47	K14	IO_B47_L11_AD1_K14_P	8, 12
8, 12	IO_B47_L5_HDGC_AD7_D14_N	D14	IO_L5N_HDGC_AD7N_47	IO_L11N_AD1N_47	J14	IO_B47_L11_AD1_J14_N	8, 12
8, 12	IO_B47_L6_HDGC_AD6_E14_P	E14	IO_L6P_HDGC_AD6P_47	IO_L12P_AD0P_47	H14	IO_B47_L12_AD0_H14_P	8, 12
8, 12	IO_B47_L6_HDGC_AD6_E13_N	E13	IO_L6N_HDGC_AD6N_47	IO_L12N_AD0N_47	H13	IO_B47_L12_AD0_H13_N	8, 12
				VCCO_47	H15	VCC_IO_B47	
				VCCO_47	J13		

XILINX_ZU+_C900_GENERIC
FPGA

ENCLUSTRA FPGA SOLUTIONS	Project ME-XU1.PrjPcb	Sheet Name ME-XU1_P04_FPGA_IO_BANKS.SchDoc	Customer No 0000	Revision R5.0	DNE = Do Not Equip	Confidential
	Company Enclustra FPGA Solutions	Copyright © 2023 by Enclustra FPGA Solutions	Project No 507	Designed MHEI	Date 26 Sep 2023	Sheet/sheets 4 / 23

FPGA PS DDR Bank 504

VCCO = VCC_1V2

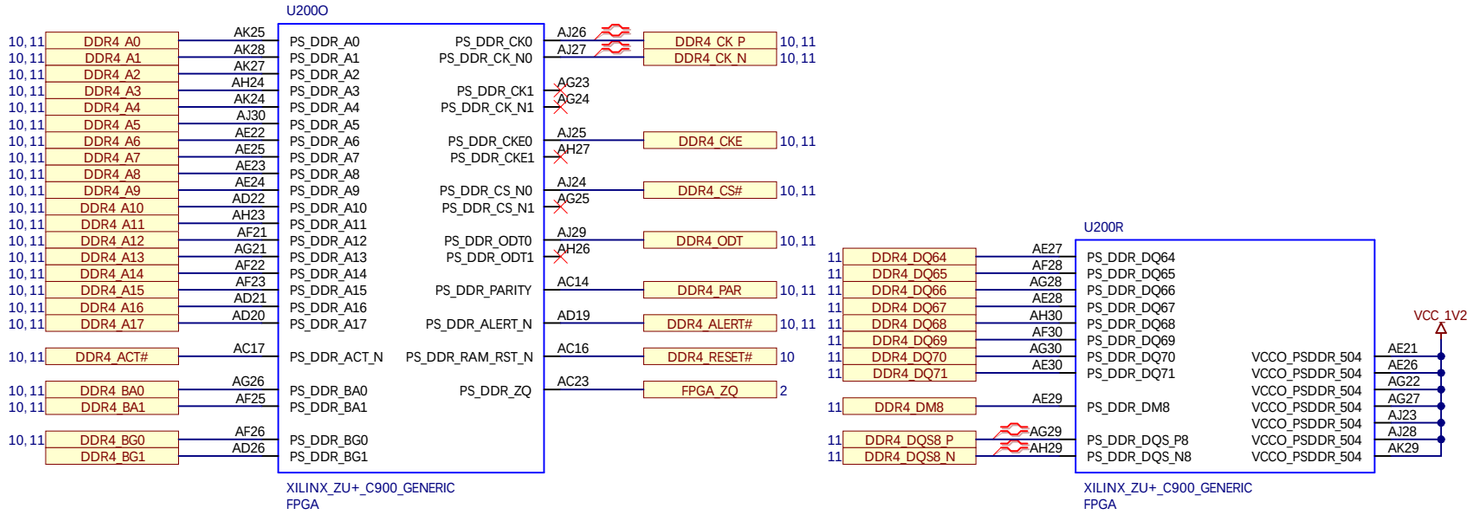

FPGA PS Bank 500

VCCO = VCC_1V8

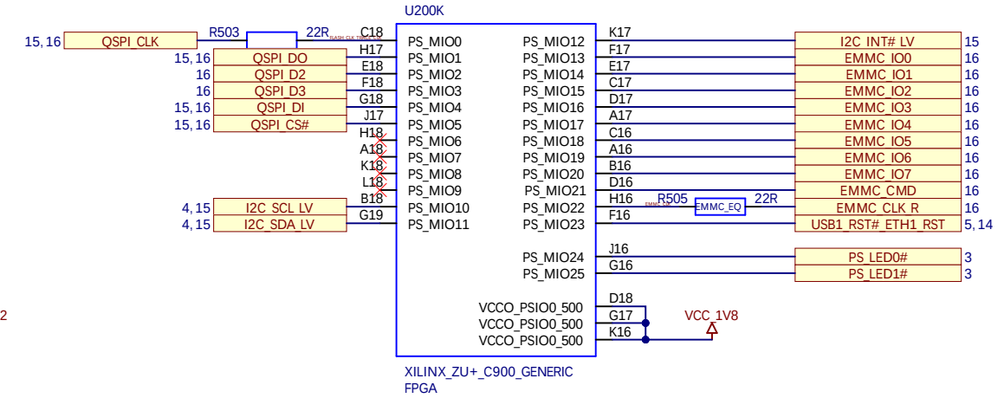

FPGA PS Bank 501

VCCO = VCC_CFG_MIO

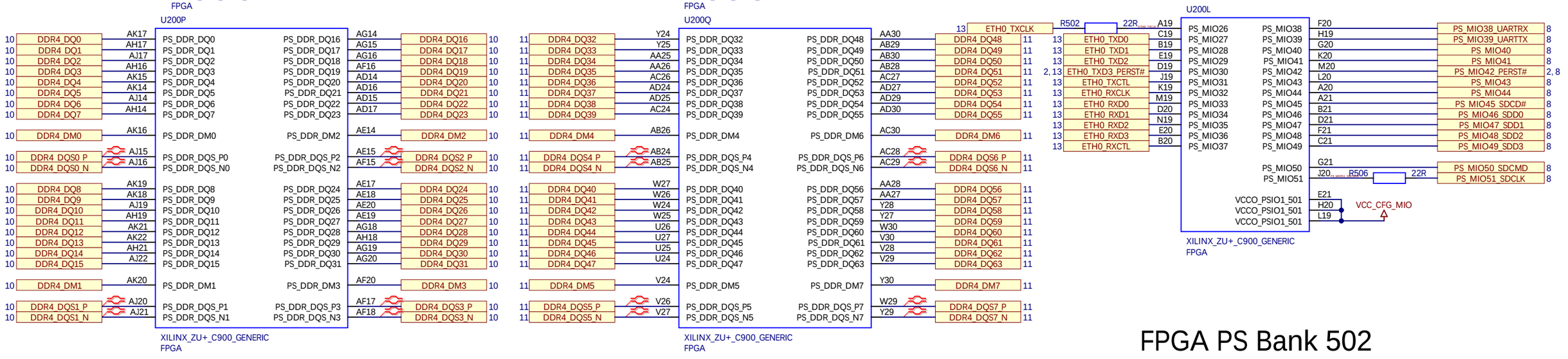

FPGA PS Bank 502

VCCO = VCC_1V8

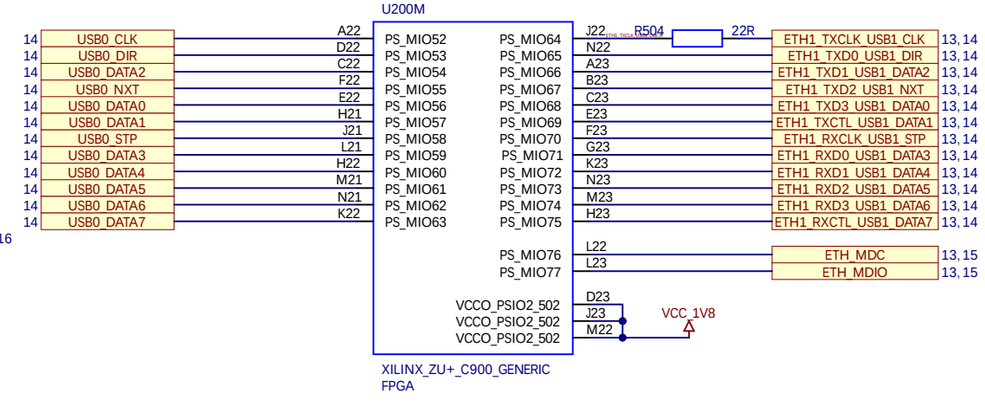

USB1/ETH1 Selection

default is ETH1 enabled, USB1 in reset

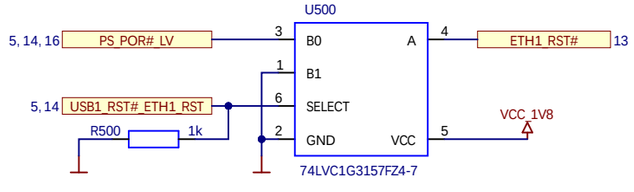

Reset Circuit

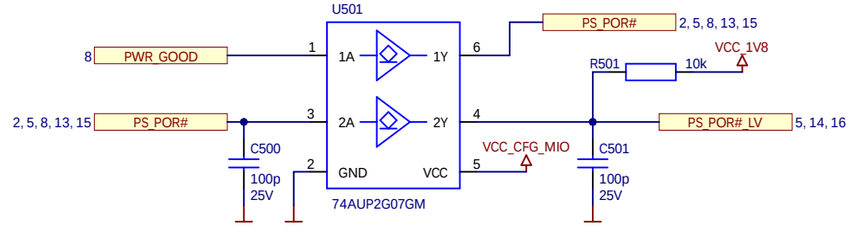

Project ME-XU1.PrjPcb	Sheet Name ME-XU1_P05_FPGA_PS_BANKS.SchDoc	Customer No 0000	Revision R5.0	DNE = Do Not Equip	Confidential
Company Enclustra FPGA Solutions	Copyright © 2023 by Enclustra FPGA Solutions	Project No 507	Designed MHEI	Date 26 Sep 2023	Sheet/sheets 5 / 23

FPGA Ground

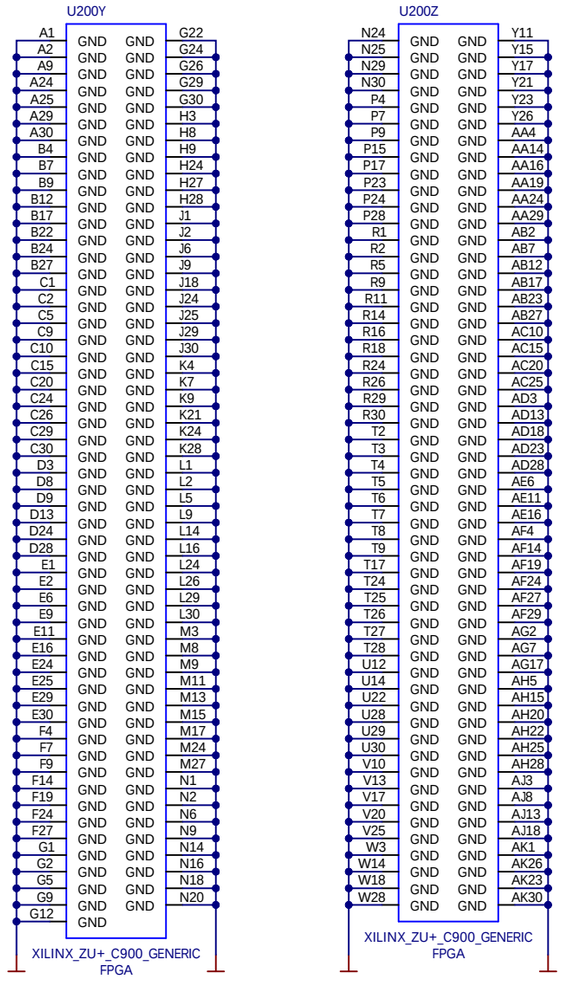

FPGA MGT Power

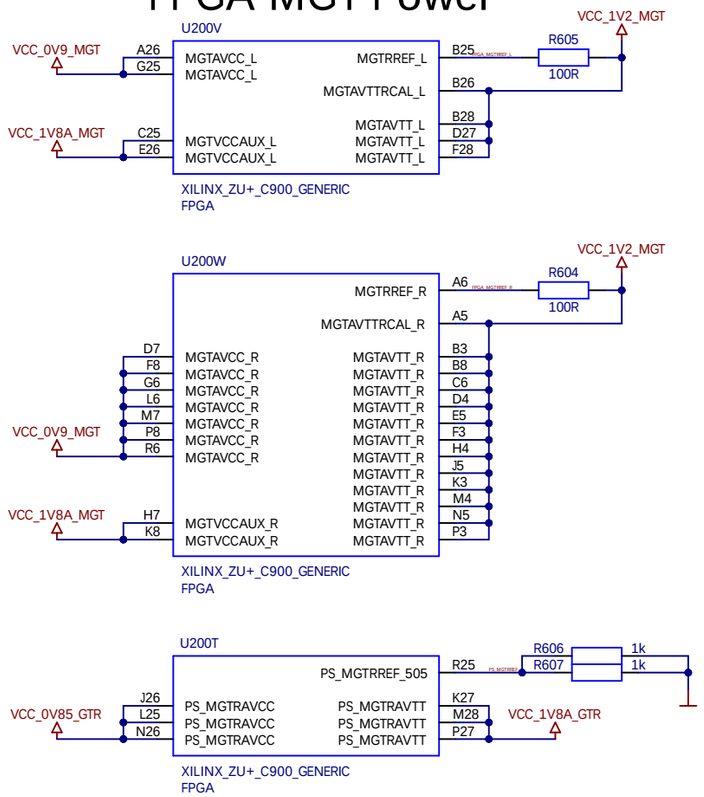

ADC Power

not included in user schematics

ADC Reference

not included in user schematics

MGT Power Filters

not included in user schematics

PLL and GTR Power Filters

not included in user schematics

FPGA Power

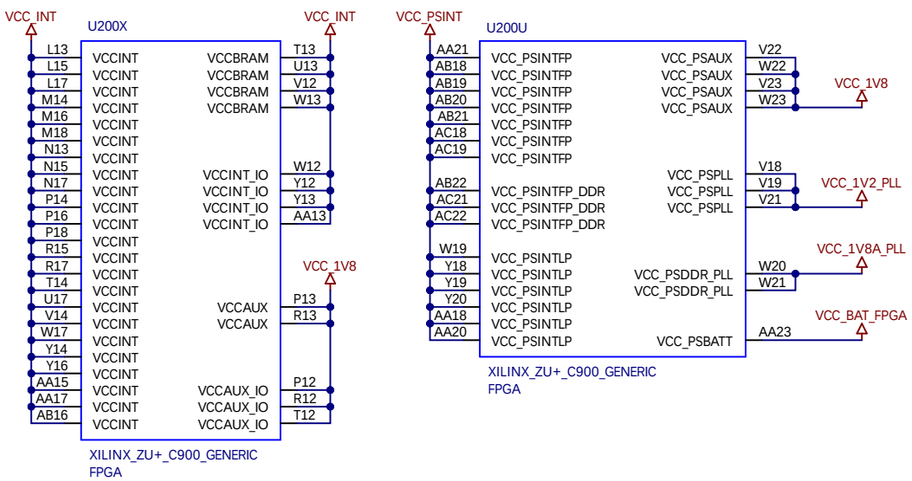

ENCLUSTRA FPGA SOLUTIONS	Project ME-XU1.PrjPcb	Sheet Name ME-XU1_P06_FPGA_POWER.SchDoc	Customer No 0000	Revision R5.0	DNE = Do Not Equip	Confidential
	Company Enclustra FPGA Solutions	Copyright © 2023 by Enclustra FPGA Solutions	Project No 507	Designed MHEI	Date 26 Sep 2023	Sheet/sheets 6 / 23

FPGA Decoupling

not included in user schematics

Power Decoupling

not included in user schematics

ENCLUSTRA FPGA SOLUTIONS	Project ME-XU1.PrjPcb	Sheet Name ME-XU1_P07_POWER_DECOUPLING.SchDoc	Customer No 0000	Revision R5.0	DNE = Do Not Equip	Confidential
	Company Enclustra FPGA Solutions	Copyright © 2023 by Enclustra FPGA Solutions	Project No 507	Designed MHEI	Date 26 Sep 2023	Sheet/sheets 7 / 23

Module Connector A

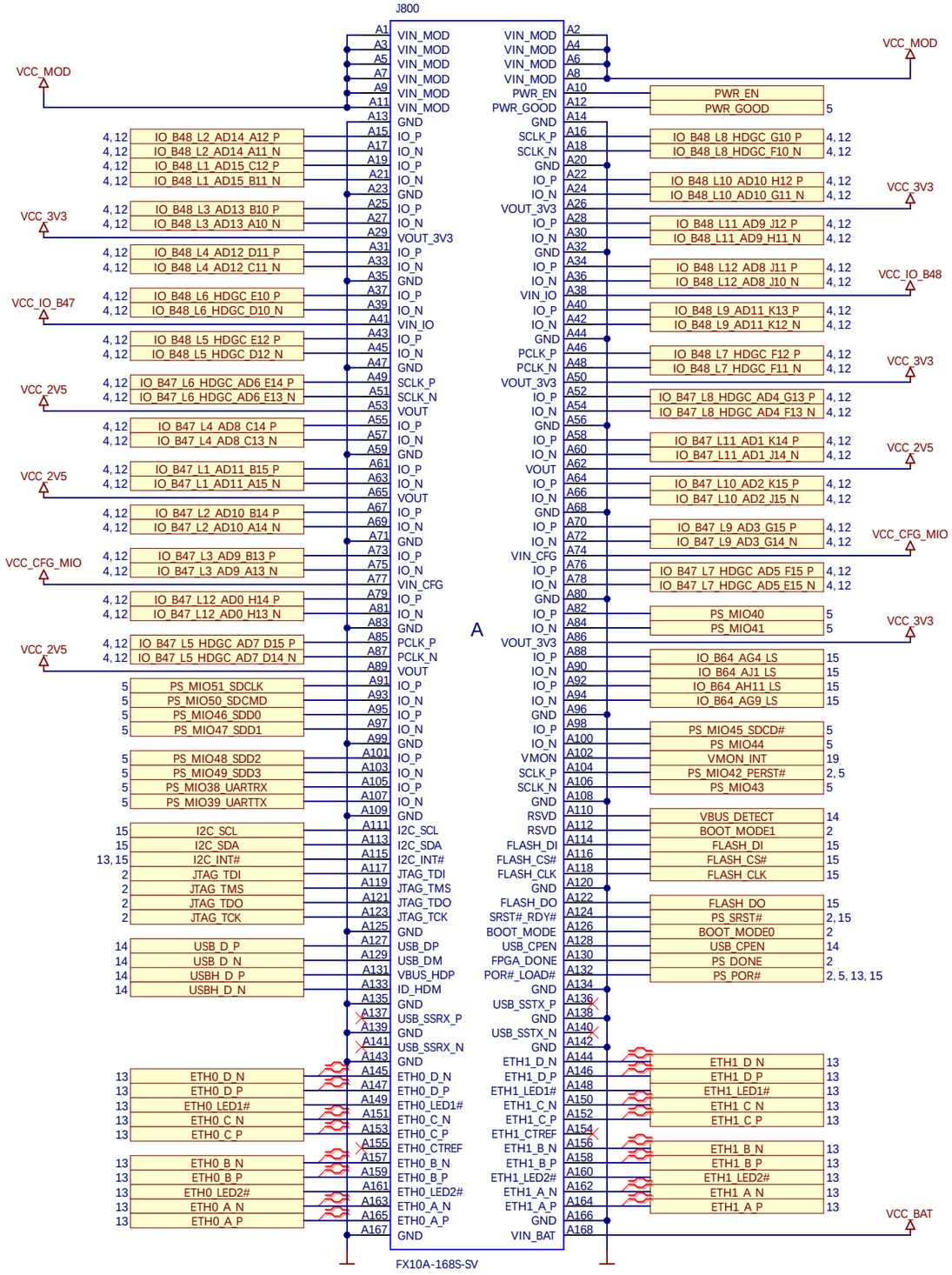

Module Connector B

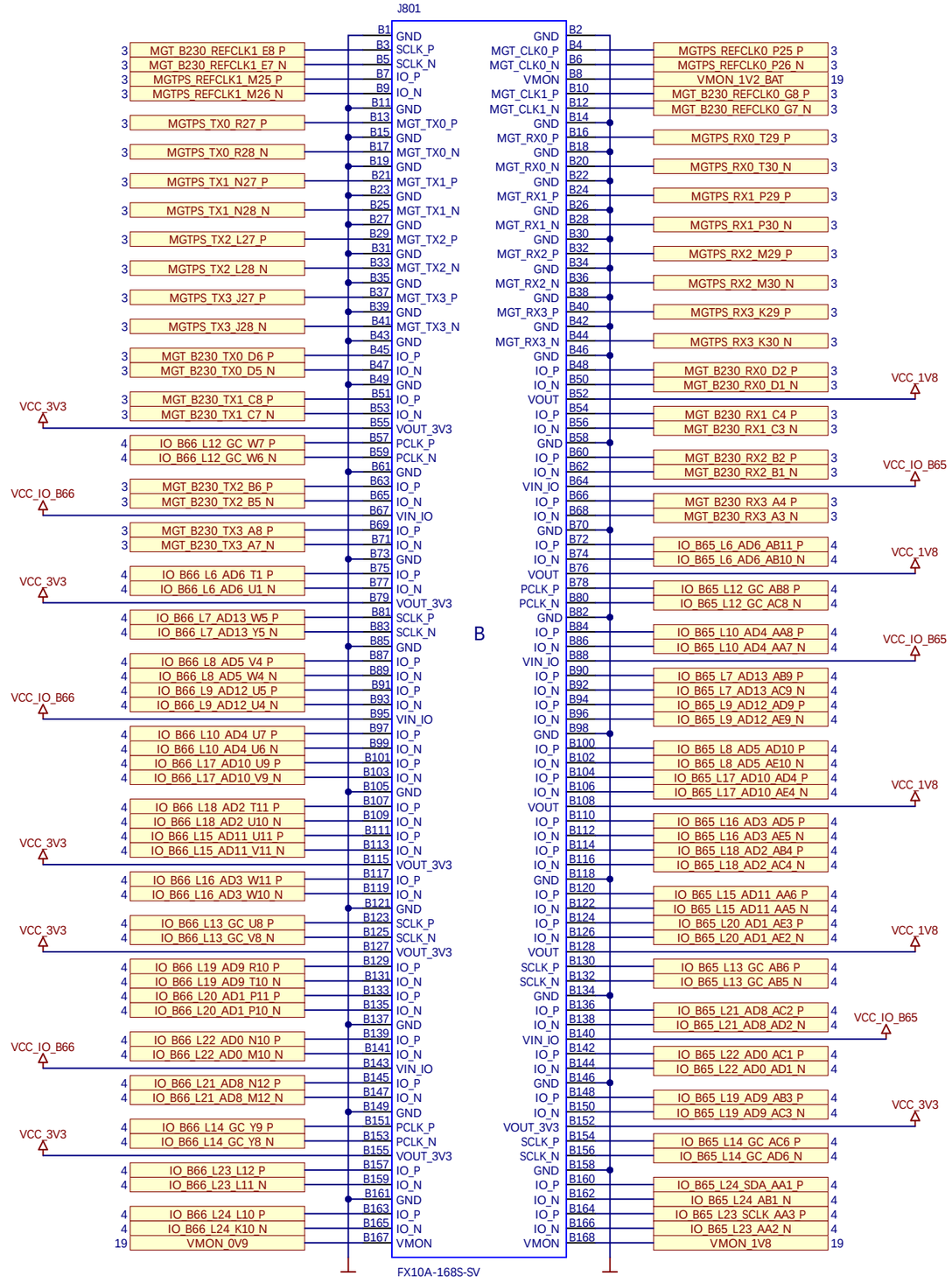

ENCLUSTRA FPGA SOLUTIONS	Project ME-XU1.PrjPcb	Sheet Name ME-XU1_P08_MODULE_CONNECTORS_A_B.SchDoc	Customer No 0000	Revision R5.0	DNE = Do Not Equip	Confidential
	Company Enclustra FPGA Solutions	Copyright © 2023 by Enclustra FPGA Solutions	Project No 507	Designed MHEI	Date 26 Sep 2023	Sheet/sheets 8 / 23

Module Connector C

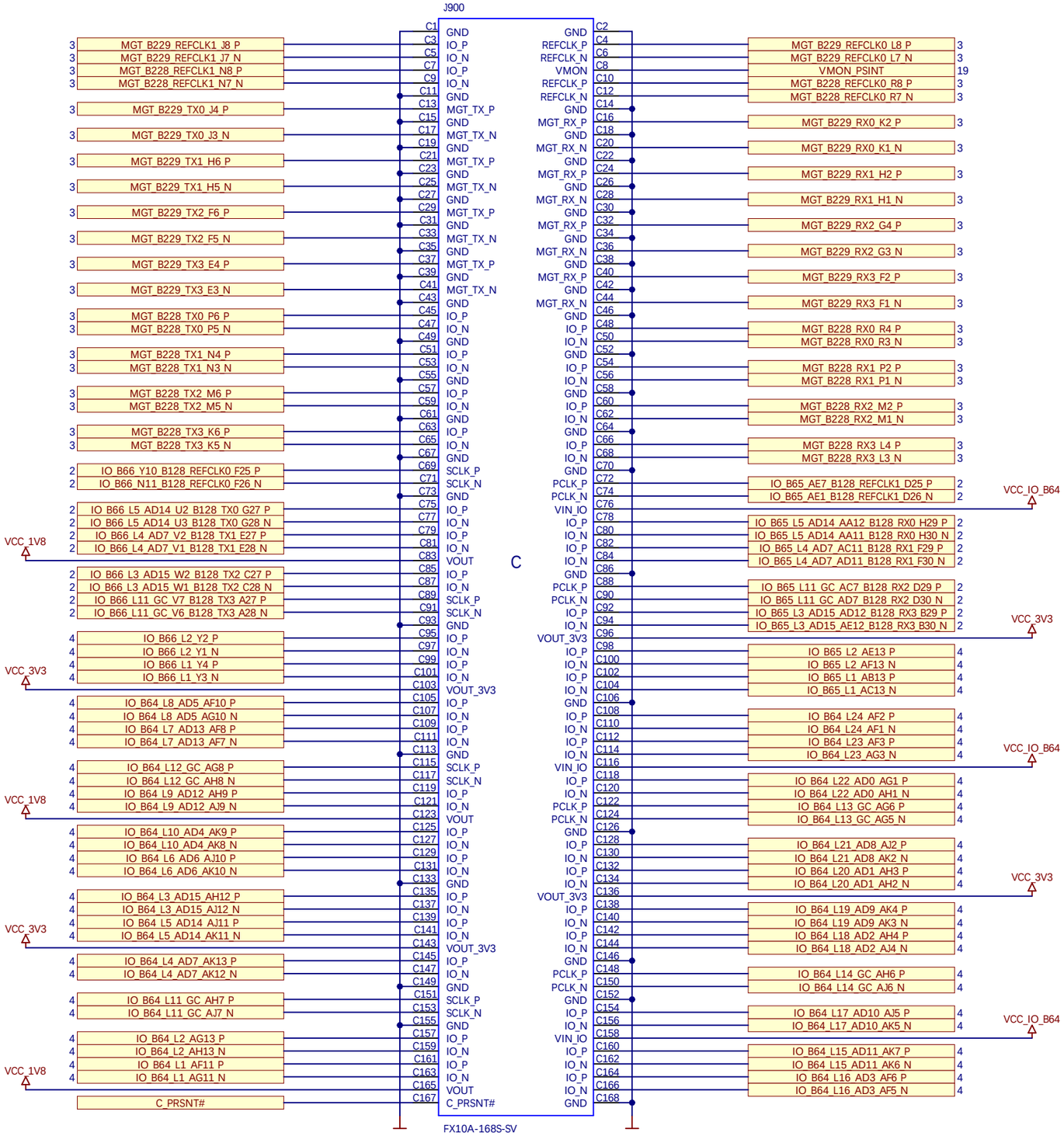

IO Voltage Generation

when C connector is not present on base board

not included in user schematics

Project ME-XU1.PrjPcb	Sheet Name ME-XU1_P09_MODULE_CONNECTOR_C.SchDoc	Customer No 0000	Revision R5.0	DNE = Do Not Equip	Confidential
Company Enclustra FPGA Solutions	Copyright © 2023 by Enclustra FPGA Solutions	Project No 507	Designed MHEI	Date 26 Sep 2023	Sheet/sheets 9 / 23

DDR4 SDRAM

Bytes 0-1

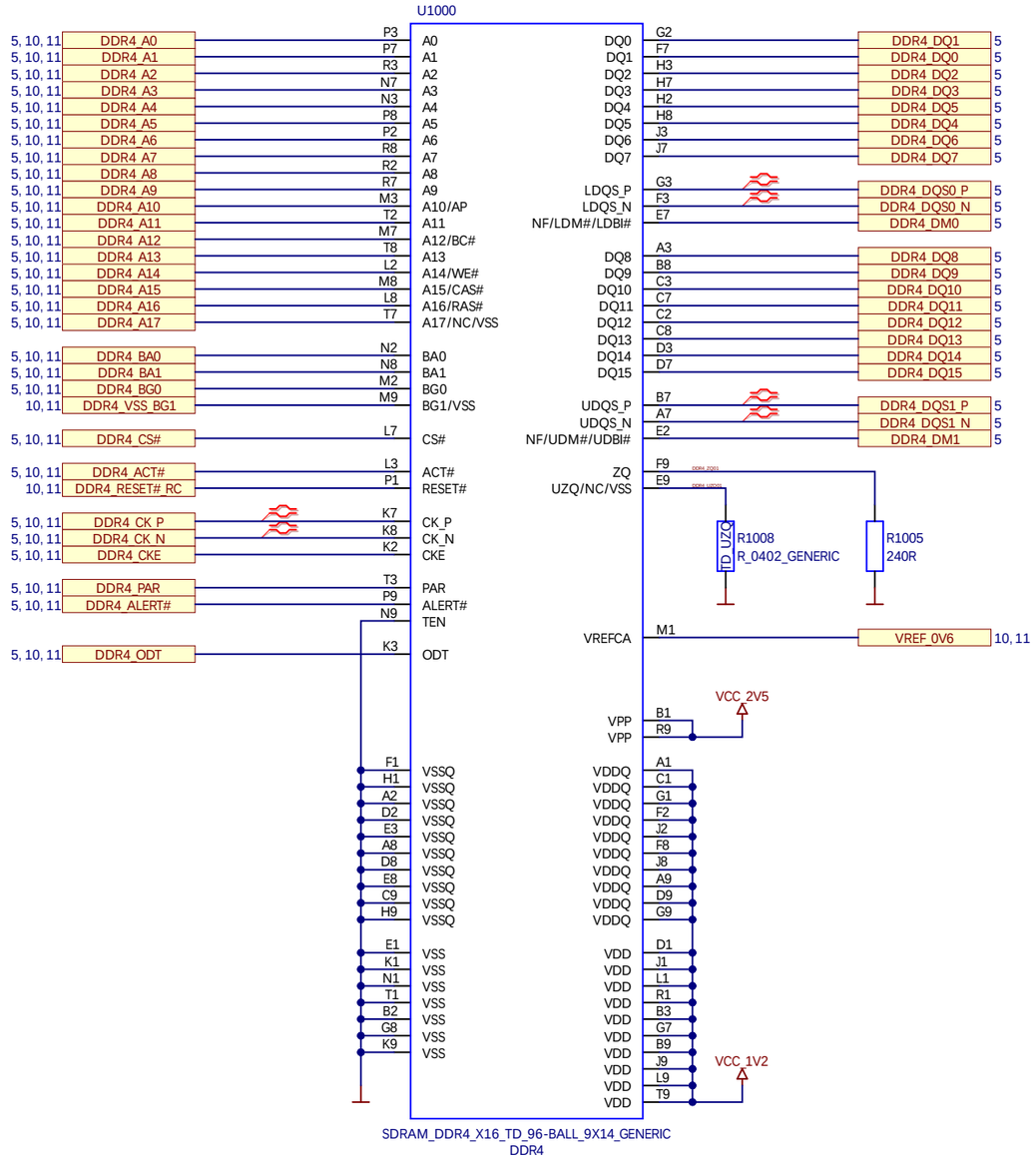

Bytes 2-3

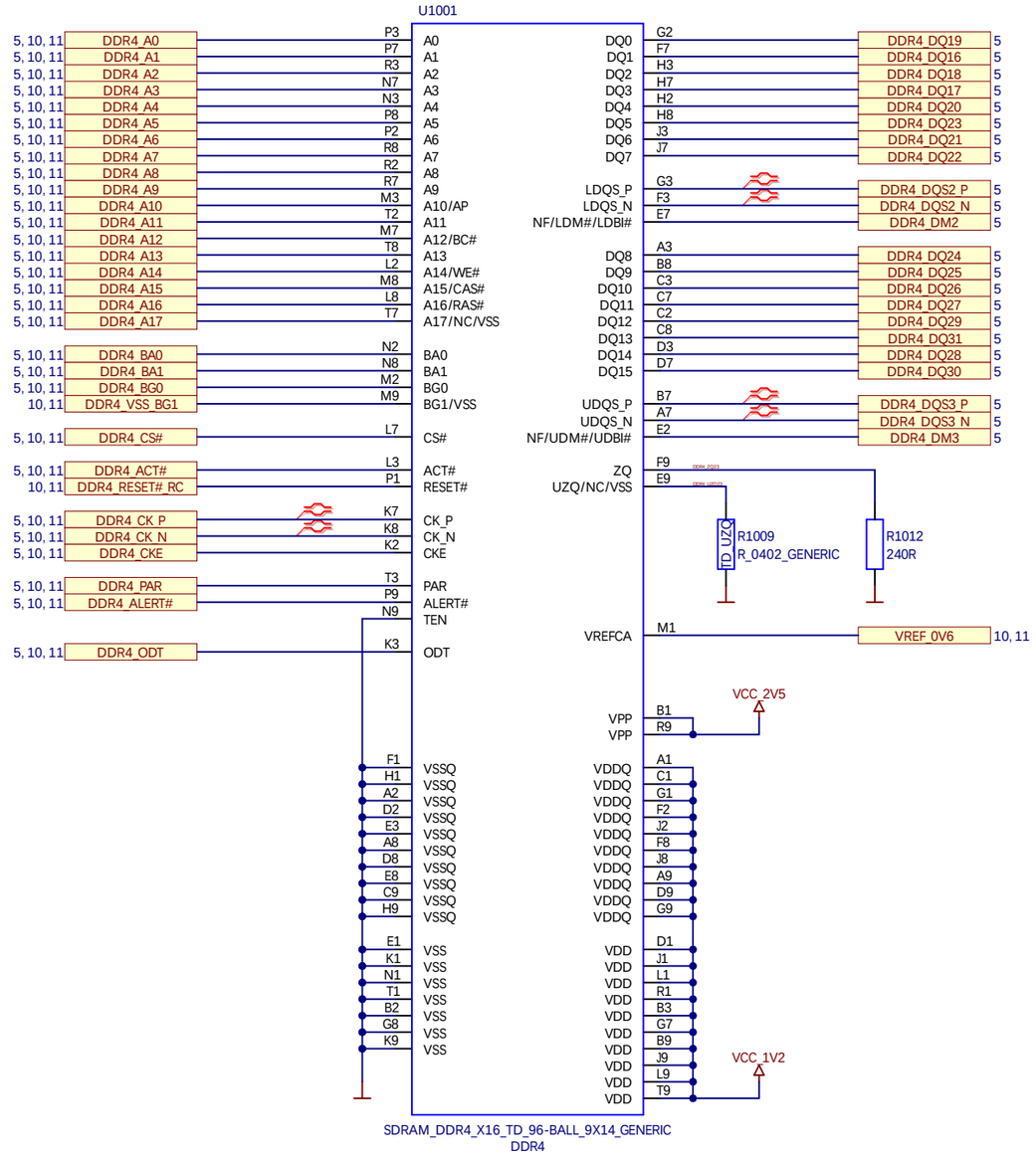

DDR4 Termination

not included in user schematics

DDR4 Miscellaneous

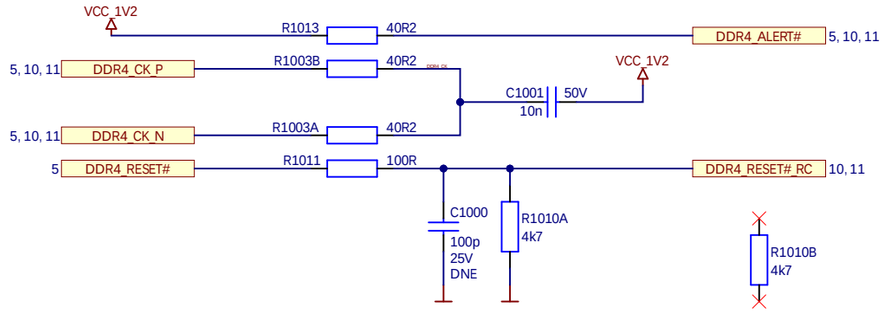

ENCLUSTRA FPGA SOLUTIONS	Project ME-XU1.PrjPcb	Sheet Name ME-XU1_P10_DDR4_SDRAM_0-3.SchDoc	Customer No 0000	Revision R5.0	DNE = Do Not Equip	Confidential
	Company Enclustra FPGA Solutions	Copyright © 2023 by Enclustra FPGA Solutions	Project No 507	Designed MHEI	Date 26 Sep 2023	Sheet/sheets 10 / 23

DDR4 SDRAM

Bytes 4-5

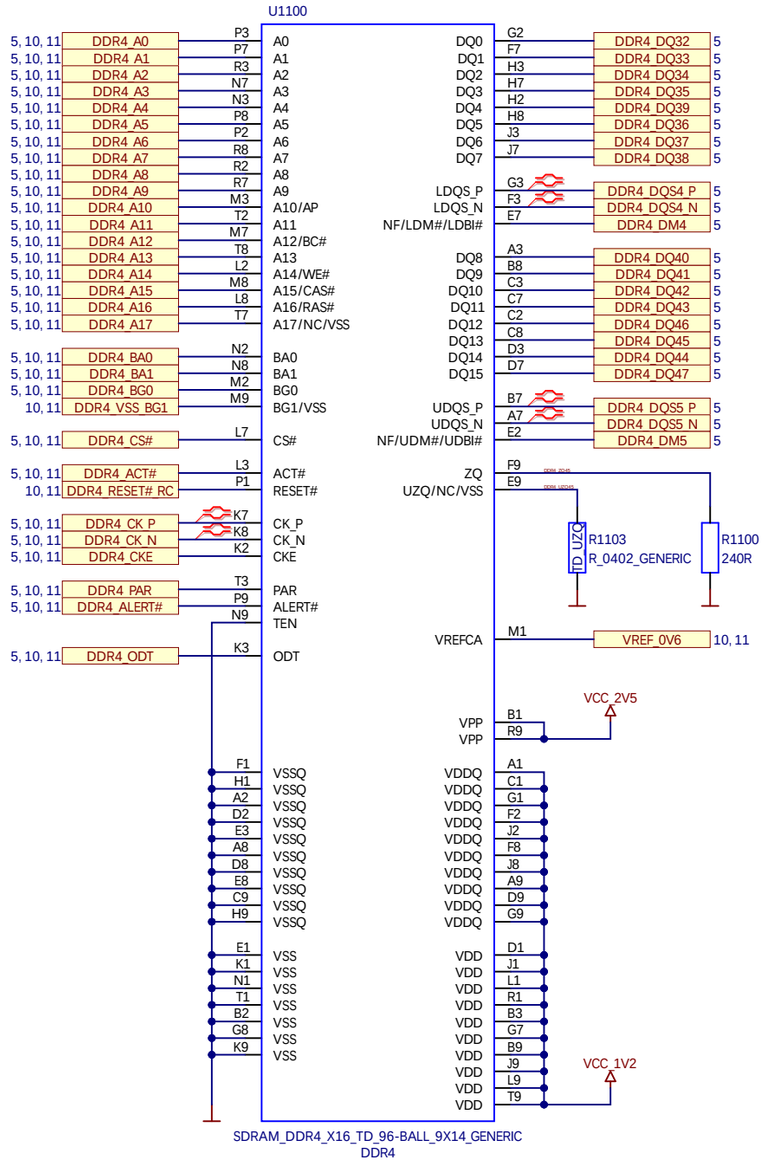

Bytes 6-7

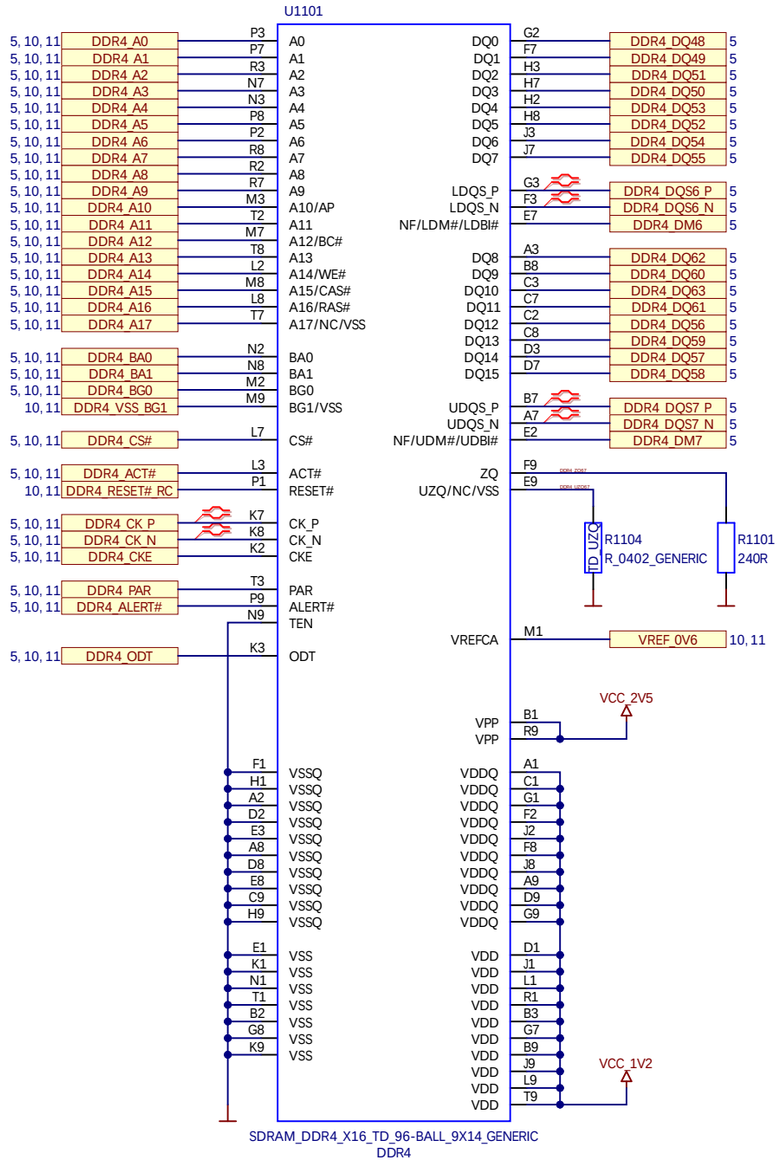

Byte 8 (ECC)

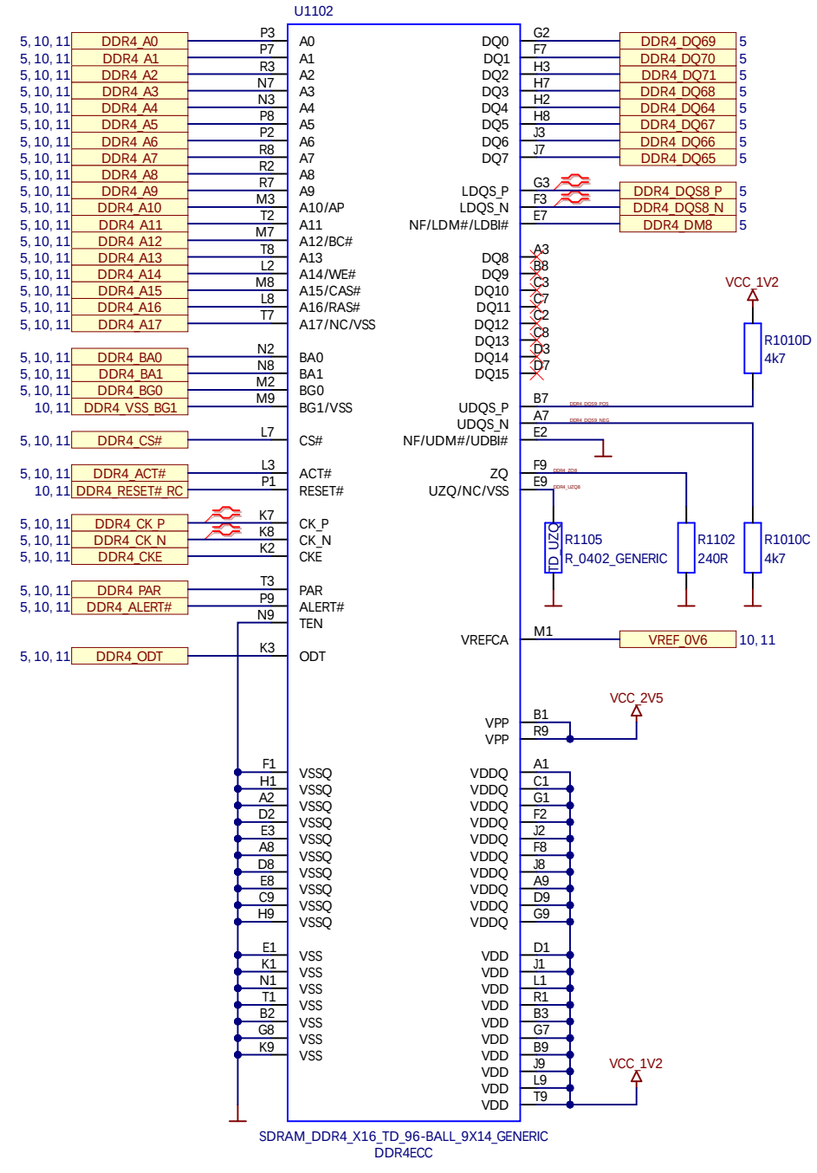

DDR4 Decoupling

not included in user schematics

ENCLUSTRA FPGA SOLUTIONS	Project ME-XU1.PrjPcb	Sheet Name ME-XU1_P11_DDR4_SDRAM_4-8.SchDoc	Customer No 0000	Revision R5.0	DNE = Do Not Equip	Confidential
	Company Enclustra FPGA Solutions	Copyright © 2023 by Enclustra FPGA Solutions	Project No 507	Designed MHEI	Date 26 Sep 2023	Sheet/sheets 11 / 23

GTR 100 MHz Oscillator

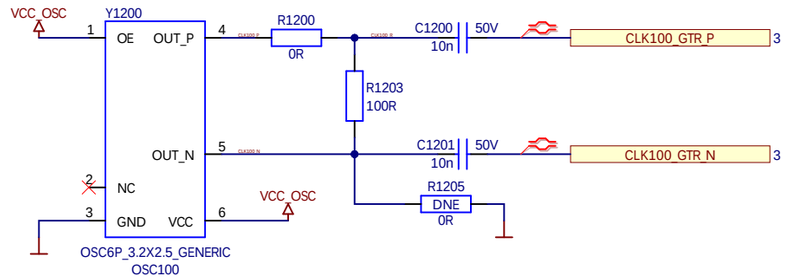

RTC Crystal

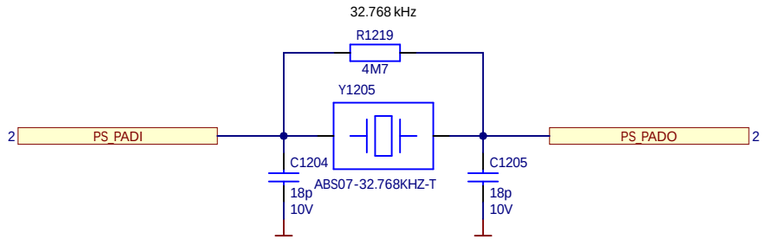

Oscillator Power Filters

not included in user schematics

GTR 27 MHz Oscillator

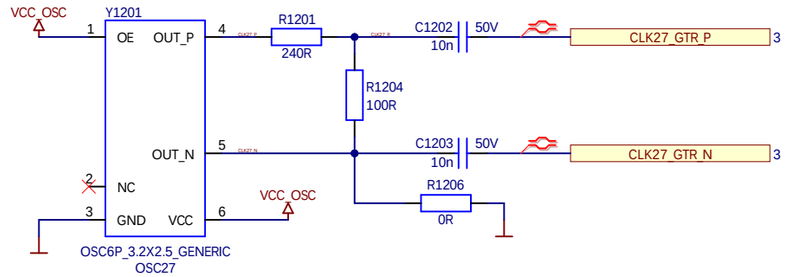

USB 24 MHz Oscillator

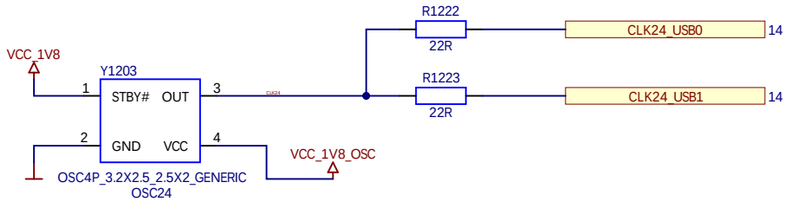

ETH 25 MHz Oscillator

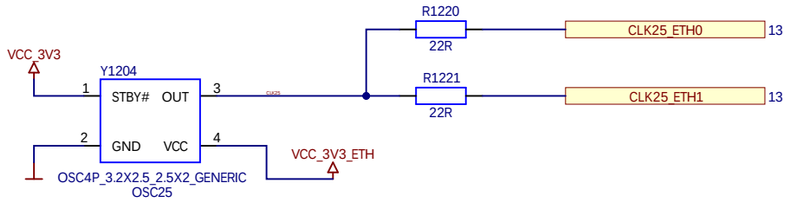

PS 33.3 MHz Oscillator

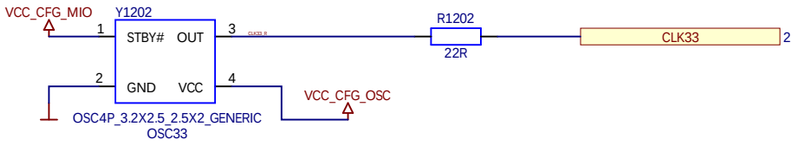

HD Bank Termination

optional

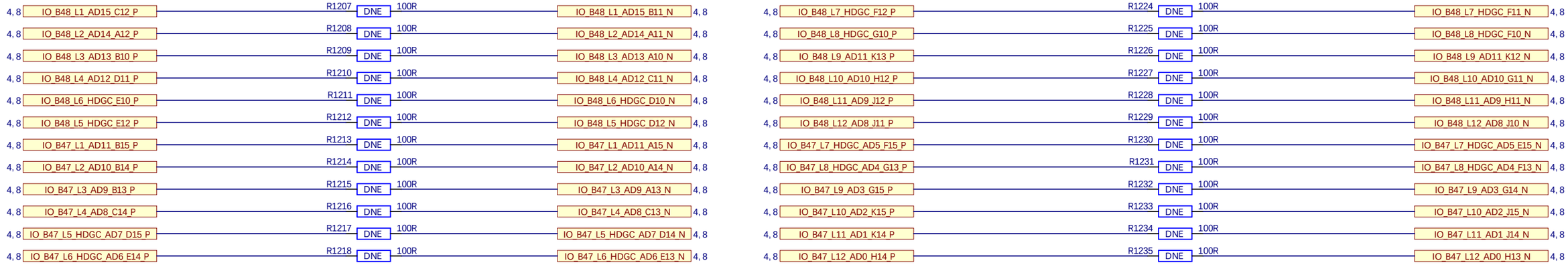

ENCLUSTRA FPGA SOLUTIONS	Project ME-XU1.PrjPcb	Sheet Name ME-XU1_P12_OSCILLATORS.SchDoc	Customer No 0000	Revision R5.0	DNE = Do Not Equip	Confidential
	Company Enclustra FPGA Solutions	Copyright © 2023 by Enclustra FPGA Solutions	Project No 507	Designed MHEI	Date 26 Sep 2023	Sheet/sheets 12 / 23

Gigabit Ethernet PHY 0

not available when using PS PCIe

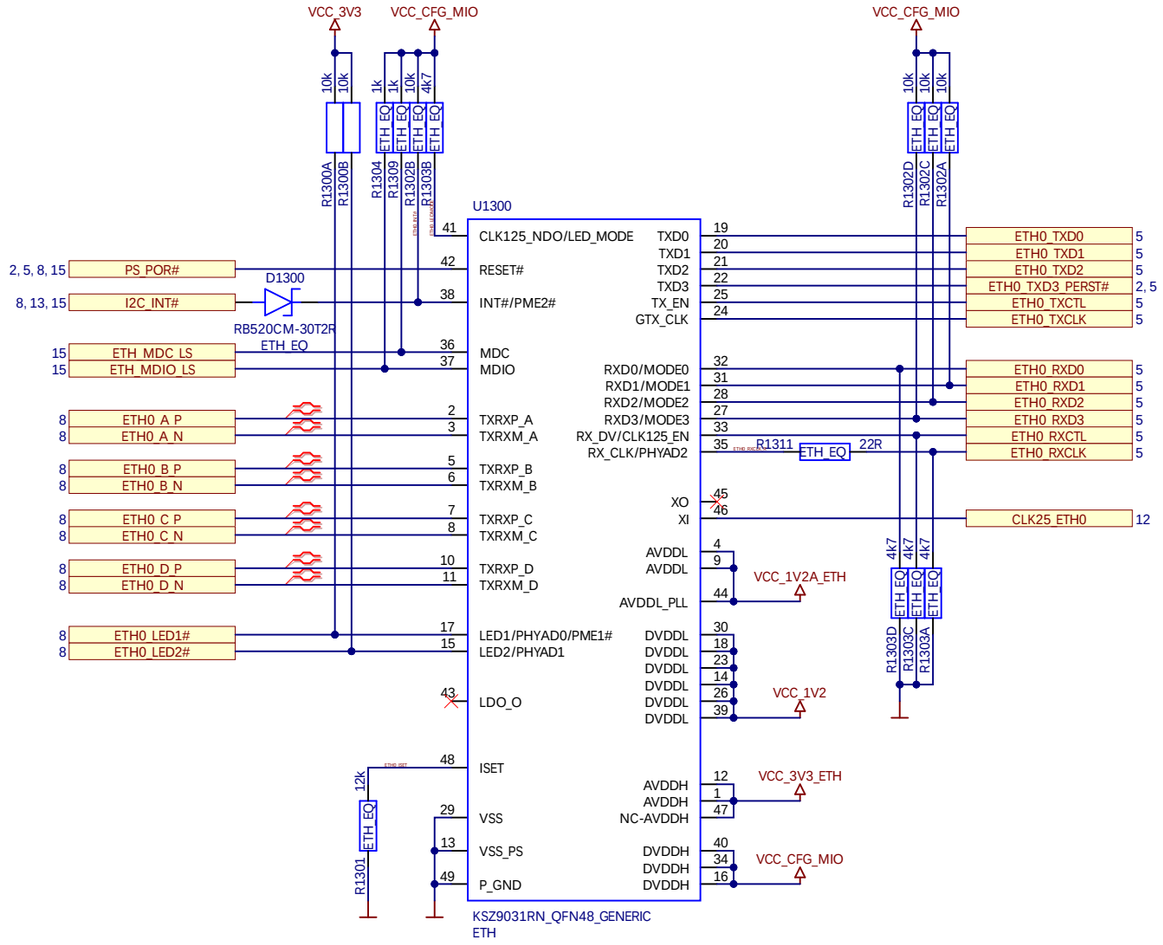

MODE<3:0> = 1110 -> RGMII, all capabilities

LED_Mode Pull up = Single LED

PhyAddress <2:0> = 011 -> 3

LED1 and LED2 are active low

Gigabit Ethernet PHY 1

not available when using USB1

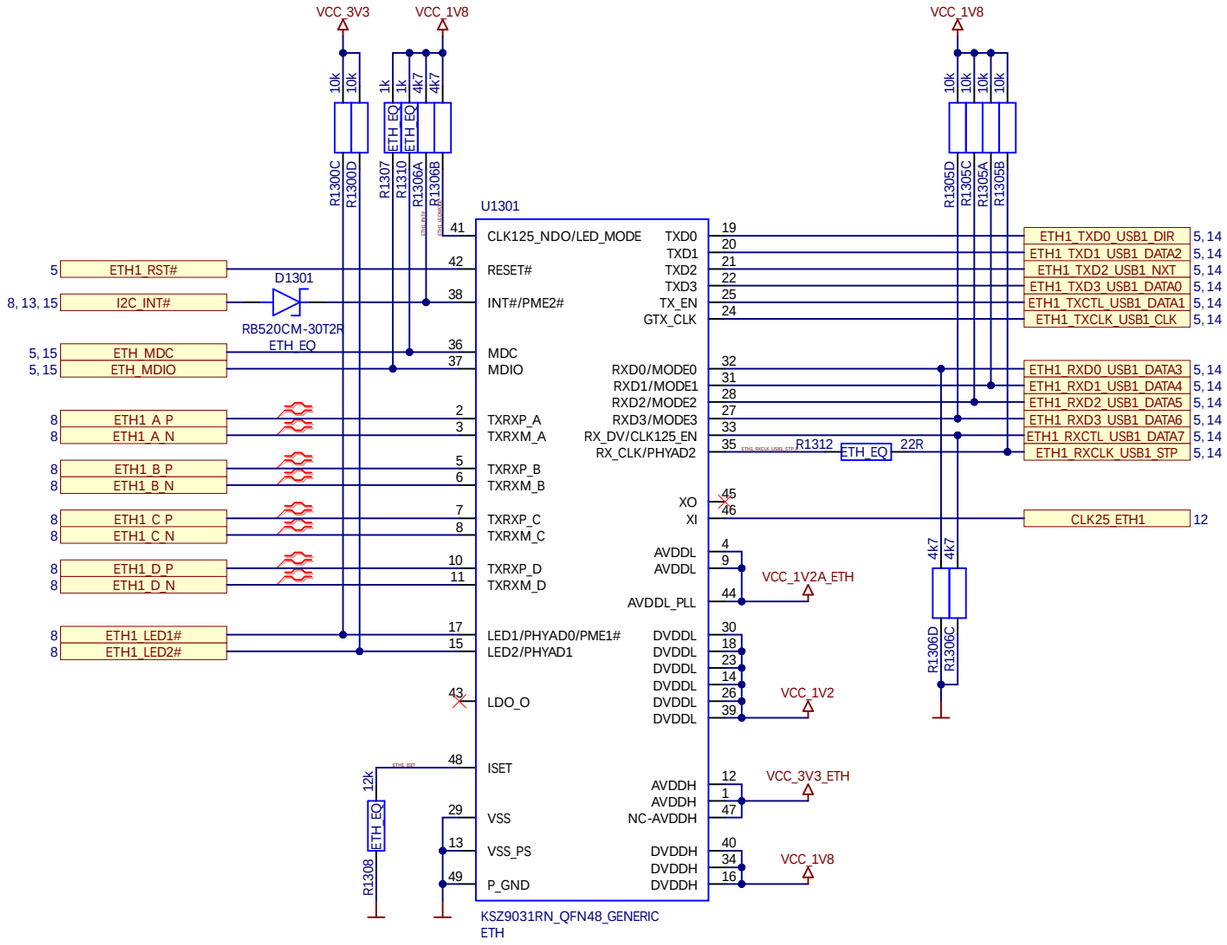

MODE<3:0> = 1110 -> RGMII, all capabilities

LED_Mode Pull up = Single LED

PhyAddress <2:0> = 111 -> 7

LED1 and LED2 are active low

Ethernet Power Filters

not included in user schematics

ENCLUSTRA FPGA SOLUTIONS	Project ME-XU1.PrjPcb	Sheet Name ME-XU1_P13_GIGABIT_ETHERNET_PHYS.SchDoc	Customer No 0000	Revision R5.0	DNE = Do Not Equip	Confidential
	Company Enclustra FPGA Solutions	Copyright © 2023 by Enclustra FPGA Solutions	Project No 507	Designed MHEI	Date 26 Sep 2023	Sheet/sheets 13 / 23

USB 2.0 Device/Host PHY 0

A-Device ID=GND, B-Device ID=Float, Not Used ID=VDD33

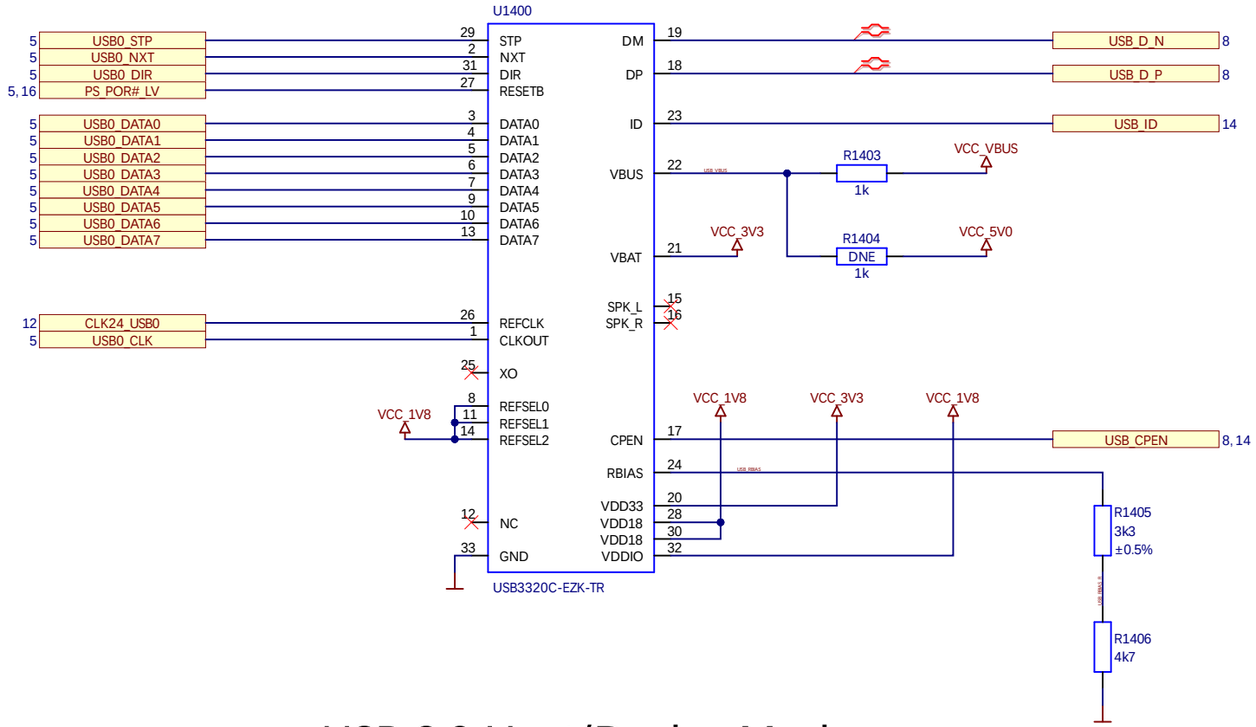

USB 2.0 Host PHY 1

not available when using Ethernet 1

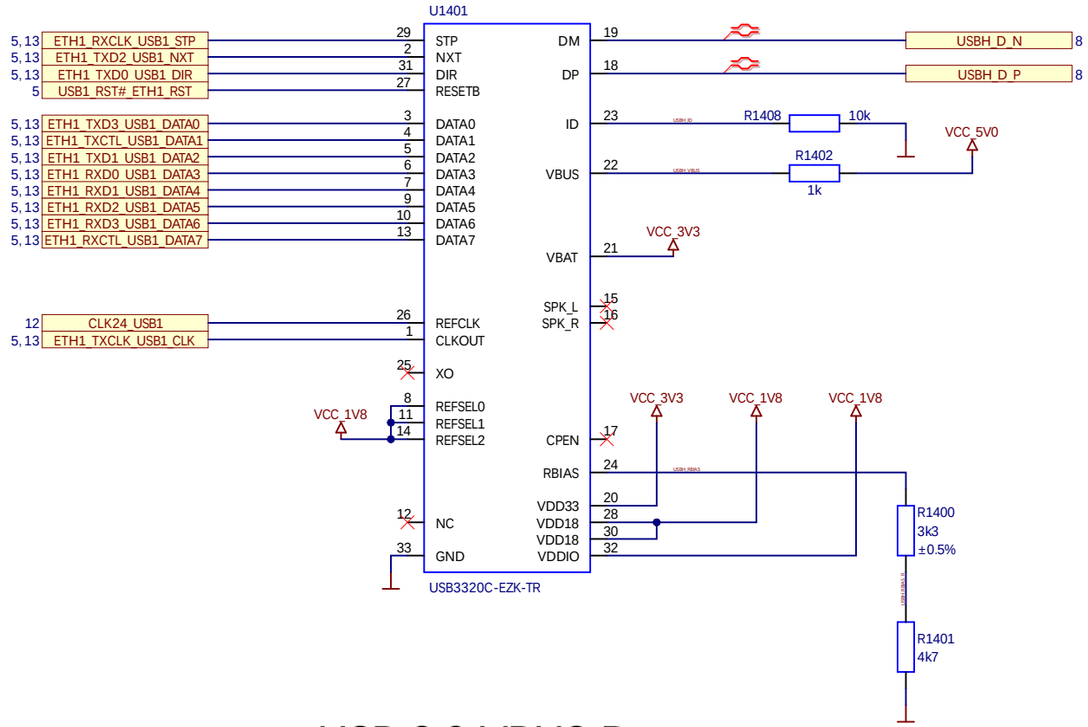

USB 2.0 Host/Device Mode

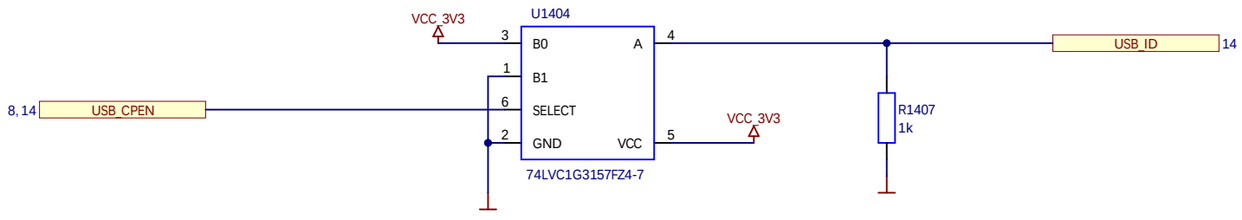

USB 2.0 VBUS Detect

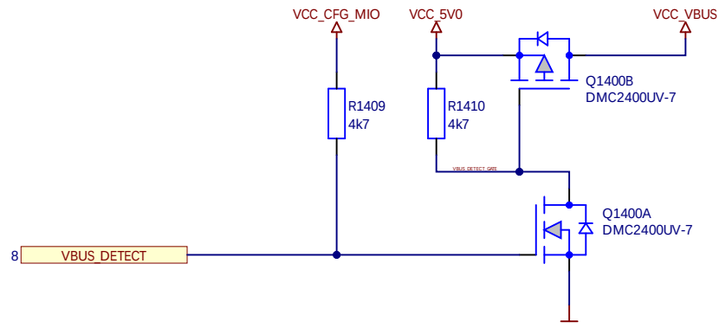

USB 2.0 Power Decoupling

not included in user schematics

ENCLUSTRA FPGA SOLUTIONS	Project ME-XU1.PrjPcb	Sheet Name ME-XU1_P14_USB2_PHYS.SchDoc	Customer No 0000	Revision R5.0	DNE = Do Not Equip	Confidential
	Company Enclustra FPGA Solutions	Copyright © 2023 by Enclustra FPGA Solutions	Project No 507	Designed MHEI	Date 26 Sep 2023	Sheet/sheets 14 / 23

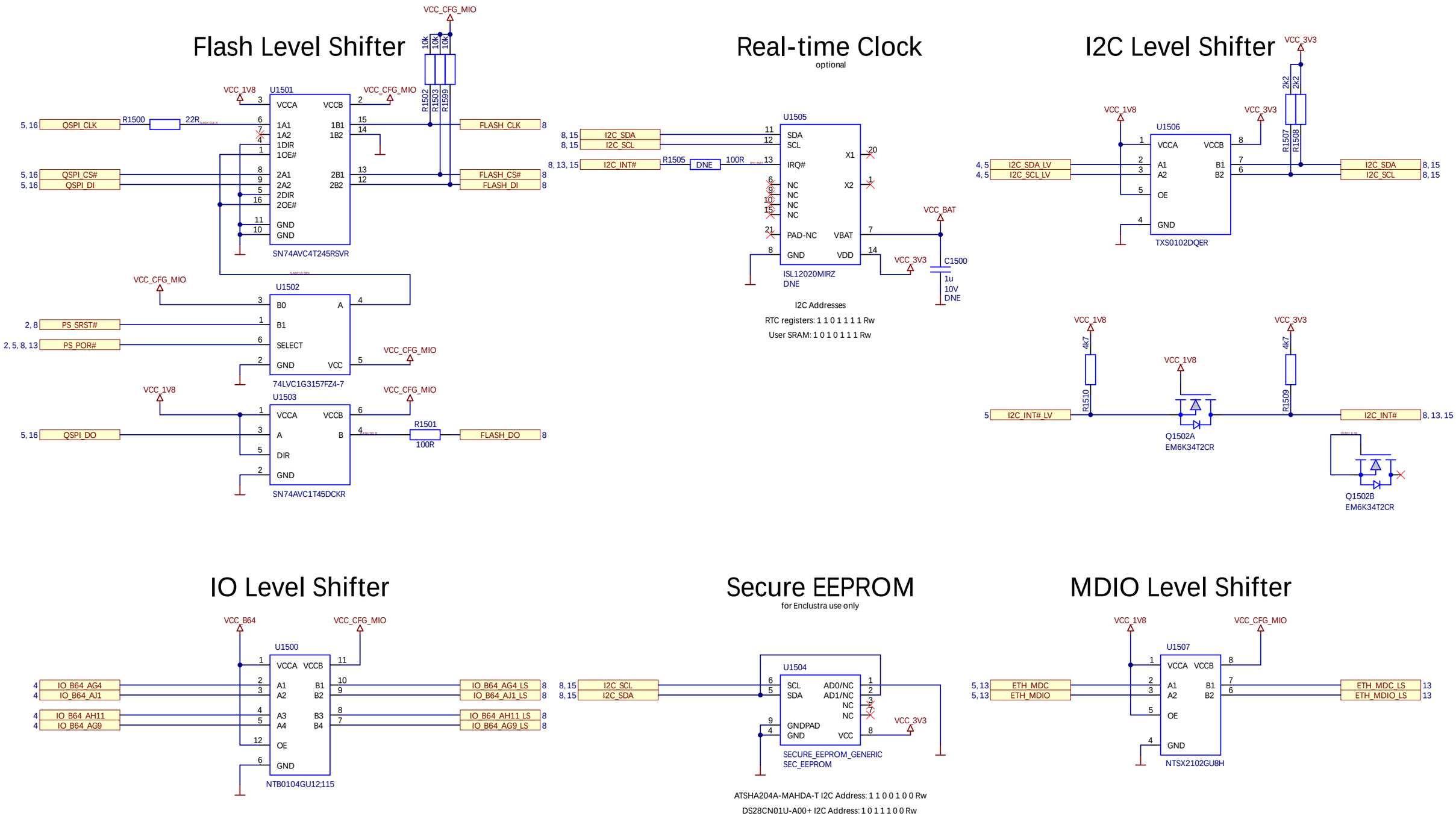

ENCLUSTRA FPGA SOLUTIONS	Project ME-XU1.PrjPcb	Sheet Name ME-XU1_P15_LEVEL_SHIFTERS_EEPROM.SchDoc	Customer No 0000	Revision R5.0	DNE = Do Not Equip	Confidential
	Company Enclustra FPGA Solutions	Copyright © 2023 by Enclustra FPGA Solutions	Project No 507	Designed MHEI	Date 26 Sep 2023	Sheet/sheets 15 / 23

Quad SPI Flash

pin compatible with Micron N25Q512A11G1240F

Micron requires VCC_FLASH = 1.8V

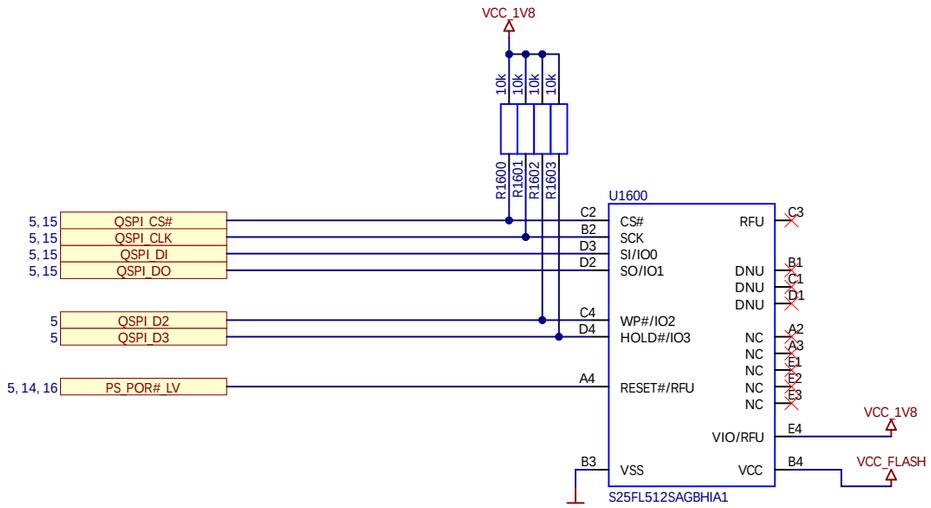

eMMC Flash

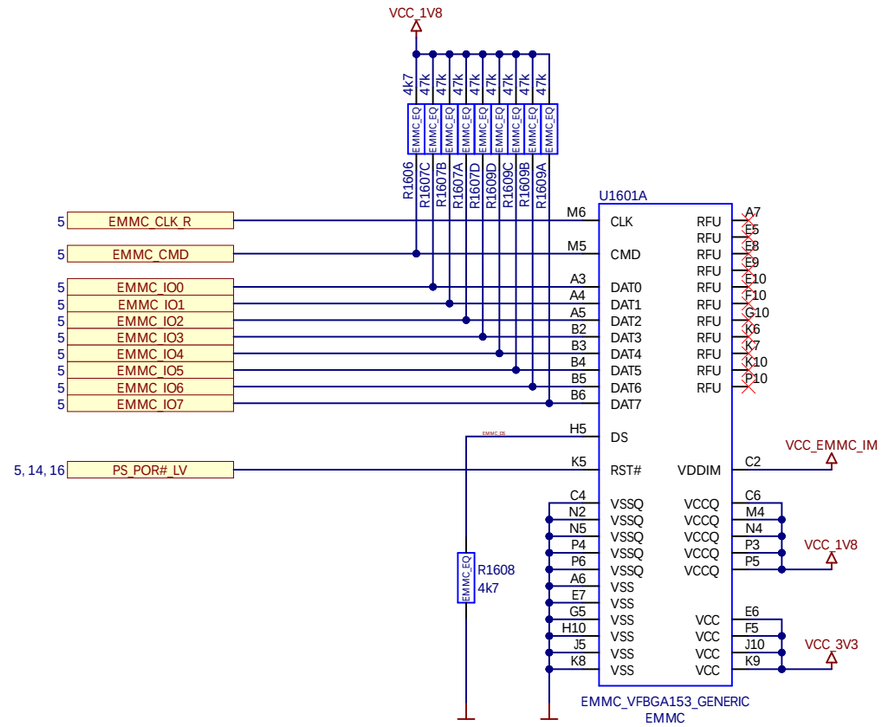

Quad SPI Power

not included in user schematics

eMMC Power

not included in user schematics

ENCLUSTRA FPGA SOLUTIONS	Project ME-XU1.PrjPcb	Sheet Name ME-XU1_P16_EMMC_QSPI_FLASH.SchDoc	Customer No 0000	Revision R5.0	DNE = Do Not Equip	Confidential
	Company Enclustra FPGA Solutions	Copyright © 2023 by Enclustra FPGA Solutions	Project No 507	Designed MHEI	Date 26 Sep 2023	Sheet/sheets 16 / 23

Buck Converter

3.3V 6A 5%

not included in user schematics

FS=800kHz Vfb = 0.6V

Buck Converter

1.2V 6A 5%

not included in user schematics

FS=800kHz Vfb = 0.6V

LDO 5.0V 0.15A

not included in user schematics

Input Power Filter

not included in user schematics

Buck Converter

0.85/0.9V/0.72V 35A 3%

not included in user schematics

FS=600kHz Vfb = 0.6V

Supported Voltage Ranges

Power Rail	Direction	Range	Tolerance
VCC_MOD	input	5 - 15V	±5%
VCC_CFG_MIO	input	1.8 - 3.3V	±5%
VCC_IO_B47	input	1.2 - 3.3V	±5%
VCC_IO_B48	input	1.2 - 3.3V	±5%
VCC_IO_B64	input	1.0 - 1.8V	±5%
VCC_IO_B65	input	1.0 - 1.8V	±5%
VCC_IO_B66	input	1.0 - 1.8V	±5%
VCC_BAT	input	2.0 - 5.5V *	-
VCC_1V8	output	1.8V	±5%
VCC_2V5	output	2.5V	±5%
VCC_3V3	output	3.3V	±5%

When using VCC_IO_B47, VCC_IO_B48 at 3.3V, the tolerance is -5% +3%.

When using VCC_IO_B64 below 1.2V, the level shifted signals of bank 64 are not operational.

When using VCC_IO_B66 below 1.8V, the I2C bus on bank 66 is not operational.

* Voltage range valid for LDO assembly option for VCC_BAT_FPGA (default assembly variant)

Buck Converter

0.85/0.9V 6A 5%
not included in user schematics
FS=800kHz Vfb = 0.6V

LDO 2.5V 0.5A

not included in user schematics

Buck Converter

0.9V 6A 5%
not included in user schematics
FS=800kHz Vfb = 0.6V

DDR4 VREF Decoupling

not included in user schematics

DDR4 Termination Voltage Regulator

not included in user schematics

Buck Converter

1.8V 3A 3%
not included in user schematics
Fs = 800kHz Vfb = 0.6V

LDO 1.5V 10 mA

not included in user schematics

Voltage Reference

not included in user schematics

Voltage Monitoring

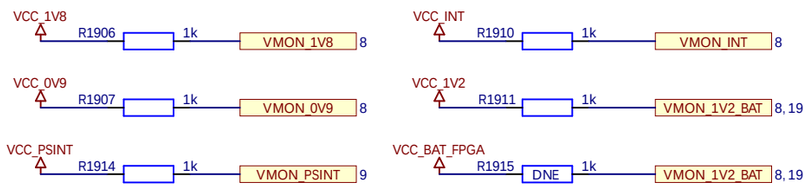

FPGA I/O Over-Voltage Protection

not included in user schematics

LDO 0.85V 0.5A

only used for -1LI, -2LE and -3E speed grade SoC FPGAs
not included in user schematics

ENCLUSTRA FPGA SOLUTIONS	Project ME-XU1.PrjPcb	Sheet Name ME-XU1_P19_POWER_1.8V_0.85V_BAT.SchDoc	Customer No 0000	Revision R5.0	DNE = Do Not Equip	Confidential
	Company Enclustra FPGA Solutions	Copyright © 2023 by Enclustra FPGA Solutions	Project No 507	Designed MHEI	Date 26 Sep 2023	Sheet/sheets 19 / 23

Module Mounting Holes M3

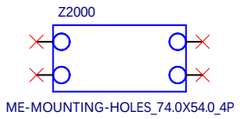

PCB Fiducials

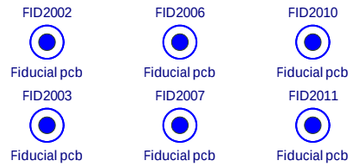

FPGA Heat Sink

optional

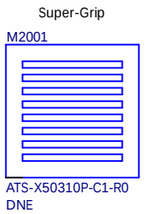

PCB / Logo / Pin-1 Marking / Text

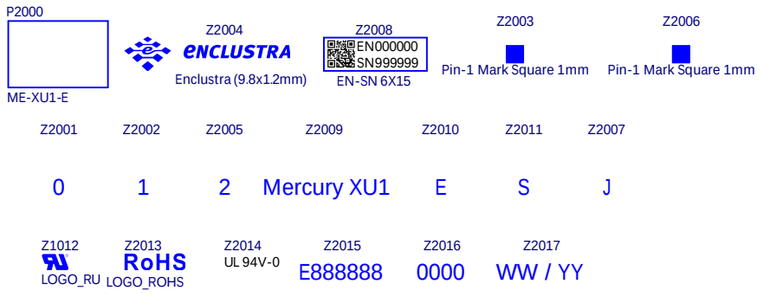

ENCLUSTRA FPGA SOLUTIONS	Project ME-XU1.PrjPcb	Sheet Name ME-XU1_P20_MECHANICS.SchDoc	Customer No 0000	Revision R5.0	DNE = Do Not Equip	Confidential
	Company Enclustra FPGA Solutions	Copyright © 2023 by Enclustra FPGA Solutions	Project No 507	Designed MHEI	Date 26 Sep 2023	Sheet/sheets 20 / 23

Component Options

FPGA	DDR4				DDR4ECC	eMMC	eMMC_EQ
Part U200A XCZU6CG-1FFVC900E EN102377	Part U1000A:1 H5AN4G6NAFR-UHC EN101655	Part U1000B:1 K4A4G165WE-BIRC EN101868	Part U1000C:1 K4A8G165WB-BIRC EN101979	Part U1000D:1 AS4C256M16D4-75BIN EN104033	Part U1102A:1 H5AN4G6NAFR-UHC EN101655	Part U1601A H26M52208FPRI EN101865	C1606, R505, R1606, R1607, R1608, R1609
Part U200B XCZU6EG-1FFVC900I EN101561	Part U1000A:2 MT40A256M16GE-083E:B EN101632	Part U1000B:2 NDQ46PFP-8NIT EN103227	Part U1000C:2 AS4C512M16D4-75BIN EN104035		Part U1102A:2 MT40A256M16GE-083E:B EN101632	Part U1601B EMMC16G-IB29-PZ90 EN102591	
Part U200C XCZU9EG-1FFVC900E EN102616	Part U1001A:1 H5AN4G6NAFR-UHC EN101655	Part U1001B:1 K4A4G165WE-BIRC EN101868	Part U1001C:1 K4A8G165WB-BIRC EN101979	Part U1001D:1 AS4C256M16D4-75BIN EN104033	Part U1102B:1 K4A4G165WE-BIRC EN101868	Part U1601C FEMDRW016G-88A43 EN104303	
Part U200D XCZU9EG-2FFVC900I EN101562	Part U1001A:2 MT40A256M16GE-083E:B EN101632	Part U1001B:2 NDQ46PFP-8NIT EN103227	Part U1001C:2 AS4C512M16D4-75BIN EN104035		Part U1102B:2 NDQ46PFP-8NIT EN103227		
Part U200E XCZU9EG-3FFVC900E EN102113	Part U1100A:1 H5AN4G6NAFR-UHC EN101655	Part U1100B:1 K4A4G165WE-BIRC EN101868	Part U1100C:1 K4A8G165WB-BIRC EN101979	Part U1100D:1 AS4C256M16D4-75BIN EN104033	Part U1102C:1 K4A8G165WB-BIRC EN101979		
Part U200F XCZU15EG-1FFVC900E EN102609	Part U1100A:2 MT40A256M16GE-083E:B EN101632	Part U1100B:2 NDQ46PFP-8NIT EN103227	Part U1100C:2 AS4C512M16D4-75BIN EN104035		Part U1102C:2 AS4C512M16D4-75BIN EN104035		
Part U200G XCZU15EG-2FFVC900I EN101957	Part U1101A:1 H5AN4G6NAFR-UHC EN101655	Part U1101B:1 K4A4G165WE-BIRC EN101868	Part U1101C:1 K4A8G165WB-BIRC EN101979	Part U1101D:1 AS4C256M16D4-75BIN EN104033	Part U1102D:1 AS4C256M16D4-75BIN EN104033		
	Part U1101A:2 MT40A256M16GE-083E:B EN101632	Part U1101B:2 NDQ46PFP-8NIT EN103227	Part U1101C:2 AS4C512M16D4-75BIN EN104035				

Component Assembly

Assembly Variant	FPGA	DDR4	DDR4ECC	eMMC	eMMC_EQ
Variant EN105181:0 ME-XU1-6CG-1E-D11E-R5.0	Option EN105181:1 FPGA EN102377	Option EN105181:2 DDR4 EN104033	Option EN105181:3 DDR4ECC EN104033	Option EN105181:4 EMMC EN104303	Option EN105181:5 EMMC_EQ
Variant EN105180:0 ME-XU1-6CG-1E-D11E-G1-R5.0	Option EN105180:1 FPGA EN102377	Option EN105180:2 DDR4 EN104033	Option EN105180:3 DDR4ECC EN104033	Option EN105180:4 EMMC EN104303	Option EN105180:5 EMMC_EQ
Variant EN105183:0 ME-XU1-6EG-1I-D11E-R5.0	Option EN105183:1 FPGA EN101561	Option EN105183:2 DDR4 EN104033	Option EN105183:3 DDR4ECC EN104033	Option EN105183:4 EMMC EN104303	Option EN105183:5 EMMC_EQ
Variant EN105182:0 ME-XU1-6EG-1I-D11E-G1-R5.0	Option EN105182:1 FPGA EN101561	Option EN105182:2 DDR4 EN104033	Option EN105182:3 DDR4ECC EN104033	Option EN105182:4 EMMC EN104303	Option EN105182:5 EMMC_EQ
Variant EN105190:0 ME-XU1-9EG-1E-D11E-G1-R5.0	Option EN105190:1 FPGA EN102616	Option EN105190:2 DDR4 EN104033	Option EN105190:3 DDR4ECC EN104033	Option EN105190:4 EMMC EN104303	Option EN105190:5 EMMC_EQ
Variant EN105192:0 ME-XU1-9EG-2I-D12E-R5.0	Option EN105192:1 FPGA EN101562	Option EN105192:2 DDR4 EN104035	Option EN105192:3 DDR4ECC EN104035	Option EN105192:4 EMMC EN104303	Option EN105192:5 EMMC_EQ
Variant EN105191:0 ME-XU1-9EG-2I-D12E-G1-R5.0	Option EN105191:1 FPGA EN101562	Option EN105191:2 DDR4 EN104035	Option EN105191:3 DDR4ECC EN104035	Option EN105191:4 EMMC EN104303	Option EN105191:5 EMMC_EQ
Variant EN105193:0 ME-XU1-9EG-3E-D12E-R5.0	Option EN105193:1 FPGA EN102113	Option EN105193:2 DDR4 EN104035	Option EN105193:3 DDR4ECC EN104035	Option EN105193:4 EMMC EN104303	Option EN105193:5 EMMC_EQ
Variant EN105176:0 ME-XU1-15EG-1E-D12E-G1-R5.0	Option EN105176:1 FPGA EN102609	Option EN105176:2 DDR4 EN104035	Option EN105176:3 DDR4ECC EN104035	Option EN105176:4 EMMC EN104303	Option EN105176:5 EMMC_EQ
Variant EN105178:0 ME-XU1-15EG-2I-D12E-R5.0	Option EN105178:1 FPGA EN101957	Option EN105178:2 DDR4 EN104035	Option EN105178:3 DDR4ECC EN104035	Option EN105178:4 EMMC EN104303	Option EN105178:5 EMMC_EQ
Variant EN105177:0 ME-XU1-15EG-2I-D12E-G1-R5.0	Option EN105177:1 FPGA EN101957	Option EN105177:2 DDR4 EN104035	Option EN105177:3 DDR4ECC EN104035	Option EN105177:4 EMMC EN104303	Option EN105177:5 EMMC_EQ
Variant EN105179:0 ME-XU1-6CG-1E-D11E-G1-NE-R5.0	Option EN105179:1 FPGA EN102377	Option EN105179:2 DDR4 EN104033	Option EN105179:3 DDR4ECC EN104033	Option EN105179:4 EMMC EN104303	Option EN105179:5 EMMC_EQ
Variant EN105186:0 ME-XU1-6EG-1I-D12E-NA-R5.0	Option EN105186:1 FPGA EN101561	Option EN105186:2 DDR4 EN104035	Option EN105186:3 DDR4ECC EN104035	Option EN105186:4 EMMC DNE	Option EN105186:5 EMMC_EQ DNE

Component Options

Ethernet PHY	ETH_EQ	OSC27	OSC24	MGT_SEL	SEC_EEPROM	OSC25	OSC33	OSC100
Part U1300A KSZ9031RNXIA EN101934 Part U1300B KSZ9031RNXIC EN104260 Part U1301A KSZ9031RNXIA EN101934 Part U1301B KSZ9031RNXIC EN104260	D1300, R1301, R1302, R1303, R1304, R1309, D1301, R1307, R1308, R1310, R1311, R1312	Part Y1201A ASEMPC-27.000MHZ-LR-T EN101608 Part Y1201B ASEMPC-27.000MHZ-XR-T EN101609	Part Y1203A ASDMB-24.000MHZ-LC-T EN101221 Part Y1203B ASEMB-24.000MHZ-LC-T EN101187	R207, R209, R211, R213, R215, R217, R219. R221, R223, R225 or R208, R210, R212, R214, R216, R218, R220. R222, R224, R226	Part U1504A ATSHA204A-MAHDA-T EN100827 Part U1504B DS28CN01U-A00+ EN100280	Part Y1204A ASDMB-25.000MHZ-LC-T EN101588 Part Y1204B ASEMB-25.000MHZ-LC-T EN101589	Part Y1202A ASDMB-33.333MHZ-LC-T EN100285 Part Y1202B ASEMB-33.333MHZ-LC-T EN100914	Part Y1200A DSC1123CI2-100.0000 EN103018 Part Y1200B SMDN-100000-3CW4T00 EN104331

Component Assembly

Ethernet PHY	ETH_EQ	OSC27	OSC24	MGT_SEL	SEC_EEPROM	OSC25	OSC33	OSC100
Option EN105181:6 ETH EN101934	Option EN105181:7 ETH_EQ	Option EN105181:8 OSC27 EN101608	Option EN105181:9 OSC24 EN101221	Option EN105181:10 MGT_SEL DNE	Option EN105181:11 SEC_EEPROM EN100827	Option EN105181:12 OSC25 EN101588	Option EN105181:13 OSC33 EN100914	Option EN105181:14 OSC100 EN103018
Option EN105180:6 ETH EN101934	Option EN105180:7 ETH_EQ	Option EN105180:8 OSC27 EN101608	Option EN105180:9 OSC24 EN101221	Option EN105180:10 MGT_SEL	Option EN105180:11 SEC_EEPROM EN100827	Option EN105180:12 OSC25 EN101588	Option EN105180:13 OSC33 EN100914	Option EN105180:14 OSC100 EN103018
Option EN105183:6 ETH EN101934	Option EN105183:7 ETH_EQ	Option EN105183:8 OSC27 EN101608	Option EN105183:9 OSC24 EN101221	Option EN105183:10 MGT_SEL DNE	Option EN105183:11 SEC_EEPROM EN100827	Option EN105183:12 OSC25 EN101588	Option EN105183:13 OSC33 EN100914	Option EN105183:14 OSC100 EN103018
Option EN105182:6 ETH EN101934	Option EN105182:7 ETH_EQ	Option EN105182:8 OSC27 EN101608	Option EN105182:9 OSC24 EN101221	Option EN105182:10 MGT_SEL	Option EN105182:11 SEC_EEPROM EN100827	Option EN105182:12 OSC25 EN101588	Option EN105182:13 OSC33 EN100914	Option EN105182:14 OSC100 EN103018
Option EN105190:6 ETH EN101934	Option EN105190:7 ETH_EQ	Option EN105190:8 OSC27 EN101608	Option EN105190:9 OSC24 EN101221	Option EN105190:10 MGT_SEL	Option EN105190:11 SEC_EEPROM EN100827	Option EN105190:12 OSC25 EN101588	Option EN105190:13 OSC33 EN100914	Option EN105190:14 OSC100 EN103018
Option EN105192:6 ETH EN101934	Option EN105192:7 ETH_EQ	Option EN105192:8 OSC27 EN101608	Option EN105192:9 OSC24 EN101221	Option EN105192:10 MGT_SEL DNE	Option EN105192:11 SEC_EEPROM EN100827	Option EN105192:12 OSC25 EN101588	Option EN105192:13 OSC33 EN100914	Option EN105192:14 OSC100 EN103018
Option EN105191:6 ETH EN101934	Option EN105191:7 ETH_EQ	Option EN105191:8 OSC27 EN101608	Option EN105191:9 OSC24 EN101221	Option EN105191:10 MGT_SEL	Option EN105191:11 SEC_EEPROM EN100827	Option EN105191:12 OSC25 EN101588	Option EN105191:13 OSC33 EN100914	Option EN105191:14 OSC100 EN103018
Option EN105193:6 ETH EN101934	Option EN105193:7 ETH_EQ	Option EN105193:8 OSC27 EN101608	Option EN105193:9 OSC24 EN101221	Option EN105193:10 MGT_SEL DNE	Option EN105193:11 SEC_EEPROM EN100827	Option EN105193:12 OSC25 EN101588	Option EN105193:13 OSC33 EN100914	Option EN105193:14 OSC100 EN103018
Option EN105176:6 ETH EN101934	Option EN105176:7 ETH_EQ	Option EN105176:8 OSC27 EN101608	Option EN105176:9 OSC24 EN101221	Option EN105176:10 MGT_SEL	Option EN105176:11 SEC_EEPROM EN100827	Option EN105176:12 OSC25 EN101588	Option EN105176:13 OSC33 EN100914	Option EN105176:14 OSC100 EN103018
Option EN105178:6 ETH EN101934	Option EN105178:7 ETH_EQ	Option EN105178:8 OSC27 EN101608	Option EN105178:9 OSC24 EN101221	Option EN105178:10 MGT_SEL DNE	Option EN105178:11 SEC_EEPROM EN100827	Option EN105178:12 OSC25 EN101588	Option EN105178:13 OSC33 EN100914	Option EN105178:14 OSC100 EN103018
Option EN105177:6 ETH EN101934	Option EN105177:7 ETH_EQ	Option EN105177:8 OSC27 EN101608	Option EN105177:9 OSC24 EN101221	Option EN105177:10 MGT_SEL	Option EN105177:11 SEC_EEPROM EN100827	Option EN105177:12 OSC25 EN101588	Option EN105177:13 OSC33 EN100914	Option EN105177:14 OSC100 EN103018
Option EN105179:6 ETH DNE	Option EN105179:7 ETH_EQ DNE	Option EN105179:8 OSC27 EN101608	Option EN105179:9 OSC24 EN101221	Option EN105179:10 MGT_SEL	Option EN105179:11 SEC_EEPROM EN100827	Option EN105179:12 OSC25 DNE	Option EN105179:13 OSC33 EN100914	Option EN105179:14 OSC100 EN103018
Option EN105186:6 ETH EN101934	Option EN105186:7 ETH_EQ	Option EN105186:8 OSC27 EN101608	Option EN105186:9 OSC24 EN101221	Option EN105186:10 MGT_SEL DNE	Option EN105186:11 SEC_EEPROM EN100827	Option EN105186:12 OSC25 EN101588	Option EN105186:13 OSC33 EN100914	Option EN105186:14 OSC100 EN103018

ENCLUSTRA FPGA SOLUTIONS	Project ME-XU1.PrjPcb	Sheet Name ME-XU1_P22_ASSEMBLY_VARIANTS_2.SchDoc	Customer No 0000	Revision R5.0	DNE = Do Not Equip	Confidential
	Company Enclustra FPGA Solutions	Copyright © 2023 by Enclustra FPGA Solutions	Project No 507	Designed MHEI	Date 26 Sep 2023	Sheet/sheets 22 / 23

Component Options

L0U68	L2U2	L_VCC_INT	L1U5	LDO_0V85	PSINT_A	PSINT_B	VCC_INT_A	VCC_INT_B	TD_UZQ		TD
Part L1703A 0u68 EN102112	Part L1900A 2u2 EN102185	Part L1702A 100n EN102190	Part L1700A 1u5 EN102613	R1912 - R1913, U1905 or R1909	Part R1800A 100R EN101363	Part R1801A 3k3 EN101391	Part R1725A 10k EN101365	Part R1727A 4k7 EN101399	Part R1008A 0R EN101361	Part R1104A 0R EN101361	DDR: R1014, R1015 or R1016
Part L1703B 0u68 EN102445	Part L1900B 2u2 EN102208	Part L1702B 220n EN102189	Part L1700B 1u5 EN102207		Part R1800B 0R EN101361	Part R1801B 4k7 EN101399	Part R1725B 47k EN101397	Part R1727B 100R EN101363	Part R1008B 240R EN101382	Part R1104B 240R EN101382	
Part L1800A 0u68 EN102112	Part L1900C 2u2 EN101680								Part R1009A 0R EN101361	Part R1105A 0R EN101361	
Part L1800B 0u68 EN102445									Part R1009B 240R EN101382	Part R1105B 240R EN101382	
Part L1801A 0u68 EN102112									Part R1103A 0R EN101361		
Part L1801B 0u68 EN102445									Part R1103B 240R EN101382	0R for normal 240R for TD	DNE for normal, assembled for TD

Component Assembly

L0U68	L2U2	L_VCC_INT	L1U5	LDO_0V85	PSINT_A	PSINT_B	VCC_INT_A	VCC_INT_B	TD_UZQ	TD
Option EN105181:15 L0U68 EN102112	Option EN105181:16 L2U2 EN101680	Option EN105181:17 L_VCC_INT EN102190	Option EN105181:18 L1U5 EN102207	Option EN105181:19 LDO_0V85 DNE	Option EN105181:20 PSINT_A EN101363	Option EN105181:21 PSINT_B EN101391	Option EN105181:22 VCC_INT_A EN101365	Option EN105181:23 VCC_INT_B EN101399	Option EN105181:24 TD_UZQ EN101361	Option EN105181:25 TD DNE
Option EN105180:15 L0U68 EN102112	Option EN105180:16 L2U2 EN101680	Option EN105180:17 L_VCC_INT EN102190	Option EN105180:18 L1U5 EN102207	Option EN105180:19 LDO_0V85 DNE	Option EN105180:20 PSINT_A EN101363	Option EN105180:21 PSINT_B EN101391	Option EN105180:22 VCC_INT_A EN101365	Option EN105180:23 VCC_INT_B EN101399	Option EN105180:24 TD_UZQ EN101361	Option EN105180:25 TD DNE
Option EN105183:15 L0U68 EN102112	Option EN105183:16 L2U2 EN101680	Option EN105183:17 L_VCC_INT EN102190	Option EN105183:18 L1U5 EN102207	Option EN105183:19 LDO_0V85 DNE	Option EN105183:20 PSINT_A EN101363	Option EN105183:21 PSINT_B EN101391	Option EN105183:22 VCC_INT_A EN101365	Option EN105183:23 VCC_INT_B EN101399	Option EN105183:24 TD_UZQ EN101361	Option EN105183:25 TD DNE
Option EN105182:15 L0U68 EN102112	Option EN105182:16 L2U2 EN101680	Option EN105182:17 L_VCC_INT EN102190	Option EN105182:18 L1U5 EN102207	Option EN105182:19 LDO_0V85 DNE	Option EN105182:20 PSINT_A EN101363	Option EN105182:21 PSINT_B EN101391	Option EN105182:22 VCC_INT_A EN101365	Option EN105182:23 VCC_INT_B EN101399	Option EN105182:24 TD_UZQ EN101361	Option EN105182:25 TD DNE
Option EN105190:15 L0U68 EN102112	Option EN105190:16 L2U2 EN101680	Option EN105190:17 L_VCC_INT EN102190	Option EN105190:18 L1U5 EN102207	Option EN105190:19 LDO_0V85 DNE	Option EN105190:20 PSINT_A EN101363	Option EN105190:21 PSINT_B EN101391	Option EN105190:22 VCC_INT_A EN101365	Option EN105190:23 VCC_INT_B EN101399	Option EN105190:24 TD_UZQ EN101361	Option EN105190:25 TD DNE
Option EN105192:15 L0U68 EN102112	Option EN105192:16 L2U2 EN101680	Option EN105192:17 L_VCC_INT EN102190	Option EN105192:18 L1U5 EN102207	Option EN105192:19 LDO_0V85 DNE	Option EN105192:20 PSINT_A EN101363	Option EN105192:21 PSINT_B EN101391	Option EN105192:22 VCC_INT_A EN101365	Option EN105192:23 VCC_INT_B EN101399	Option EN105192:24 TD_UZQ EN101361	Option EN105192:25 TD DNE
Option EN105191:15 L0U68 EN102112	Option EN105191:16 L2U2 EN101680	Option EN105191:17 L_VCC_INT EN102190	Option EN105191:18 L1U5 EN102207	Option EN105191:19 LDO_0V85 DNE	Option EN105191:20 PSINT_A EN101363	Option EN105191:21 PSINT_B EN101391	Option EN105191:22 VCC_INT_A EN101365	Option EN105191:23 VCC_INT_B EN101399	Option EN105191:24 TD_UZQ EN101361	Option EN105191:25 TD DNE
Option EN105193:15 L0U68 EN102112	Option EN105193:16 L2U2 EN101680	Option EN105193:17 L_VCC_INT EN102190	Option EN105193:18 L1U5 EN102207	Option EN105193:19 LDO_0V85	Option EN105193:20 PSINT_A EN101361	Option EN105193:21 PSINT_B EN101399	Option EN105193:22 VCC_INT_A EN101397	Option EN105193:23 VCC_INT_B EN101363	Option EN105193:24 TD_UZQ EN101361	Option EN105193:25 TD DNE
Option EN105176:15 L0U68 EN102112	Option EN105176:16 L2U2 EN101680	Option EN105176:17 L_VCC_INT EN102190	Option EN105176:18 L1U5 EN102207	Option EN105176:19 LDO_0V85 DNE	Option EN105176:20 PSINT_A EN101363	Option EN105176:21 PSINT_B EN101391	Option EN105176:22 VCC_INT_A EN101365	Option EN105176:23 VCC_INT_B EN101399	Option EN105176:24 TD_UZQ EN101361	Option EN105176:25 TD DNE
Option EN105178:15 L0U68 EN102112	Option EN105178:16 L2U2 EN101680	Option EN105178:17 L_VCC_INT EN102190	Option EN105178:18 L1U5 EN102207	Option EN105178:19 LDO_0V85 DNE	Option EN105178:20 PSINT_A EN101363	Option EN105178:21 PSINT_B EN101391	Option EN105178:22 VCC_INT_A EN101365	Option EN105178:23 VCC_INT_B EN101399	Option EN105178:24 TD_UZQ EN101361	Option EN105178:25 TD DNE
Option EN105177:15 L0U68 EN102112	Option EN105177:16 L2U2 EN101680	Option EN105177:17 L_VCC_INT EN102190	Option EN105177:18 L1U5 EN102207	Option EN105177:19 LDO_0V85 DNE	Option EN105177:20 PSINT_A EN101363	Option EN105177:21 PSINT_B EN101391	Option EN105177:22 VCC_INT_A EN101365	Option EN105177:23 VCC_INT_B EN101399	Option EN105177:24 TD_UZQ EN101361	Option EN105177:25 TD DNE
Option EN105179:15 L0U68 EN102112	Option EN105179:16 L2U2 EN101680	Option EN105179:17 L_VCC_INT EN102190	Option EN105179:18 L1U5 EN102207	Option EN105179:19 LDO_0V85 DNE	Option EN105179:20 PSINT_A EN101363	Option EN105179:21 PSINT_B EN101391	Option EN105179:22 VCC_INT_A EN101365	Option EN105179:23 VCC_INT_B EN101399	Option EN105179:24 TD_UZQ EN101361	Option EN105179:25 TD DNE
Option EN105186:15 L0U68 EN102112	Option EN105186:16 L2U2 EN101680	Option EN105186:17 L_VCC_INT EN102190	Option EN105186:18 L1U5 EN102207	Option EN105186:19 LDO_0V85 DNE	Option EN105186:20 PSINT_A EN101363	Option EN105186:21 PSINT_B EN101391	Option EN105186:22 VCC_INT_A EN101365	Option EN105186:23 VCC_INT_B EN101399	Option EN105186:24 TD_UZQ EN101361	Option EN105186:25 TD DNE