Enclustra User Schematics

Mercury XU5 Revision 1.3

Disclaimer

User schematics do not include proprietary Enclustra design elements, such as power supply circuits.
These circuits use optimized designs which are extremely compact and remain proprietary to Enclustra.
The user manual provides all necessary information to use the module and its interfaces.

User schematics are provided after purchase of Enclustra hardware, and may also be provided in certain cases before purchase, to assist in product evaluation.
No part of the schematics may be copied or modified without written permission from Enclustra.

Full schematics, including a full bill-of-materials, may be available through the purchase of a hardware licence for the product in question.
Please contact Enclustra Sales for more information.

Note: DNE = Do Not Equip (parts not equipped by default)

© Enclustra GmbH

Mercury XU5 SoC Module

Revision 1.3

Sheet 1: Cover
Sheet 2: SoC FPGA Configuration
Sheet 3: SoC FPGA HD Banks | User LEDs
Sheet 4: SoC FPGA HP | MGT Banks
Sheet 5: SoC FPGA PS Banks
Sheet 6: SoC FPGA Power
Sheet 7: Power Decoupling
Sheet 8: Module Connectors A | B
Sheet 9: DDR4 PL SDRAM
Sheet 10: DDR4 PS SDRAM Bytes 0-3
Sheet 11: DDR4 PS SDRAM Bytes 4-8 (ECC)
Sheet 12: Oscillators
Sheet 13: Dual Gigabit Ethernet PHYs | I2C
Sheet 14: IO MGT Selection
Sheet 15: USB 2.0 PHYs
Sheet 16: eMMC Flash | QSPI Flash
Sheet 17: Power 0.72/0.85/0.9V | 3.3V | 5.0V
Sheet 18: Power 1.2V | 0.85/0.9V | VTT
Sheet 19: Power 1.8V | 0.9V | 2.5V
Sheet 20: Mechanics
Sheet 21: Component Assembly
Sheet 22: Component Assembly
Sheet 23: Component Assembly

Boot Mode Selection

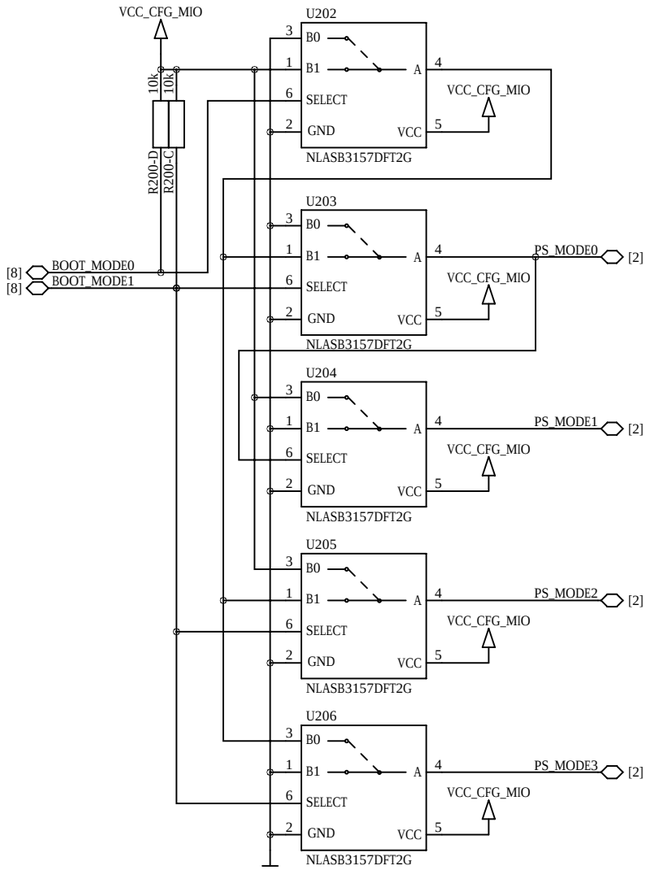

For compatibility with ZX1 / ZX5

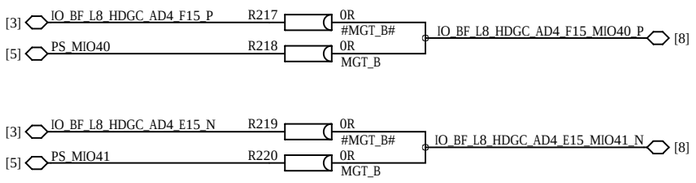

Reset Circuit

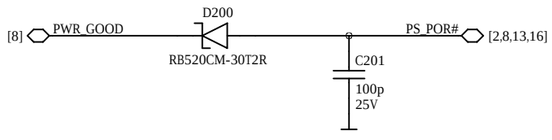

MDIO Level Shifter

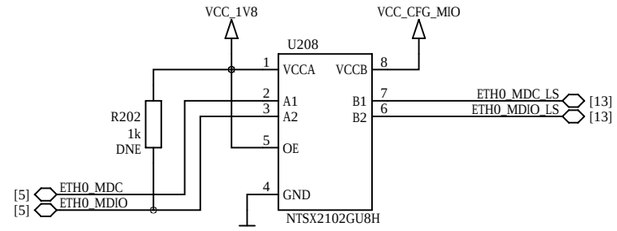

Miscellaneous

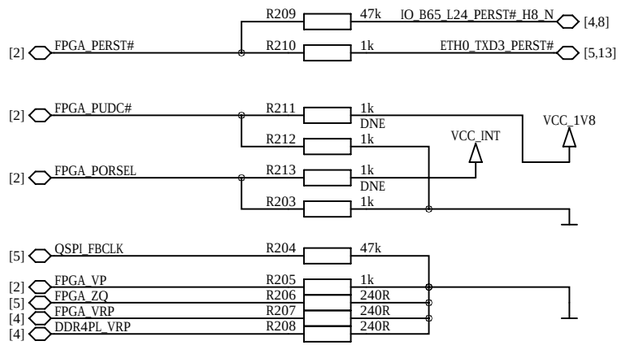

PCIe Reset

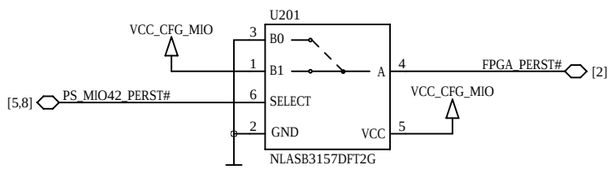

Reset Level Shifter

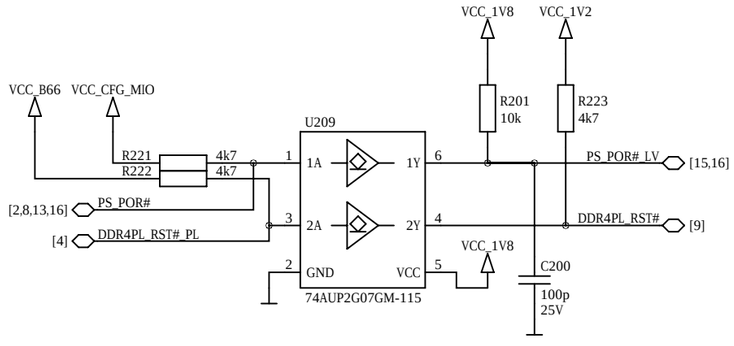

Boot Modes

	Boot Mode		Mode Straps	Configuration	
	1	0	PS_MODE	PL Boot	PS Boot
eMMC Mode	0	0	0110	PS	eMMC
SD Mode LS (not supported)	0	1	1110	PS	SDIO (with level shifter)
QSPI Mode	1	0	0010	PS	QSPI
SD Mode (default)	1	1	0101	PS	SDIO

SD Mode LS mode may be supported in the future.
SD Mode LS requires VCC_CFG_MIO of 1.8V.

FPGA Configuration

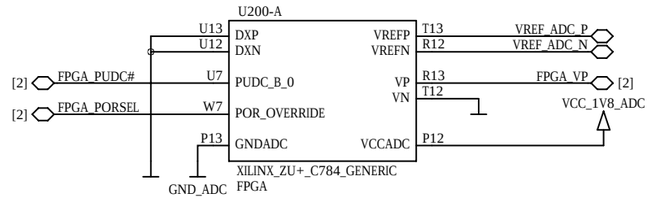

FPGA PS Configuration

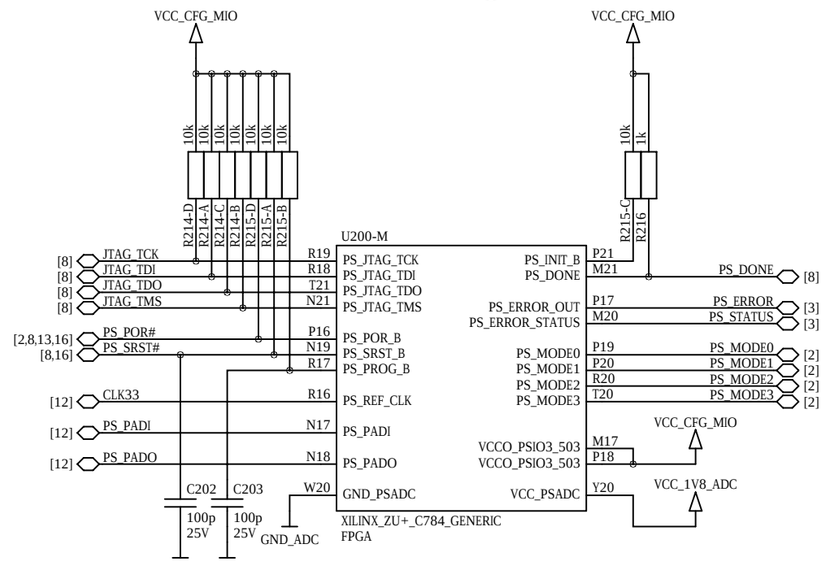

FPGA HD Bank 25 (ZU2/3) or 45 (ZU4/5)

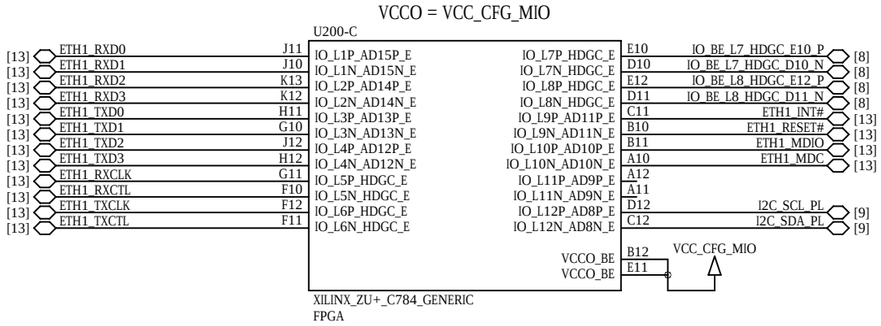

FPGA HD Bank 26 (ZU2/3) or 46 (ZU4/5)

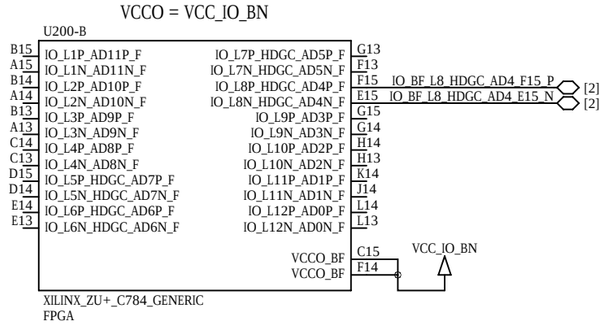

FPGA HD Bank 24 (ZU2/3) or 44 (ZU4/5)

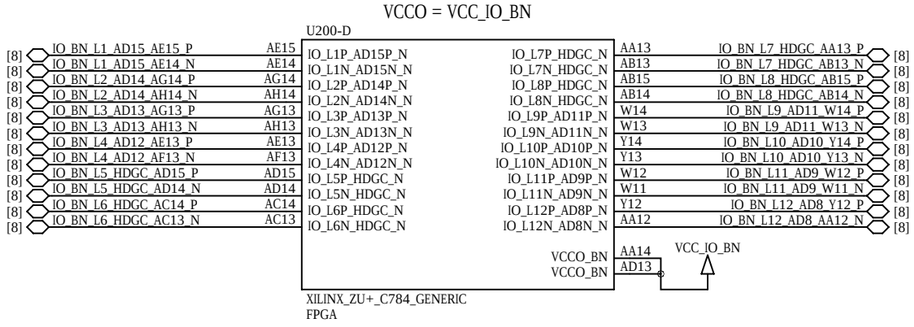

FPGA HD Bank 44 (ZU2/3) or 43 (ZU4/5)

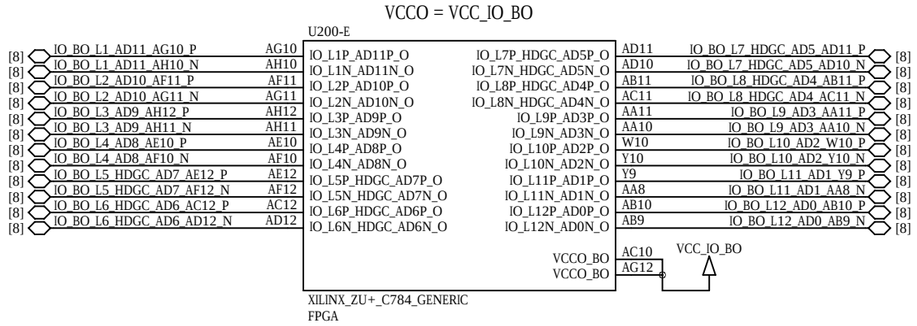

FPGA Reference Voltages

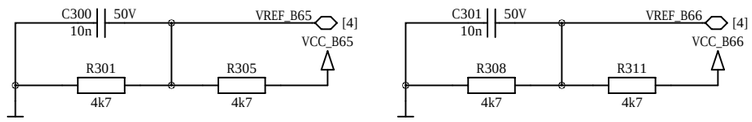

User LEDs

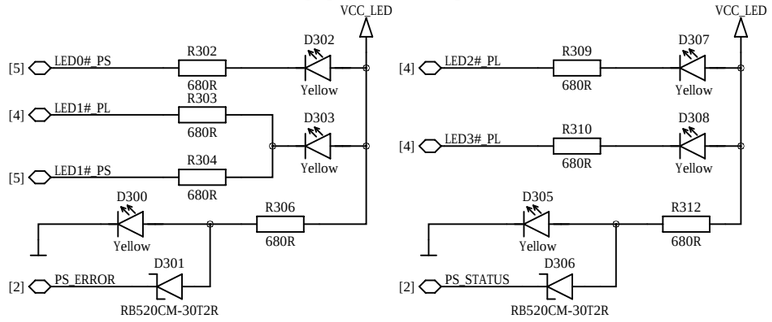

LED Power

not included in user schematics

This part is intentionally left blank.

FPGA HP Bank 64

VCCO = VCC_1V2

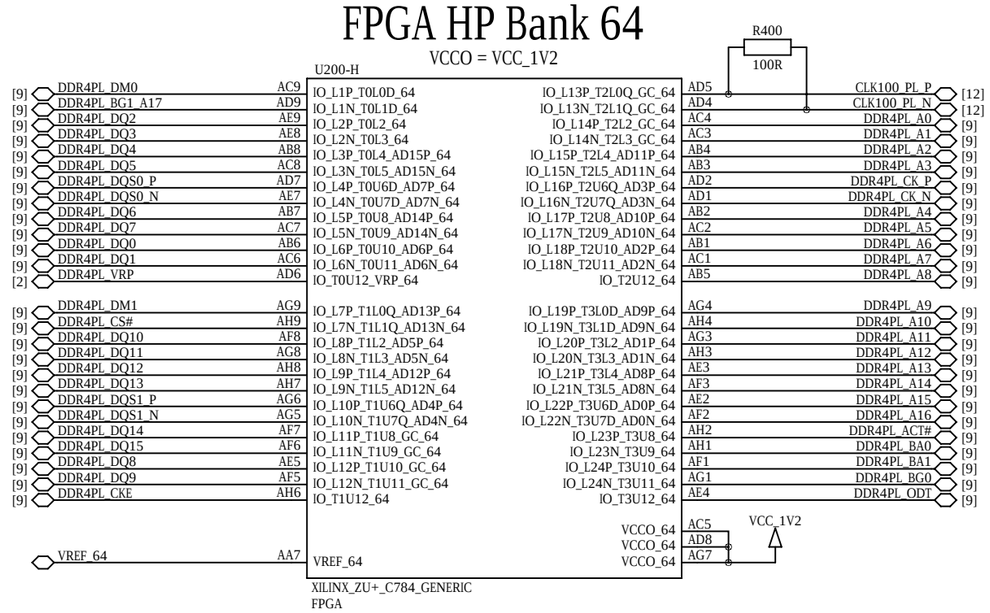

FPGA HP Bank 66

VCCO = VCC_IO_B66 (max 1.8V)

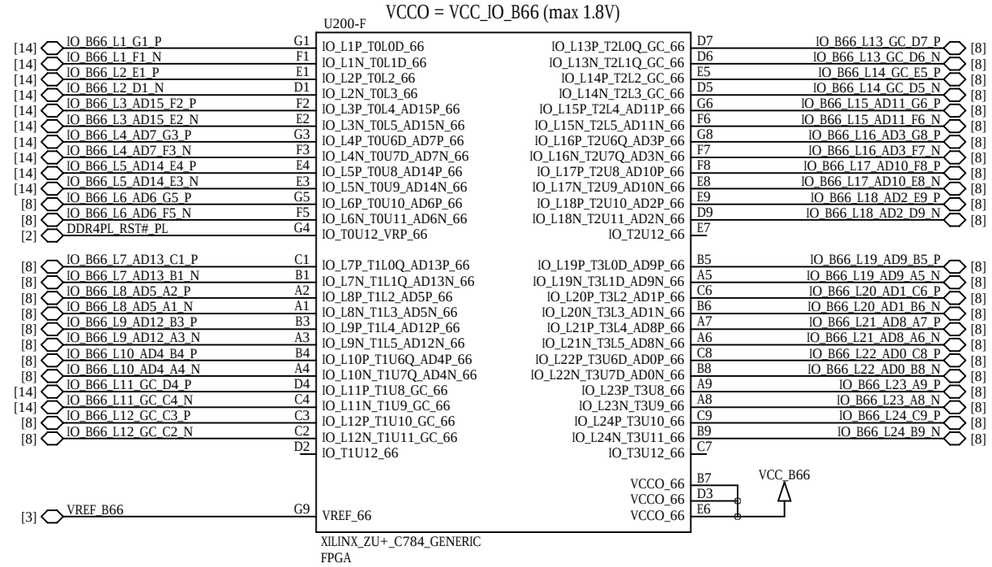

FPGA HP Bank 65

VCCO = VCC_IO_B65 (max 1.8V)

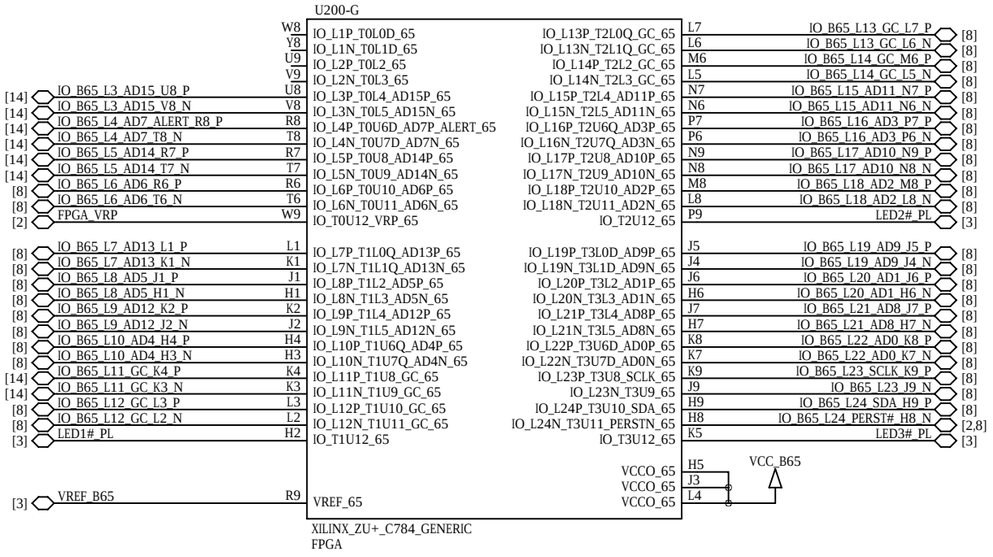

FPGA MGT Bank 224

only available in ZU4EV and ZU5EV devices

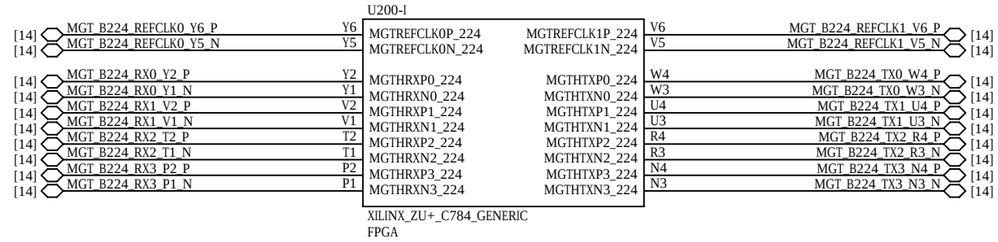

FPGA PS GTR Bank 505

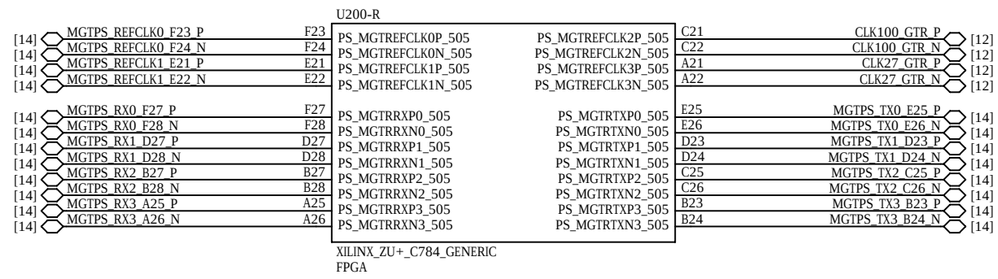

FPGA PS DDR Bank 504

VCCO = VCC_1V2

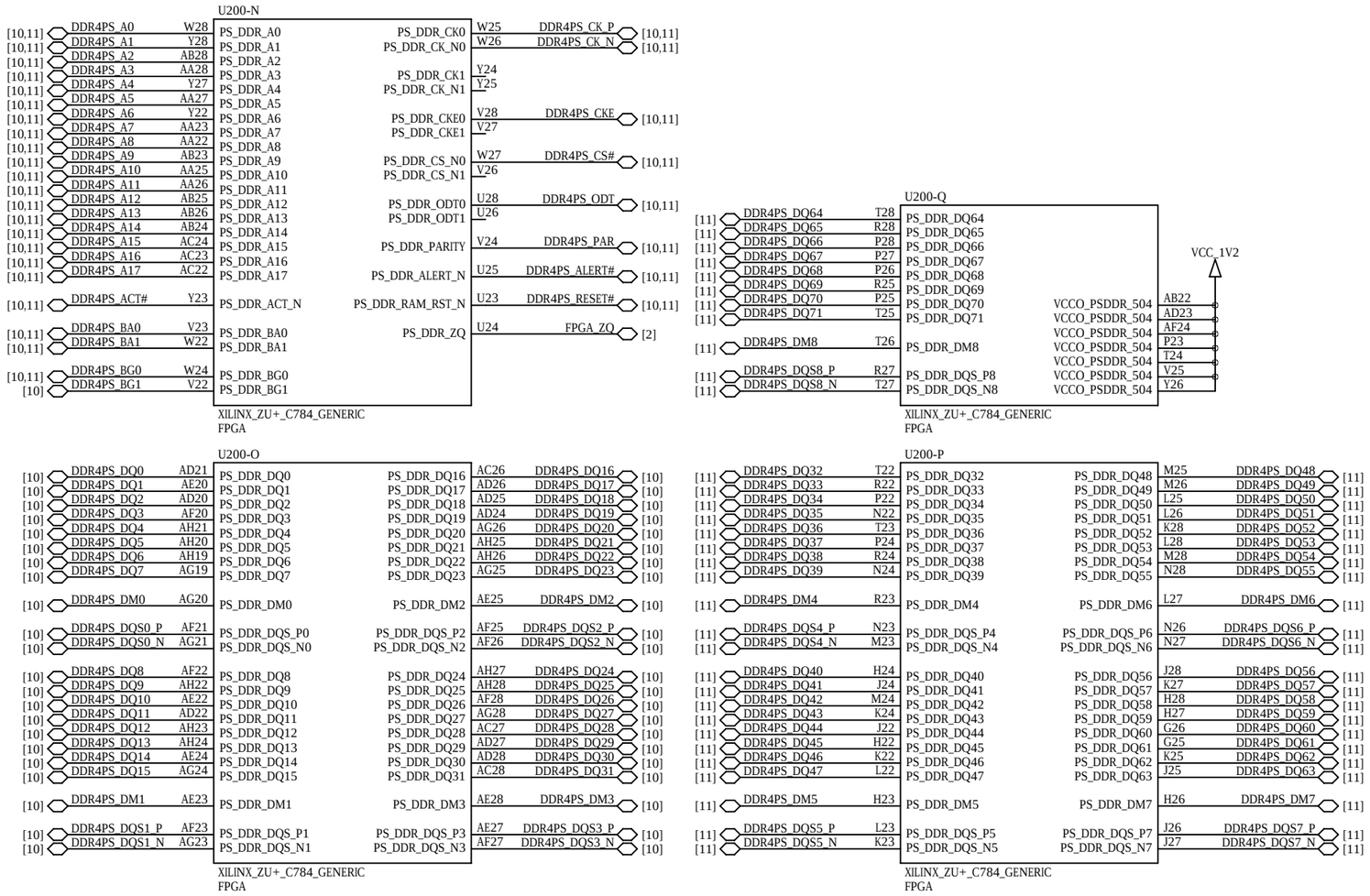

FPGA PS Bank 500

VCCO = VCC_1V8

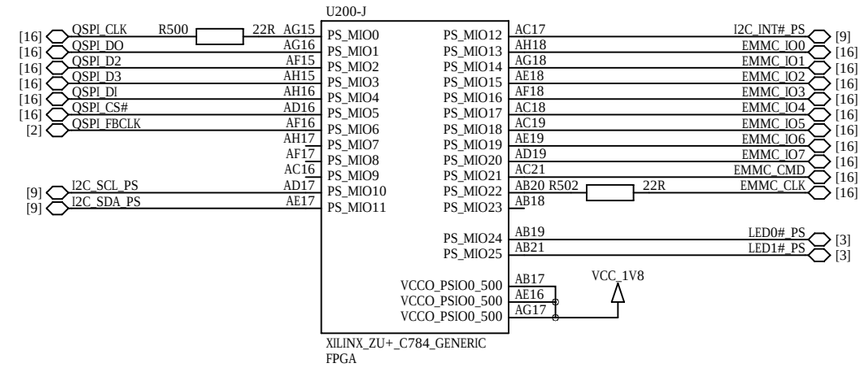

FPGA PS Bank 501

VCCO = VCC_CFG_MIO

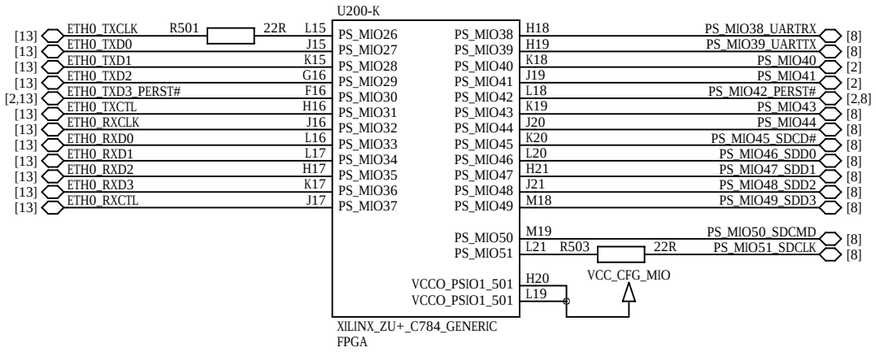

FPGA PS Bank 502

VCCO = VCC_1V8

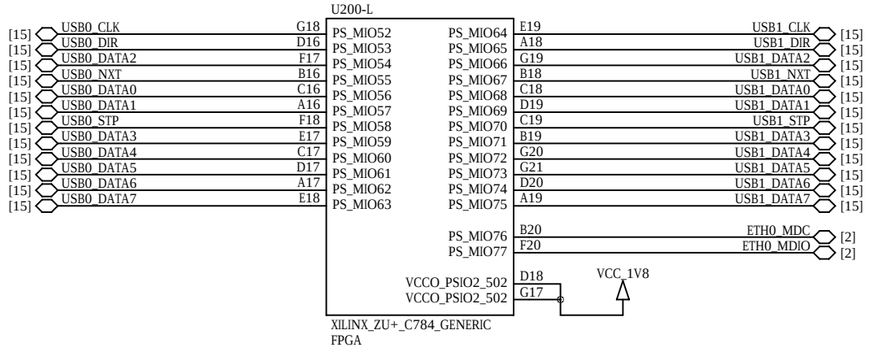

ENCLUSTRA	Copyright © 2024 by Enclustra GmbH	Sheet Name 05_FPGA_PS_BANKS	Customer No 0000	Revision R1.3	DNE = do not equip	Confidential	
	Company Enclustra FPGA Solution Center	Project Mercury XU5	Project No 445	Designed MHEI	Date 21 Mar 2024	Sheet/sheets 5 / 28	

FPGA Ground

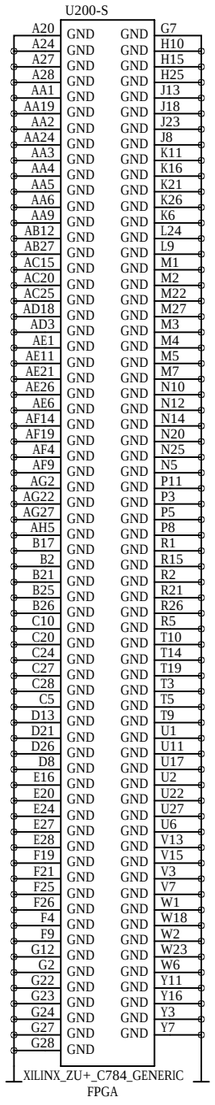

FPGA Power

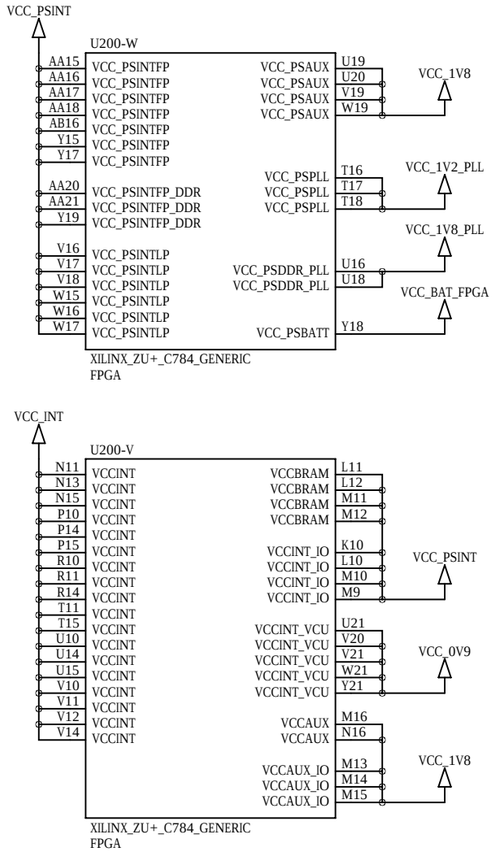

FPGA MGT Power

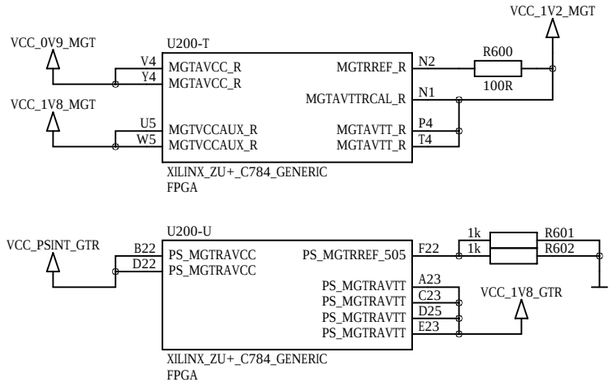

FPGA Battery Voltage

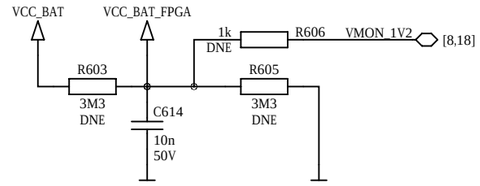

ADC Power

not included in user schematics

This part is intentionally left blank.

ADC Reference

optional

not included in user schematics

This part is intentionally left blank.

MGT Power Filters

not included in user schematics

This part is intentionally left blank.

PLL and GTR Power Filters

not included in user schematics

This part is intentionally left blank.

ENCLUSTRA	Copyright	© 2024 by Enclustra GmbH	Sheet Name	06_FPGA_POWER	Customer No	0000	Revision	R1.3	DNE = do not equip	Confidential
	Company	Enclustra FPGA Solution Center	Project	Mercury XU5	Project No	445	Designed	MHEI	Date 21 Mar 2024	Sheet/sheets 6 / 28

FPGA Decoupling

not included in user schematics

This part is intentionally left blank.

Power Decoupling

not included in user schematics

This part is intentionally left blank.

Module Connector A

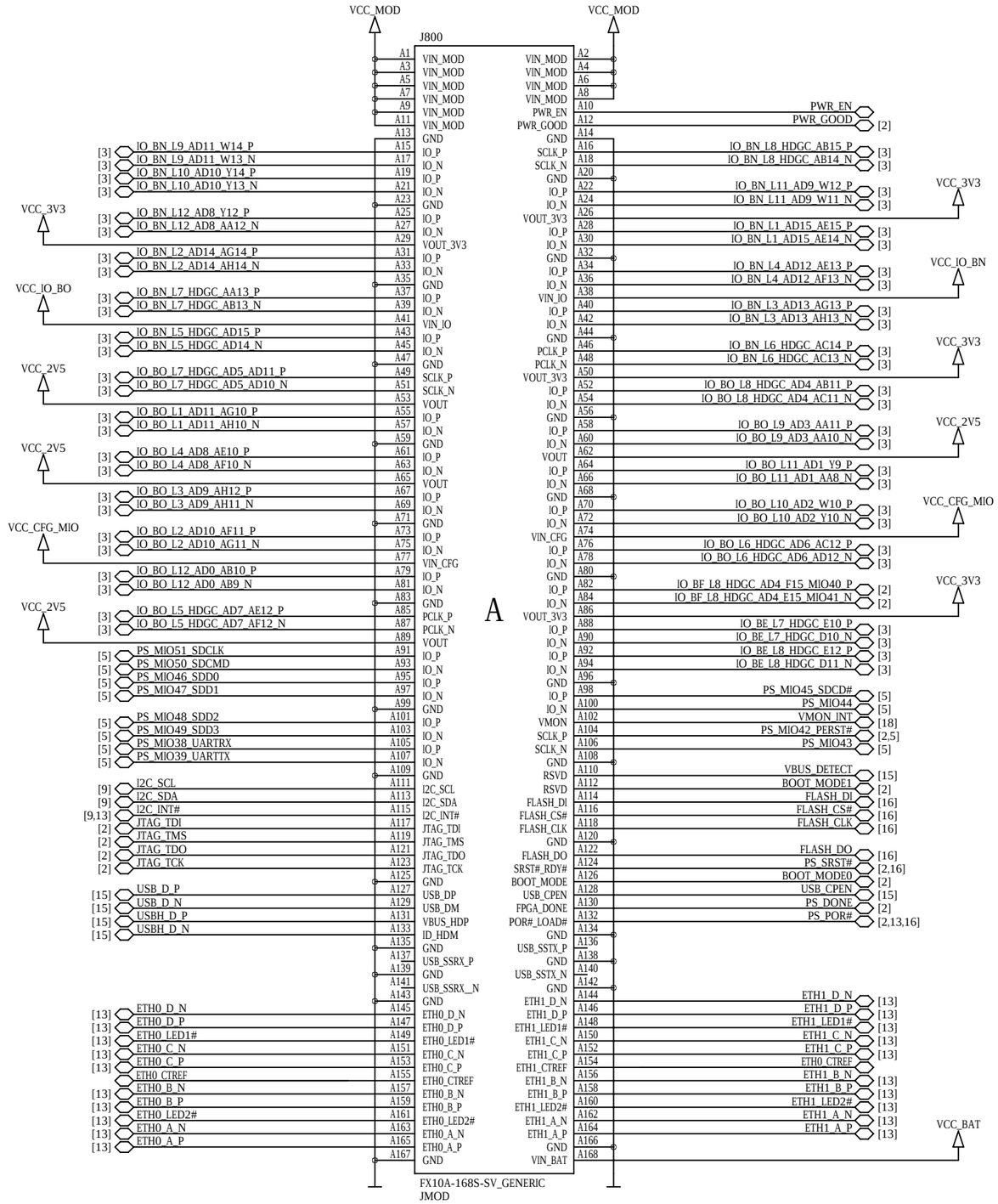

Module Connector B

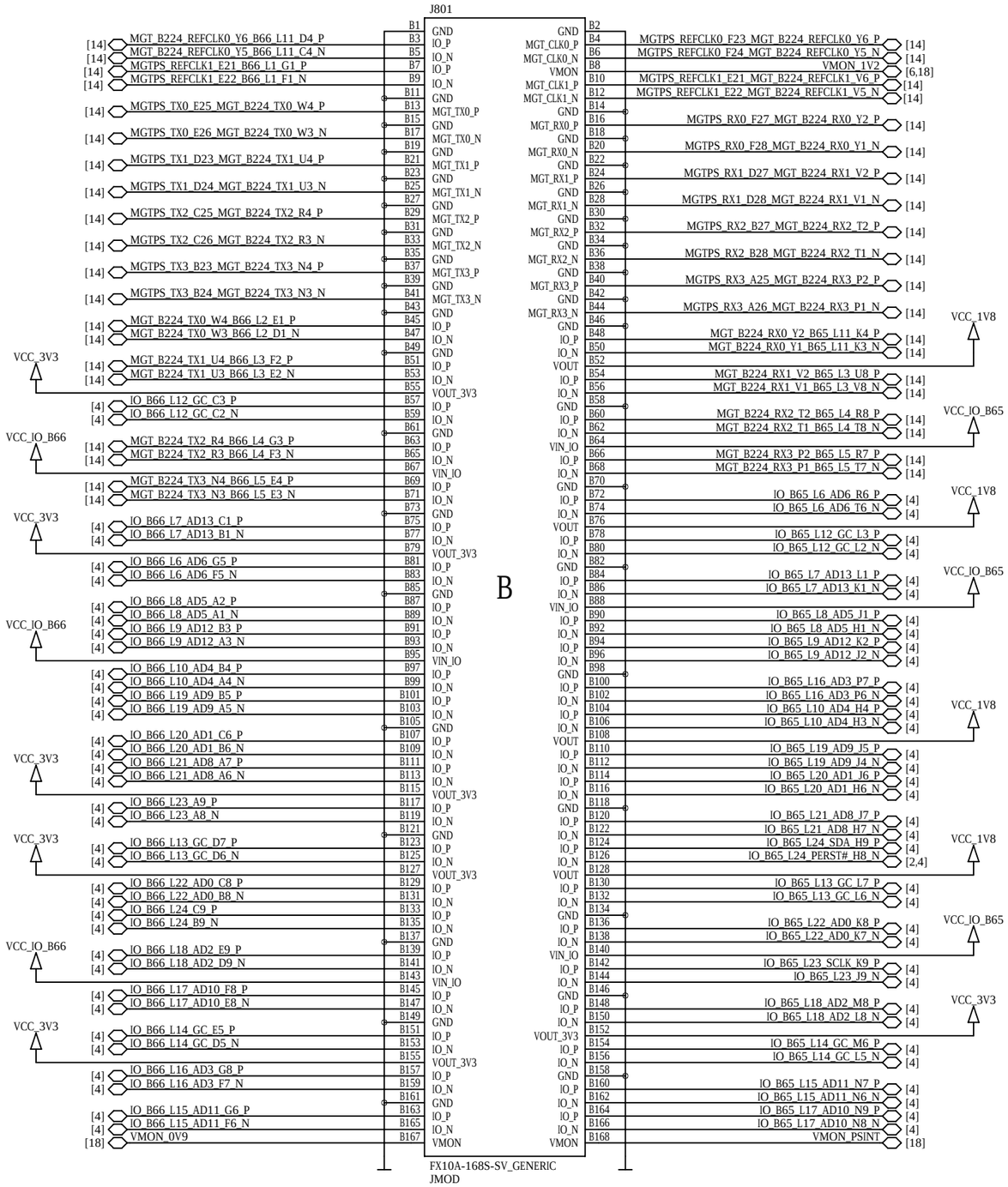

ENCLUSTRA	Copyright © 2024 by Enclustra GmbH	Sheet Name 08_MODULE_CONNECTORS_A_B	Customer No 0000	Revision R1.3	DNE = do not equip	Confidential	
	Company Enclustra FPGA Solution Center	Project Mercury XU5	Project No 445	Designed MHEI	Date 21 Mar 2024	Sheet/sheets 8 / 28	

PL DDR4 SDRAM

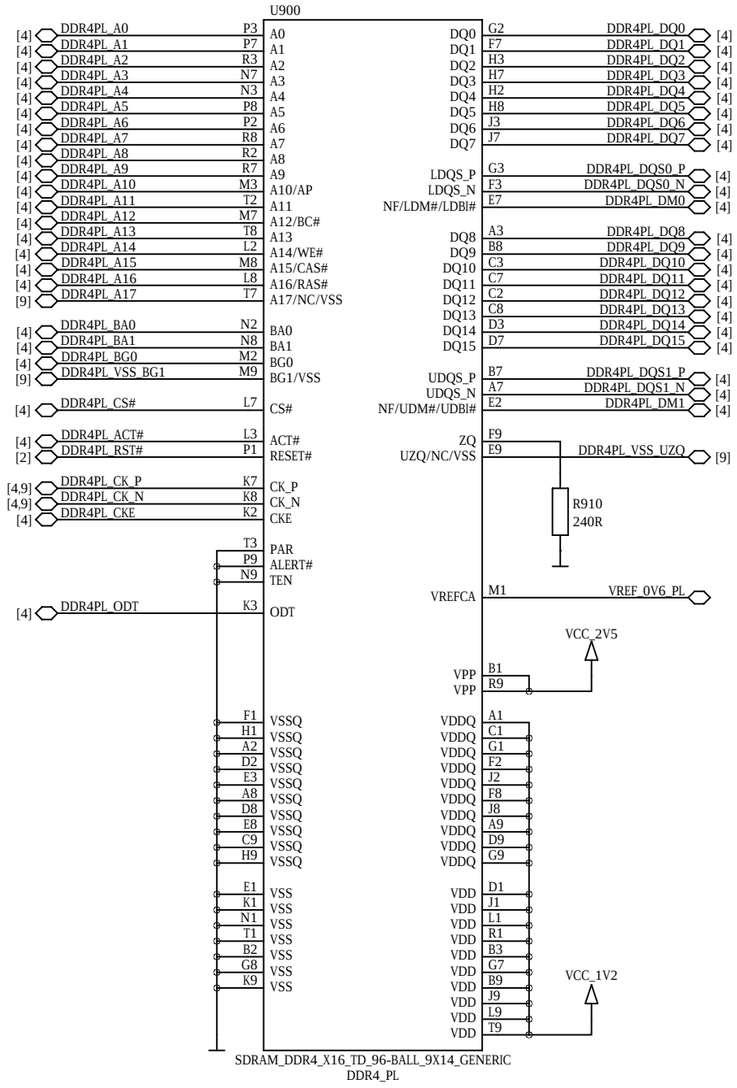

I2C Level Shifter

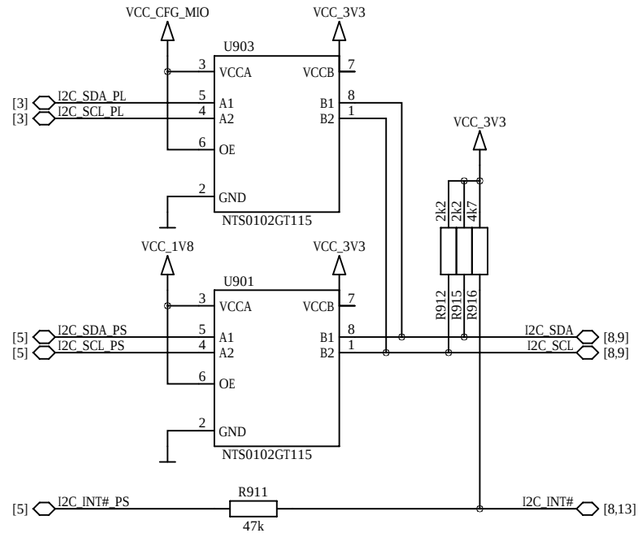

Secure EEPROM

for Enclustra use only

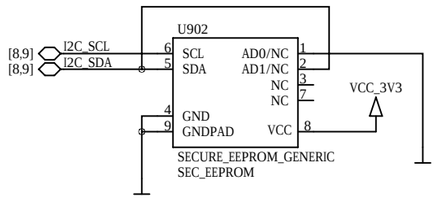

ATSHA204A-MAHDA-T I2C Address: 1 1 0 0 1 0 0 Rw
DS28CN01U-A00+ I2C Address: 1 0 1 1 1 0 0 Rw

PL DDR4 VREF & Decoupling

not included in user schematics

This part is intentionally left blank.

PL DDR4 Miscellaneous

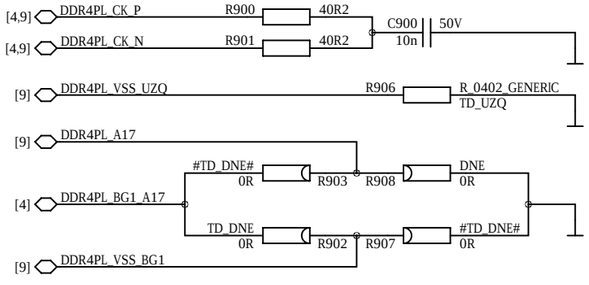

PS DDR4 SDRAM

Bytes 0-1

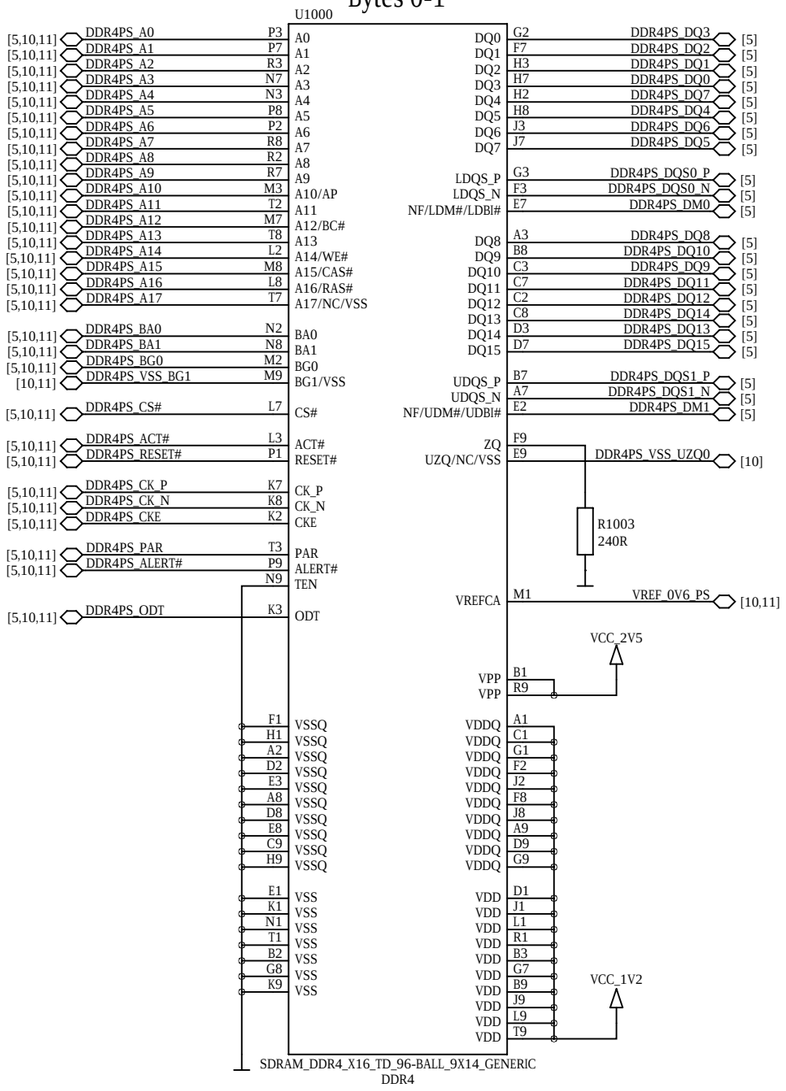

Bytes 2-3

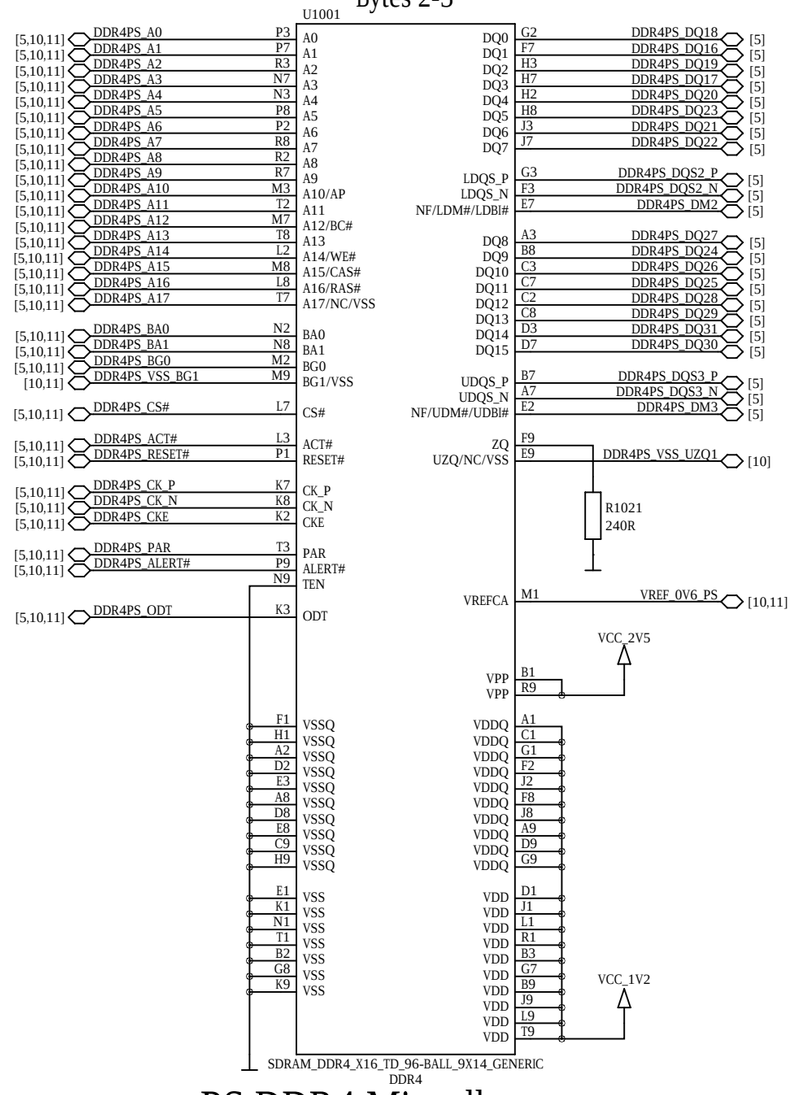

PS DDR4 Termination

not included in user schematics

This part is intentionally left blank.

PS DDR4 Miscellaneous

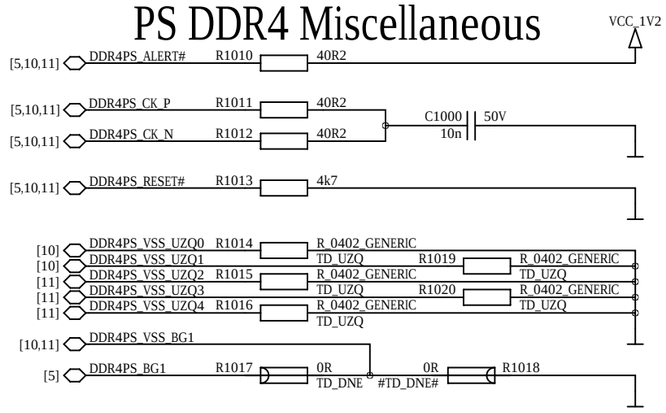

PS DDR4 SDRAM

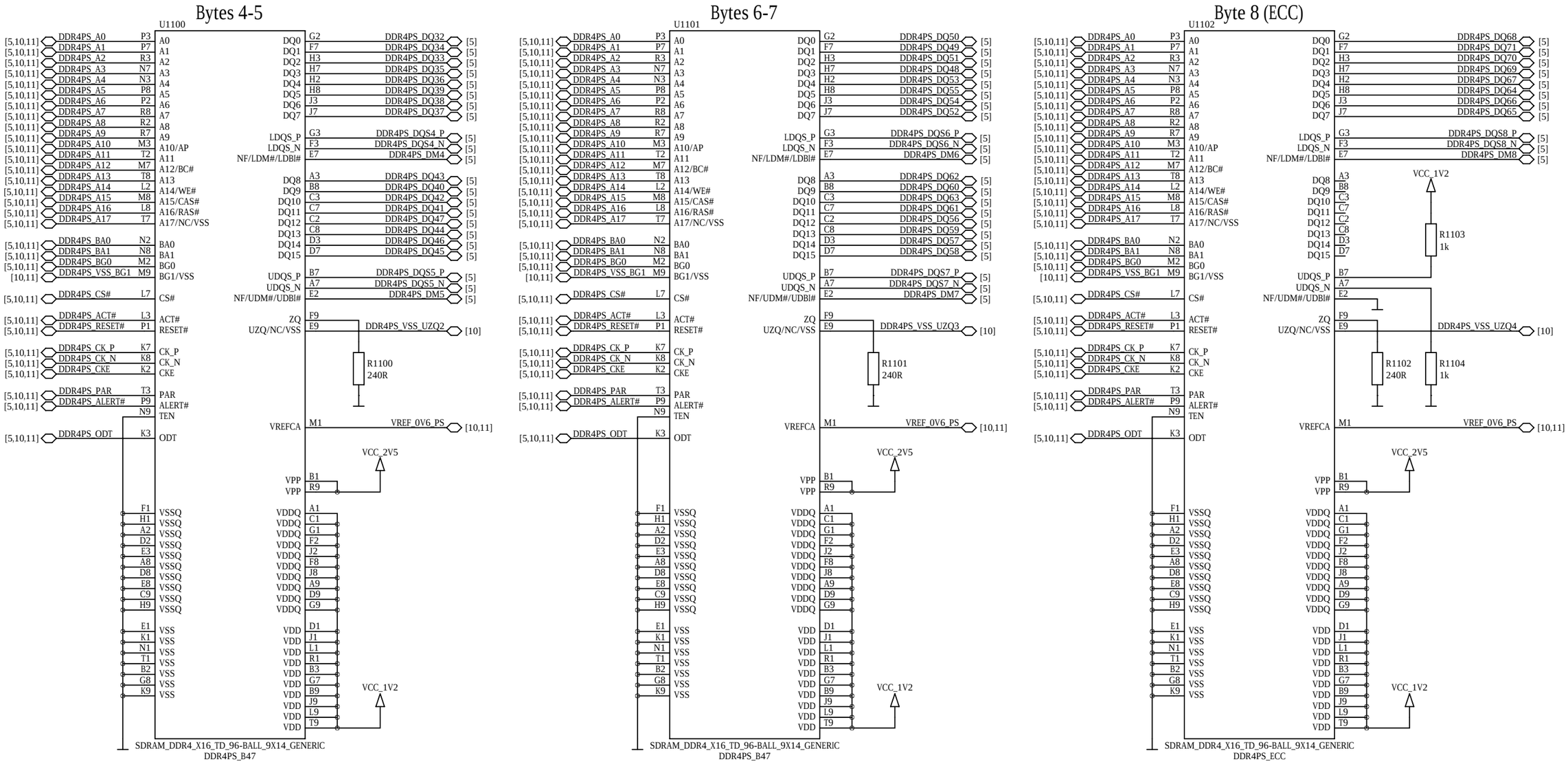

PS DDR4 Decoupling

not included in user schematics

This part is intentionally left blank.

PL 100 MHz Oscillator

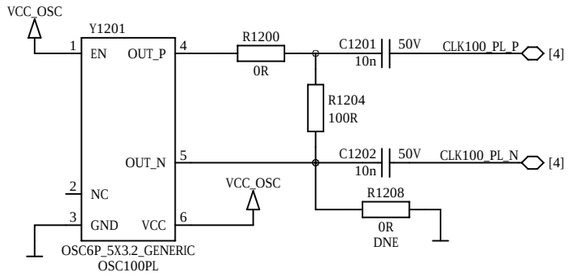

This part is intentionally left blank.

Oscillator Power Filters

not included in user schematics

This part is intentionally left blank.

GTR 100 MHz Oscillator

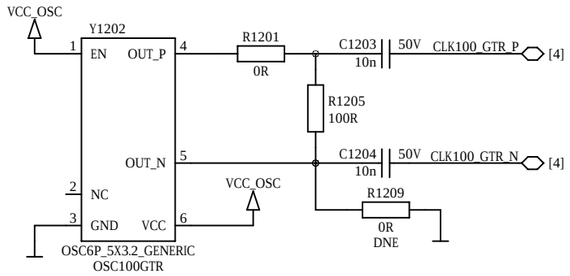

RTC Crystal

32.768 kHz

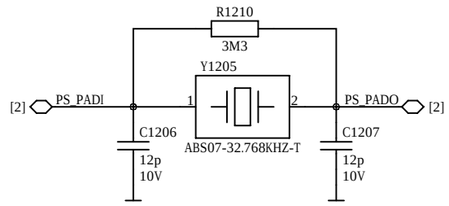

GTR 27 MHz Oscillator

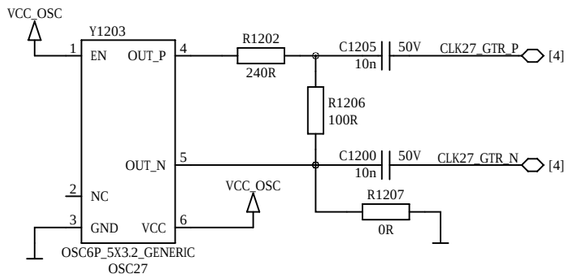

USB 24 MHz Oscillator

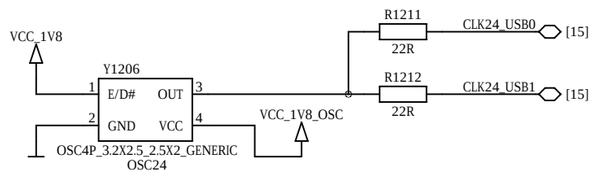

ETH 25 MHz Oscillator

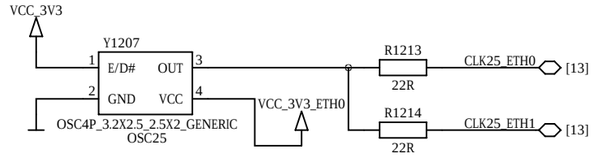

PS 33.3 MHz Oscillator

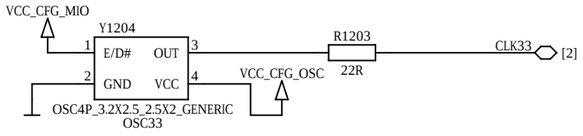

Gigabit Ethernet PHY 0 on PS

not available when using PS PCle with dedicated PERST# input

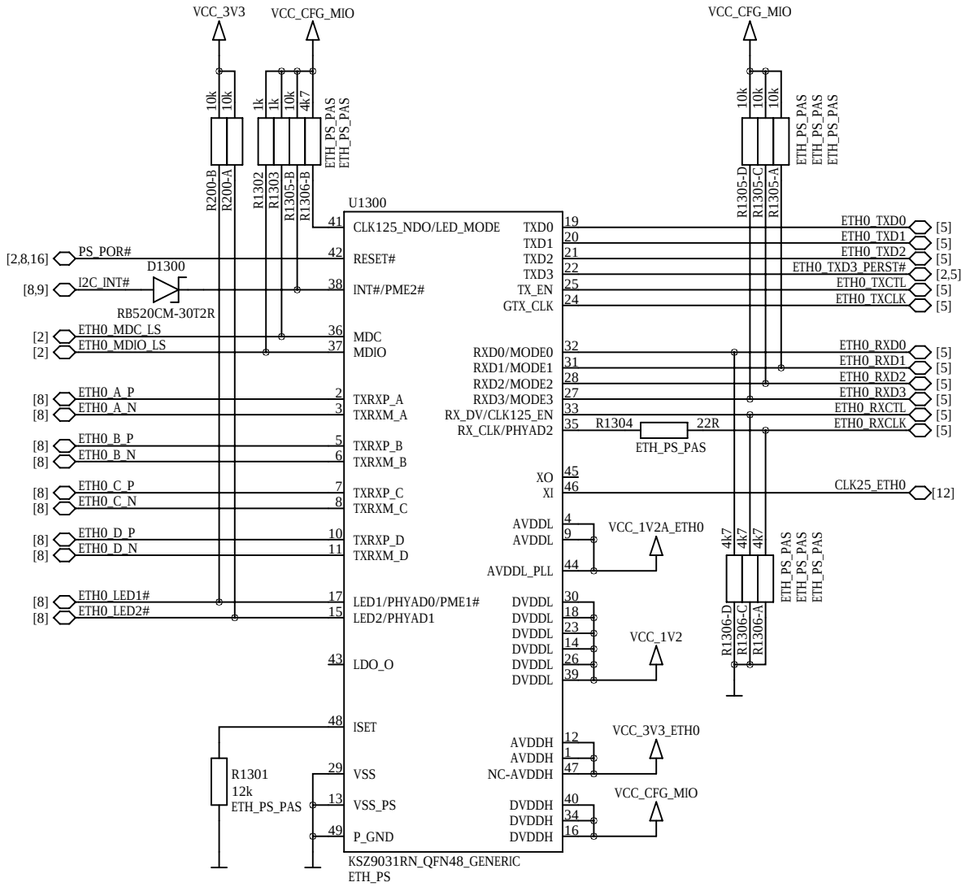

MODE<3:0> = 1110 -> RGMII, all capabilities
LED_Mode Pull up = Single LED
PhyAddress <2:0> = 011 -> 3
LED1 and LED2 are active low

Gigabit Ethernet PHY 1 on PL

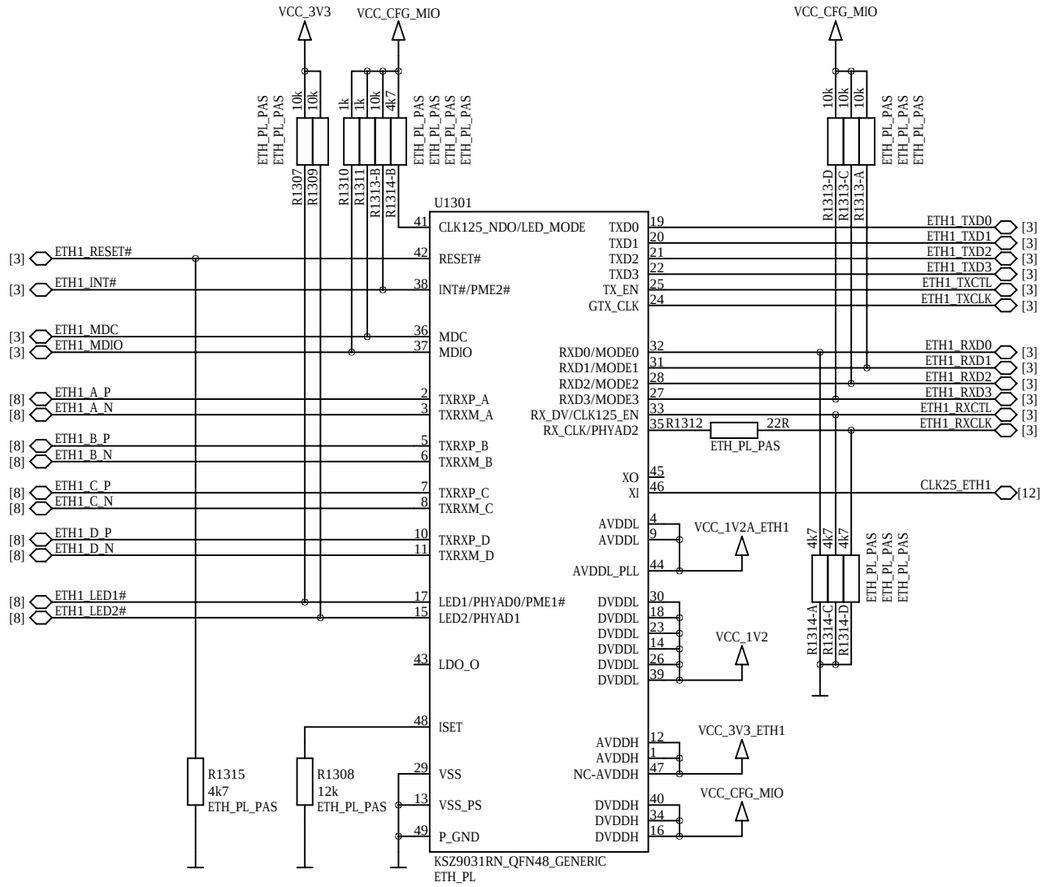

MODE<3:0> = 1110 -> RGMII, all capabilities
LED_Mode Pull up = Single LED
PhyAddress <2:0> = 011 -> 3
LED1 and LED2 are active low

Ethernet Power Filters

not included in user schematics

This part is intentionally left blank.

IO / MGT Selection

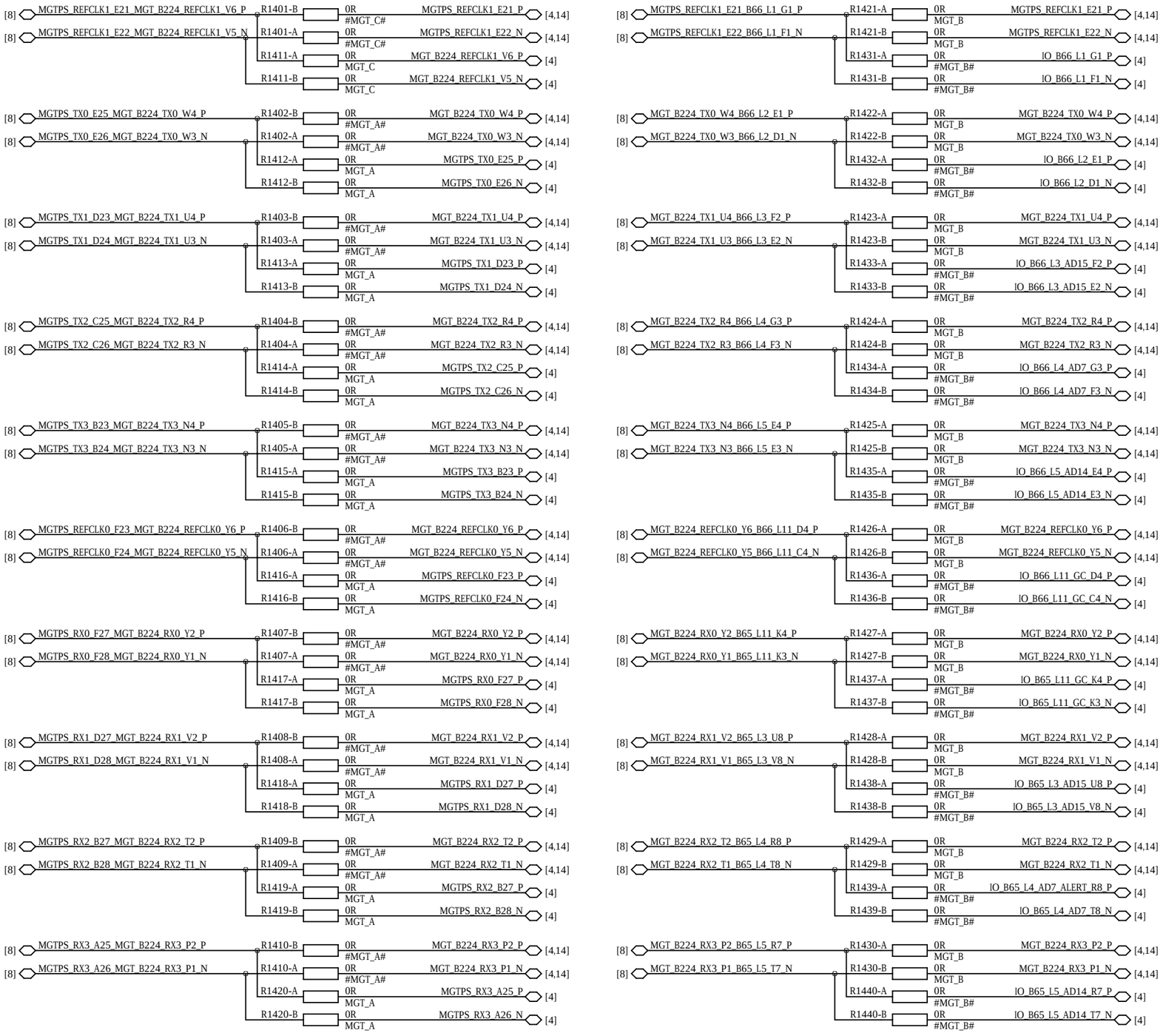

ENCLUSTRA	Copyright © 2024 by Enclustra GmbH	Sheet Name 14_IO_MGT_SELECTION	Customer No 0000	Revision R1.3	DNE = do not equip	Confidential
	Company Enclustra FPGA Solution Center	Project Mercury XU5	Project No 445	Designed MHEI	Date 21 Mar 2024	Sheet/sheets 14 / 28

USB 2.0 Device/Host PHY 0

A-Device ID=GND, B-Device ID=Float, Not Used ID=VDD33

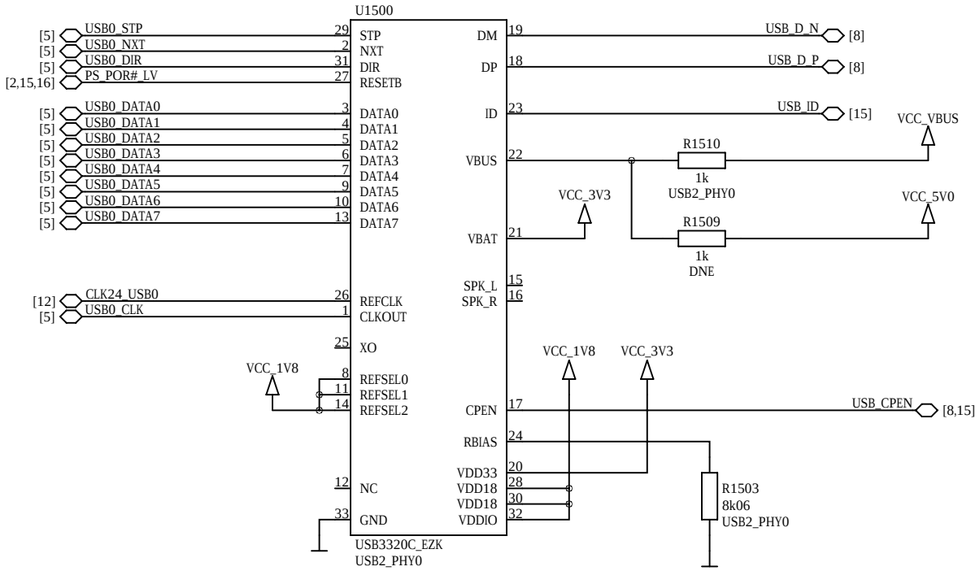

USB 2.0 Host PHY 1

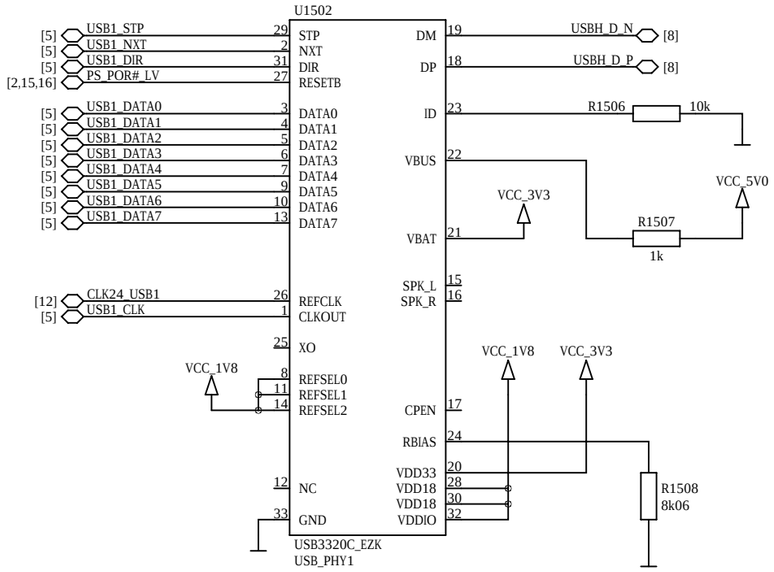

USB 2.0 Host/Device Mode

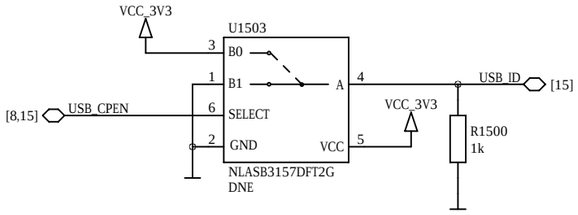

USB 2.0 VBUS Detect

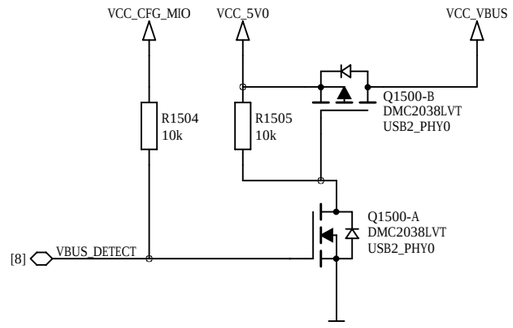

USB 2.0 Power Decoupling

not included in user schematics

This part is intentionally left blank.

ENCLUSTRA	Copyright © 2024 by Enclustra GmbH	Sheet Name 15_USB2_PHYS	Customer No 0000	Revision R1.3	DNE = do not equip	Confidential	
	Company Enclustra FPGA Solution Center	Project Mercury XU5	Project No 445	Designed MHEI	Date 21 Mar 2024	Sheet/sheets 15 / 28	

Quad SPI Flash

pin compatible with Micron N25Q512A11G1240F

Micron requires VCC_FLASH = 1.8V

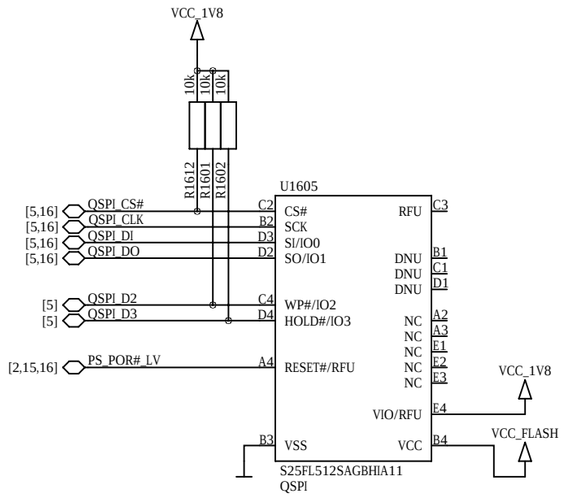

Flash Level Shifter

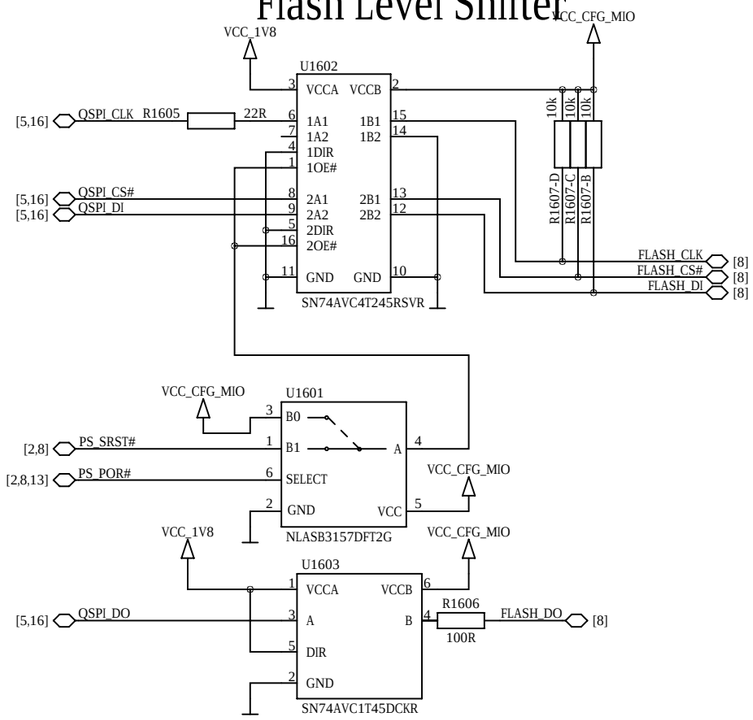

eMMC Flash

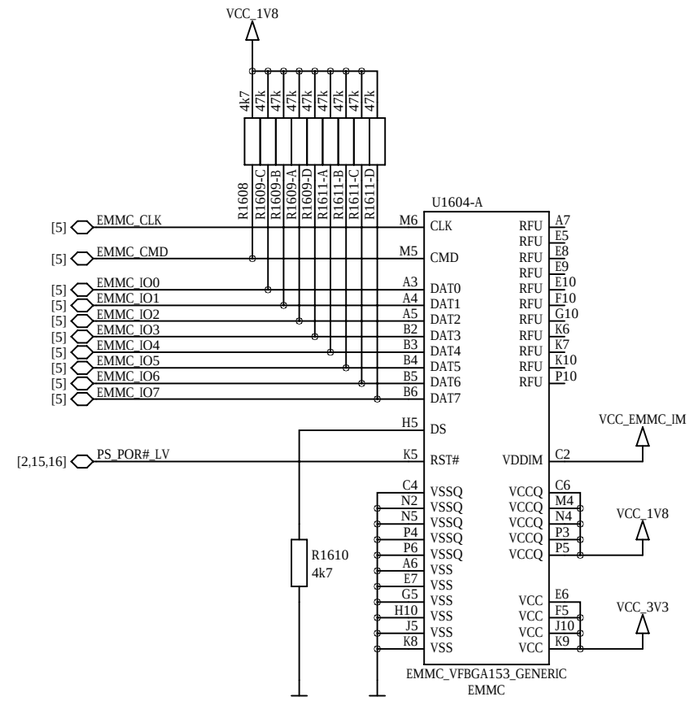

Quad SPI Power

not included in user schematics

This part is intentionally left blank.

eMMC Power

not included in user schematics

This part is intentionally left blank.

R1607-A
10k

ENCLUSTRA	Copyright © 2024 by Enclustra GmbH	Sheet Name 16_EMMC_QSPI_FLASH	Customer No 0000	Revision R1.3	DNE = do not equip	Confidential	
	Company Enclustra FPGA Solution Center	Project Mercury XU5	Project No 445	Designed MHEI	Date 21 Mar 2024	Sheet/sheets 16 / 28	

DC / DC Converter 3.3V 9A 5%

not included in user schematics

This part is intentionally left blank.

Supported Voltage Ranges

Power Rail	Direction	Range	Tolerance
VCC_MOD	input	5 - 15V	±5%
VCC_CFG_MIO	input	1.8 - 3.3V	±5%
VCC_IO_BN	input	1.2 - 3.3V	±5%
VCC_IO_BO	input	1.2 - 3.3V	±5%
VCC_IO_B65	input	1.0 - 1.8V	±5%
VCC_IO_B66	input	1.0 - 1.8V	±5%
VCC_BAT	input	2.7 - 3.6V *	-
VCC_1V8	output	1.8V	±5%
VCC_2V5	output	2.5V	±5%
VCC_3V3	output	3.3V	±5%

When using VCC_IO_BN, VCC_IO_BO at 3.3V, the tolerance is -5% +3%.

* Voltage range valid for LDO assembly option for VCC_BAT_FPGA (default assembly variant).

DC / DC Converter 0.72/0.85/0.9V 9A 3%

not included in user schematics

This part is intentionally left blank.

Input Power Filter

not included in user schematics

This part is intentionally left blank.

LDO 5.0V 0.15A

not included in user schematics

This part is intentionally left blank.

Buck Converter 1.2V 3A 3%

not included in user schematics

This part is intentionally left blank.

DDR4 Termination Voltage Regulator

not included in user schematics

This part is intentionally left blank.

Voltage Monitoring

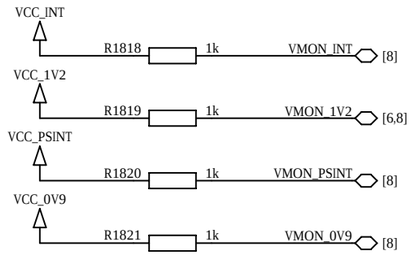

Buck Converter 0.85/0.9V 6A 3%

not included in user schematics

This part is intentionally left blank.

DDR4 VREF Generation

not included in user schematics

This part is intentionally left blank.

Dual DC/DC Converter

channel 2: 1.8V 2A 3%
channel 1: 0.9V 3.2A 3%
not included in user schematics

This part is intentionally left blank.

Buck Converter 2.5V 0.5A

not included in user schematics

This part is intentionally left blank.

LDO 1.2V 10 mA

not included in user schematics

This part is intentionally left blank.

FPGA I/O Over-Voltage Protection

not included in user schematics

This part is intentionally left blank.

Voltage Reference

not included in user schematics

This part is intentionally left blank.

R1907-D
4k7

ENCLUSTRA	Copyright	© 2024 by Enclustra GmbH	Sheet Name	19_POWER_1.8V_0.9V_2.5V	Customer No	0000	Revision	R1.3	DNE = do not equip	Confidential
	Company	Enclustra FPGA Solution Center	Project	Mercury XU5	Project No	445	Designed	MHEI	Date 21 Mar 2024	Sheet/sheets 19 / 28

Module Mounting Holes M3

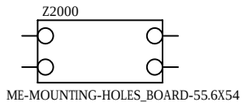

Fiducials

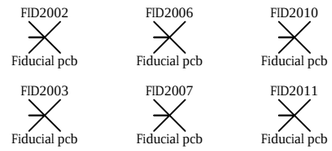

Panel Fiducials

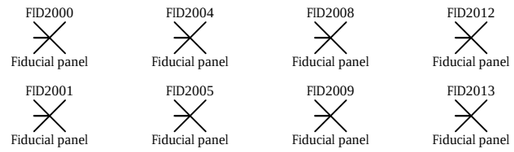

FPGA Heat Sink

optional

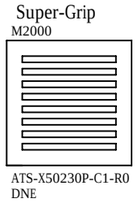

PCB / Logo / Text

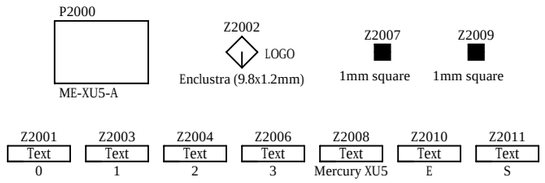

ENCLUSTRA	Copyright	© 2024 by Enclustra GmbH	Sheet Name	20_MECHANICS	Customer No 0000	Revision R1.3	DNE = do not equip	Confidential
	Company	Enclustra FPGA Solution Center	Project	Mercury XU5	Project No 445	Designed MHEI	Date 21 Mar 2024	Sheet/sheets 20 / 28

Component Options

FPGA	DDR4	DDR4PS_B47	DDR4PS_ECC	DDR4_PL	eMMC
Part U200A XCZU2CG-1SFVC784E EN102619	Part U1000A NDQ46PFP-8NIT EN103227	Part U1100A NDQ46PFP-8NIT EN103227	Part U1102A NDQ46PFP-8NIT EN103227	Part U900A NDQ46PFP-8NIT EN103227	Part U1604A H26M52208FPRI EN101865
Part U200B XCZU2EG-1SFVC784I EN101958	Part U1000B MT40A256M16GE-083E EN101632	Part U1100B MT40A256M16GE-083E EN101632	Part U1102B MT40A256M16GE-083E EN101632	Part U900B MT40A256M16GE-083E EN101632	Part U1604B EMMC16G-IB29-PZ90 EN102591
Part U200C XCZU3EG-2SFVC784I EN102020	Part U1000C AS4C512M16D4-75BIN EN104035	Part U1100C AS4C512M16D4-75BIN EN104035	Part U1102C AS4C512M16D4-75BIN EN104035	Part U900C AS4C512M16D4-75BIN EN104035	Part U1604C IMEM064GT25BM2D EN104001
Part U200D XCZU4EV-1SFVC784I EN102021	Part U1000D MT40A1G16KNR-075:E EN102109	Part U1100D MT40A1G16KNR-075:E EN102109	Part U1102D MT40A1G16KNR-075:E EN102109	Part U900D MT40A1G16KNR-075:E EN102109	Part U1604D FSEIASLD-64G EN104333
Part U200E XCZU5EV-2SFVC784I EN101987	Part U1000E K4AAG165WB-MCRC EN102970	Part U1100E K4AAG165WB-MCRC EN102970	Part U1102E K4AAG165WB-MCRC EN102970	Part U900E K4AAG165WB-MCRC EN102970	Part U1604E FEMDRW016G-88A43 EN104303
Part U200F XCZU2EG-1SFVC784I4524 EN104000	Part U1001A NDQ46PFP-8NIT EN103227	Part U1101A NDQ46PFP-8NIT EN103227			
Part U200G XCZU4CG-1SFVC784I4524 EN104546	Part U1001B MT40A256M16GE-083E EN101632	Part U1101B MT40A256M16GE-083E EN101632			
	Part U1001C AS4C512M16D4-75BIN EN104035	Part U1101C AS4C512M16D4-75BIN EN104035			
	Part U1001D MT40A1G16KNR-075:E EN102109	Part U1101D MT40A1G16KNR-075:E EN102109			
	Part U1001E K4AAG165WB-MCRC EN102970	Part U1101E K4AAG165WB-MCRC EN102970			

Component Assembly

Enclustra Product	FPGA	DDR4	DDR4PS_B47	DDR4PS_ECC	DDR4_PL	eMMC
Variant EN106119:0 ME-XU5-2CG-1E-D10H-R1.3	Option EN106119:1 FPGA EN102619	Option EN106119:2 DDR4 EN103227	Option EN106119:23 DDR4PS_B47 DNE	Option EN106119:24 DDR4PS_ECC DNE	Option EN106119:27 DDR4_PL EN103227	Option EN106119:3 EMMC EN104303
Variant EN106113:0 ME-XU5-2EG-1I-D11E-R1.3	Option EN106113:1 FPGA EN101958	Option EN106113:2 DDR4 EN103227	Option EN106113:23 DDR4PS_B47 EN103227	Option EN106113:24 DDR4PS_ECC EN103227	Option EN106113:27 DDR4_PL EN103227	Option EN106113:3 EMMC EN104303
Variant EN106114:0 ME-XU5-3EG-2I-D11E-R1.3	Option EN106114:1 FPGA EN102020	Option EN106114:2 DDR4 EN103227	Option EN106114:23 DDR4PS_B47 EN103227	Option EN106114:24 DDR4PS_ECC EN103227	Option EN106114:27 DDR4_PL EN103227	Option EN106114:3 EMMC EN104303
Variant EN106116:0 ME-XU5-4EV-1I-D11E-R1.3	Option EN106116:1 FPGA EN102021	Option EN106116:2 DDR4 EN103227	Option EN106116:23 DDR4PS_B47 EN103227	Option EN106116:24 DDR4PS_ECC EN103227	Option EN106116:27 DDR4_PL EN103227	Option EN106116:3 EMMC EN104303
Variant EN106118:0 ME-XU5-4EV-1I-D11E-G1-R1.3	Option EN106118:1 FPGA EN102021	Option EN106118:2 DDR4 EN103227	Option EN106118:23 DDR4PS_B47 EN103227	Option EN106118:24 DDR4PS_ECC EN103227	Option EN106118:27 DDR4_PL EN103227	Option EN106118:3 EMMC EN104303
Variant EN106093:0 ME-XU5-4EV-1I-D10EH-G1-X2-R1.3	Option EN106093:1 FPGA EN102021	Option EN106093:2 DDR4 EN103227	Option EN106093:23 DDR4PS_B47 DNE	Option EN106093:24 DDR4PS_ECC EN103227	Option EN106093:27 DDR4_PL DNE	Option EN106093:3 EMMC EN104303
Variant EN106094:0 ME-XU5-5EV-2I-D12E-R1.3	Option EN106094:1 FPGA EN101987	Option EN106094:2 DDR4 EN104035	Option EN106094:23 DDR4PS_B47 EN104035	Option EN106094:24 DDR4PS_ECC EN104035	Option EN106094:27 DDR4_PL EN104035	Option EN106094:3 EMMC EN104303
Variant EN106117:0 ME-XU5-5EV-2I-D12E-G1-R1.3	Option EN106117:1 FPGA EN101987	Option EN106117:2 DDR4 EN104035	Option EN106117:23 DDR4PS_B47 EN104035	Option EN106117:24 DDR4PS_ECC EN104035	Option EN106117:27 DDR4_PL EN104035	Option EN106117:3 EMMC EN104303
Variant EN106144:0 ME-XU5-4EV-1I-D12-R1.3	Option EN106144:1 FPGA EN102021	Option EN106144:2 DDR4 EN104035	Option EN106144:23 DDR4PS_B47 EN104035	Option EN106144:24 DDR4PS_ECC DNE	Option EN106144:27 DDR4_PL EN104035	Option EN106144:3 EMMC EN104303
Variant EN106141:0 ME-XU5-4EV-1I-D12-X1-R1.3	Option EN106141:1 FPGA EN102021	Option EN106141:2 DDR4 EN104035	Option EN106141:23 DDR4PS_B47 EN104035	Option EN106141:24 DDR4PS_ECC DNE	Option EN106141:27 DDR4_PL EN104035	Option EN106141:3 EMMC DNE
Variant EN106136:0 ME-XU5-2CG-1E-D10H-X1-R1.3	Option EN106136:1 FPGA EN102619	Option EN106136:2 DDR4 EN103227	Option EN106136:23 DDR4PS_B47 DNE	Option EN106136:24 DDR4PS_ECC DNE	Option EN106136:27 DDR4_PL DNE	Option EN106136:3 EMMC EN104333

Component Assembly

Enclustra Product	FPGA	DDR4	DDR4PS_B47	DDR4PS_ECC	DDR4_PL	eMMC
Variant EN106140:0 ME-XU5-2EG-1I4524-D11E-R1.3	Option EN106140:1 FPGA EN104000	Option EN106140:2 DDR4 EN103227	Option EN106140:23 DDR4PS_B47 EN103227	Option EN106140:24 DDR4PS_ECC EN103227	Option EN106140:27 DDR4_PL EN103227	Option EN106140:3 EMMC EN104303
Variant EN106137:0 ME-XU5-2CG-1E-D11E-E1-U1-NL-R1.3	Option EN106137:1 FPGA EN102619	Option EN106137:2 DDR4 EN103227	Option EN106137:23 DDR4PS_B47 EN103227	Option EN106137:24 DDR4PS_ECC EN103227	Option EN106137:27 DDR4_PL DNE	Option EN106137:3 EMMC EN104303
Variant EN106138:0 ME-XU5-2EG-1I-D11E-X1-R1.3	Option EN106138:1 FPGA EN101958	Option EN106138:2 DDR4 EN103227	Option EN106138:23 DDR4PS_B47 EN103227	Option EN106138:24 DDR4PS_ECC EN103227	Option EN106138:27 DDR4_PL DNE	Option EN106138:3 EMMC EN104303
Variant EN106139:0 ME-XU5-4CG-1I4524-D11E-G1-R1.3	Option EN106139:1 FPGA EN104546	Option EN106139:2 DDR4 EN103227	Option EN106139:23 DDR4PS_B47 EN103227	Option EN106139:24 DDR4PS_ECC EN103227	Option EN106139:27 DDR4_PL EN103227	Option EN106139:3 EMMC EN104303

Component Options

QSPI	MGT_A	MGT_B	MGT_C	Ethernet PHY PS	ETH_PS_PAS	Ethernet PHY PL	ETH_PL_PAS	ETH_PL_EQ	SEC_EEPROM
U1605 or DNE	R1402 - R1410 or R1412 - R1420	R218, R220, R1421 - R1430 or R217, R219, R1431 - R1440	R1401 or R1411	Part U1300A KSZ9031RNXIA EN101934 Part U1300B KSZ9031RNXIC EN104260	C1303-C1306, C1310 C1312-C1314, L1300 L1301, R1301, R1305 R1306 or DNE	Part U1301A KSZ9031RNXIA EN101934 Part U1301B KSZ9031RNXIC EN104260	R1307-R1315 or DNE	L1302, L1303 C1318-C1321 C1324-C1327 or DNE	Part U902A ATSHA204A-MAHDA-T EN100827 Part U902B DS28CN01U-A00+ EN100280

Component Assembly

QSPI	MGT_A	MGT_B	MGT_C	Ethernet PHY PS	ETH_PS_PAS	Ethernet PHY PL	ETH_PL_PAS	ETH_PL_EQ	SEC_EEPROM
Option EN106119:26 QSPI	Option EN106119:4 MGT_A	Option EN106119:5 MGT_B DNE	Option EN106119:6 MGT_C DNE	Option EN106119:7 ETH_PS EN101934	Option EN106119:33 ETH_PS_PAS	Option EN106119:25 ETH_PL EN101934	Option EN106119:31 ETH_PL_PAS	Option EN106119:34 ETH_PL_EQ	Option EN106119:8 SEC_EEPROM EN100827
Option EN106113:26 QSPI	Option EN106113:4 MGT_A	Option EN106113:5 MGT_B DNE	Option EN106113:6 MGT_C DNE	Option EN106113:7 ETH_PS EN101934	Option EN106113:33 ETH_PS_PAS	Option EN106113:25 ETH_PL EN101934	Option EN106113:31 ETH_PL_PAS	Option EN106113:34 ETH_PL_EQ	Option EN106113:8 SEC_EEPROM EN100827
Option EN106114:26 QSPI	Option EN106114:4 MGT_A	Option EN106114:5 MGT_B DNE	Option EN106114:6 MGT_C DNE	Option EN106114:7 ETH_PS EN101934	Option EN106114:33 ETH_PS_PAS	Option EN106114:25 ETH_PL EN101934	Option EN106114:31 ETH_PL_PAS	Option EN106114:34 ETH_PL_EQ	Option EN106114:8 SEC_EEPROM EN100827
Option EN106116:26 QSPI	Option EN106116:4 MGT_A	Option EN106116:5 MGT_B	Option EN106116:6 MGT_C	Option EN106116:7 ETH_PS EN101934	Option EN106116:33 ETH_PS_PAS	Option EN106116:25 ETH_PL EN101934	Option EN106116:31 ETH_PL_PAS	Option EN106116:34 ETH_PL_EQ	Option EN106116:8 SEC_EEPROM EN100827
Option EN106118:26 QSPI	Option EN106118:4 MGT_A DNE	Option EN106118:5 MGT_B DNE	Option EN106118:6 MGT_C	Option EN106118:7 ETH_PS EN101934	Option EN106118:33 ETH_PS_PAS	Option EN106118:25 ETH_PL EN101934	Option EN106118:31 ETH_PL_PAS	Option EN106118:34 ETH_PL_EQ	Option EN106118:8 SEC_EEPROM EN100827
Option EN106093:26 QSPI	Option EN106093:4 MGT_A DNE	Option EN106093:5 MGT_B DNE	Option EN106093:6 MGT_C	Option EN106093:7 ETH_PS EN101934	Option EN106093:33 ETH_PS_PAS	Option EN106093:25 ETH_PL DNE	Option EN106093:31 ETH_PL_PAS DNE	Option EN106093:34 ETH_PL_EQ DNE	Option EN106093:8 SEC_EEPROM EN100827
Option EN106094:26 QSPI	Option EN106094:4 MGT_A	Option EN106094:5 MGT_B	Option EN106094:6 MGT_C	Option EN106094:7 ETH_PS EN101934	Option EN106094:33 ETH_PS_PAS	Option EN106094:25 ETH_PL EN101934	Option EN106094:31 ETH_PL_PAS	Option EN106094:34 ETH_PL_EQ	Option EN106094:8 SEC_EEPROM EN100827
Option EN106117:26 QSPI	Option EN106117:4 MGT_A DNE	Option EN106117:5 MGT_B DNE	Option EN106117:6 MGT_C	Option EN106117:7 ETH_PS EN101934	Option EN106117:33 ETH_PS_PAS	Option EN106117:25 ETH_PL EN101934	Option EN106117:31 ETH_PL_PAS	Option EN106117:34 ETH_PL_EQ	Option EN106117:8 SEC_EEPROM EN100827
Option EN106144:26 QSPI	Option EN106144:4 MGT_A	Option EN106144:5 MGT_B	Option EN106144:6 MGT_C	Option EN106144:7 ETH_PS EN101934	Option EN106144:33 ETH_PS_PAS	Option EN106144:25 ETH_PL EN101934	Option EN106144:31 ETH_PL_PAS	Option EN106144:34 ETH_PL_EQ	Option EN106144:8 SEC_EEPROM EN100827
Option EN106141:26 QSPI DNE	Option EN106141:4 MGT_A	Option EN106141:5 MGT_B	Option EN106141:6 MGT_C	Option EN106141:7 ETH_PS DNE	Option EN106141:33 ETH_PS_PAS	Option EN106141:25 ETH_PL DNE	Option EN106141:31 ETH_PL_PAS	Option EN106141:34 ETH_PL_EQ	Option EN106141:8 SEC_EEPROM EN100827
Option EN106136:26 QSPI	Option EN106136:4 MGT_A	Option EN106136:5 MGT_B DNE	Option EN106136:6 MGT_C DNE	Option EN106136:7 ETH_PS EN101934	Option EN106136:33 ETH_PS_PAS	Option EN106136:25 ETH_PL EN101934	Option EN106136:31 ETH_PL_PAS	Option EN106136:34 ETH_PL_EQ	Option EN106136:8 SEC_EEPROM EN100827

Component Assembly

QSPI	MGT_A	MGT_B	MGT_C	Ethernet PHY PS	ETH_PS_PAS	Ethernet PHY PL	ETH_PL_PAS	ETH_PL_EQ	SEC_EEPROM
Option EN106140:26 QSPI	Option EN106140:4 MGT_A	Option EN106140:5 MGT_B DNE	Option EN106140:6 MGT_C DNE	Option EN106140:7 ETH_PS EN101934	Option EN106140:33 ETH_PS_PAS	Option EN106140:25 ETH_PL EN101934	Option EN106140:31 ETH_PL_PAS	Option EN106140:34 ETH_PL_EQ	Option EN106140:8 SEC_EEPROM EN100827
Option EN106137:26 QSPI	Option EN106137:4 MGT_A	Option EN106137:5 MGT_B DNE	Option EN106137:6 MGT_C DNE	Option EN106137:7 ETH_PS EN101934	Option EN106137:33 ETH_PS_PAS	Option EN106137:25 ETH_PL DNE	Option EN106137:31 ETH_PL_PAS	Option EN106137:34 ETH_PL_EQ	Option EN106137:8 SEC_EEPROM EN100827
Option EN106138:26 QSPI DNE	Option EN106138:4 MGT_A	Option EN106138:5 MGT_B DNE	Option EN106138:6 MGT_C DNE	Option EN106138:7 ETH_PS EN101934	Option EN106138:33 ETH_PS_PAS	Option EN106138:25 ETH_PL DNE	Option EN106138:31 ETH_PL_PAS DNE	Option EN106138:34 ETH_PL_EQ DNE	Option EN106138:8 SEC_EEPROM EN100827
Option EN106139:26 QSPI	Option EN106139:4 MGT_A DNE	Option EN106139:5 MGT_B DNE	Option EN106139:46 MGT_C	Option EN106139:7 ETH_PS EN101934	Option EN106139:33 ETH_PS_PAS	Option EN106139:25 ETH_PL EN101934	Option EN106139:31 ETH_PL_PAS	Option EN106139:34 ETH_PL_EQ	Option EN106139:8 SEC_EEPROM EN100827

Component Options

OSC25	OSC100PL	OSC100GTR	OSC27	OSC33	OSC24	L0U68	L1U	L1U_2520	L2U2_2520
Part Y1207A ASDMB-25.000MHZ-LC-T EN101588	Part Y1201A ASDMPLV-100.000MHZ-LR-T3 EN101610	Part Y1202A ASDMPLV-100.000MHZ-LR-T3 EN101610	Part Y1203A ASEMPC_27.000MHZ-LR-T EN101608	Part Y1204A ASEMB_33.333MHZ-LC-T EN100914	Part Y1206A ASDMB-24.000MHZ-LC-T EN101221	Part L1700A 0u68 EN100848	Part L1801A 1u EN104020	Part L1903A 1u0 EN101851	Part L1901A 2u2 EN101850
Part Y1207B ASEMB_25.000MHZ-LC-T EN101589	Part Y1201B ASFLMPLV-100.000MHZ-LR-T EN101611	Part Y1202B ASFLMPLV-100.000MHZ-LR-T EN101611	Part Y1203B ASEMPC-27.000MHZ-XR-T EN101609	Part Y1204B ASDMB_33.333MHZ-LC-T EN100285	Part Y1206B ASEMB_24.000MHZ-LC-T EN101187	Part L1700B 1u EN100436	Part L1801B 0u68 EN102445	Part L1903B 1u0 EN101811	Part L1901B 2u2 EN101849
Part Y1207C ASE-25.000MHZ-LC-T EN100287					Part Y1206C O_24.0-JO32-B-1V3-1-T1-LF EN104079	Part L1701A 0u68 EN100848			
Part Y1207D 831055678 EN104082					Part Y1206D ECS-3225MVQ-240-BP-TR EN104080	Part L1701B 1u EN100436			

Component Assembly

OSC25	OSC100PL	OSC100GTR	OSC27	OSC33	OSC24	L0U68	L1U	L1U_2520	L2U2_2520
Option EN106119:9 OSC25 EN100287	Option EN106119:10 OSC100PL EN101611	Option EN106119:11 OSC100GTR EN101611	Option EN106119:12 OSC27 EN101608	Option EN106119:13 OSC33 EN100914	Option EN106119:14 OSC24 EN104079	Option EN106119:15 L0U68 EN100848	Option EN106119:16 L1U EN104020	Option EN106119:17 L1U_2520 EN101811	Option EN106119:20 L2U2_2520 EN101850
Option EN106113:9 OSC25 EN100287	Option EN106113:10 OSC100PL EN101611	Option EN106113:11 OSC100GTR EN101611	Option EN106113:12 OSC27 EN101608	Option EN106113:13 OSC33 EN100914	Option EN106113:14 OSC24 EN104079	Option EN106113:15 L0U68 EN100848	Option EN106113:16 L1U EN104020	Option EN106113:17 L1U_2520 EN101811	Option EN106113:20 L2U2_2520 EN101850
Option EN106114:9 OSC25 EN100287	Option EN106114:10 OSC100PL EN101611	Option EN106114:11 OSC100GTR EN101611	Option EN106114:12 OSC27 EN101608	Option EN106114:13 OSC33 EN100914	Option EN106114:14 OSC24 EN104079	Option EN106114:15 L0U68 EN100848	Option EN106114:16 L1U EN104020	Option EN106114:17 L1U_2520 EN101811	Option EN106114:20 L2U2_2520 EN101850
Option EN106116:9 OSC25 EN100287	Option EN106116:10 OSC100PL EN101611	Option EN106116:11 OSC100GTR EN101611	Option EN106116:12 OSC27 EN101608	Option EN106116:13 OSC33 EN100914	Option EN106116:14 OSC24 EN104079	Option EN106116:15 L0U68 EN100848	Option EN106116:16 L1U EN104020	Option EN106116:17 L1U_2520 EN101811	Option EN106116:20 L2U2_2520 EN101850
Option EN106118:9 OSC25 EN100287	Option EN106118:10 OSC100PL EN101611	Option EN106118:11 OSC100GTR EN101611	Option EN106118:12 OSC27 EN101608	Option EN106118:13 OSC33 EN100914	Option EN106118:14 OSC24 EN104079	Option EN106118:15 L0U68 EN100848	Option EN106118:16 L1U EN104020	Option EN106118:17 L1U_2520 EN101811	Option EN106118:20 L2U2_2520 EN101850
Option EN106093:9 OSC25 EN100287	Option EN106093:10 OSC100PL EN101611	Option EN106093:11 OSC100GTR EN101611	Option EN106093:12 OSC27 EN101608	Option EN106093:13 OSC33 EN100914	Option EN106093:14 OSC24 EN104079	Option EN106093:15 L0U68 EN100848	Option EN106093:16 L1U EN104020	Option EN106093:17 L1U_2520 EN101811	Option EN106093:20 L2U2_2520 EN101850
Option EN106094:9 OSC25 EN100287	Option EN106094:10 OSC100PL EN101611	Option EN106094:11 OSC100GTR EN101611	Option EN106094:12 OSC27 EN101608	Option EN106094:13 OSC33 EN100914	Option EN106094:14 OSC24 EN104079	Option EN106094:15 L0U68 EN100848	Option EN106094:16 L1U EN104020	Option EN106094:17 L1U_2520 EN101811	Option EN106094:20 L2U2_2520 EN101850
Option EN106117:9 OSC25 EN100287	Option EN106117:10 OSC100PL EN101611	Option EN106117:11 OSC100GTR EN101611	Option EN106117:12 OSC27 EN101608	Option EN106117:13 OSC33 EN100914	Option EN106117:14 OSC24 EN104079	Option EN106117:15 L0U68 EN100848	Option EN106117:16 L1U EN104020	Option EN106117:17 L1U_2520 EN101811	Option EN106117:20 L2U2_2520 EN101850
Option EN106144:9 OSC25 EN100287	Option EN106144:10 OSC100PL EN101611	Option EN106144:11 OSC100GTR EN101611	Option EN106144:12 OSC27 EN101608	Option EN106144:13 OSC33 EN100914	Option EN106144:14 OSC24 EN104079	Option EN106144:15 L0U68 EN100848	Option EN106144:16 L1U EN104020	Option EN106144:17 L1U_2520 EN101811	Option EN106144:20 L2U2_2520 EN101850
Option EN106141:9 OSC25 EN100287	Option EN106141:10 OSC100PL EN101611	Option EN106141:11 OSC100GTR EN101611	Option EN106141:12 OSC27 EN101608	Option EN106141:13 OSC33 EN100914	Option EN106141:14 OSC24 EN104079	Option EN106141:15 L0U68 EN100848	Option EN106141:16 L1U EN104020	Option EN106141:17 L1U_2520 EN101811	Option EN106141:20 L2U2_2520 EN101850
Option EN106136:9 OSC25 EN100287	Option EN106136:10 OSC100PL EN101611	Option EN106136:11 OSC100GTR EN101611	Option EN106136:12 OSC27 EN101608	Option EN106136:13 OSC33 EN100914	Option EN106136:14 OSC24 EN104079	Option EN106136:15 L0U68 EN100848	Option EN106136:16 L1U EN104020	Option EN106136:17 L1U_2520 EN101811	Option EN106136:20 L2U2_2520 EN101850

Component Assembly

OSC25	OSC100PL	OSC100GTR	OSC27	OSC33	OSC24	L0U68	L1U	L1U_2520	L2U2_2520
Option EN106140:9 OSC25 EN100287	Option EN106140:10 OSC100PL EN101611	Option EN106140:11 OSC100GTR EN101611	Option EN106140:12 OSC27 EN101608	Option EN106140:13 OSC33 EN100914	Option EN106140:14 OSC24 EN104079	Option EN106140:15 L0U68 EN100848	Option EN106140:16 L1U EN104020	Option EN106140:17 L1U_2520 EN101811	Option EN106140:20 L2U2_2520 EN101850
Option EN106137:9 OSC25 EN100287	Option EN106137:10 OSC100PL EN101611	Option EN106137:11 OSC100GTR EN101611	Option EN106137:12 OSC27 EN101608	Option EN106137:13 OSC33 EN100914	Option EN106137:14 OSC24 EN104079	Option EN106137:15 L0U68 EN100848	Option EN106137:16 L1U EN104020	Option EN106137:17 L1U_2520 EN101811	Option EN106137:20 L2U2_2520 EN101850
Option EN106138:9 OSC25 EN100287	Option EN106138:10 OSC100PL EN101611	Option EN106138:11 OSC100GTR EN101611	Option EN106138:12 OSC27 EN101608	Option EN106138:13 OSC33 EN100914	Option EN106138:14 OSC24 EN104079	Option EN106138:15 L0U68 EN100848	Option EN106138:16 L1U EN104020	Option EN106138:17 L1U_2520 EN101811	Option EN106138:20 L2U2_2520 EN101850
Option EN106139:9 OSC25 EN100287	Option EN106139:10 OSC100PL EN101611	Option EN106139:11 OSC100GTR EN101611	Option EN106139:12 OSC27 EN101608	Option EN106139:13 OSC33 EN100914	Option EN106139:14 OSC24 EN104079	Option EN106139:15 L0U68 EN100848	Option EN106139:16 L1U EN104020	Option EN106139:17 L1U_2520 EN101811	Option EN106139:20 L2U2_2520 EN101850

Component Options

L0U68_5050	TD_UZQ	TD_DNE	L1U5_2520	JMOD	USB_PHY1	DDR4_PL_PAS	USB2_PHY0
Part L1800A 0u68 EN102167 Part L1800B 0u68 EN102168	Part R906A 0R EN101361 Part R906B 240R EN101382 Part R1014A 0R EN101361 Part R1014B 240R EN101382 Part R1015A 0R EN101361 Part R1015B 240R EN101382 Part R1016A 0R EN101361 Part R1016B 240R EN101382 Part R1019A 0R EN101361 Part R1019B 240R EN101382 Part R1020A 0R EN101361 Part R1020B 240R EN101382	PL DDR: R902 or R903, R907 PS DDR: R1004, R1017 or R1018	Part L1902A 1u EN106112	Part J800A FX10A-168S-SV EN100375 Part J800B FX10A-168S-SV(83) EN103313 Part J801A FX10A-168S-SV EN100375 Part J801B FX10A-168S-SV(83) EN103313	U1502 or DNE	C905-C908, R913, R914 or DNE	R1503, R1510 Q1500, U1500 or DNE

Component Assembly

L0U68_5050	TD_UZQ	TD_DNE	L1U5_2520	JMOD	USB_PHY1	DDR4_PL_PAS	USB2_PHY0
Option EN106119:21 L0U68_5050 EN102168	Option EN106119:18 TD_UZQ EN101361	Option EN106119:19 TD_DNE DNE	Option EN106119:22 L1U5_2520 EN106112	Option EN106119:28 JMOD EN100375	Option EN106119:29 USB_PHY1	Option EN106119:30 DDR4_PL_PAS	Option EN106119:32 USB2_PHY0
Option EN106113:21 L0U68_5050 EN102168	Option EN106113:18 TD_UZQ EN101361	Option EN106113:19 TD_DNE DNE	Option EN106113:22 L1U5_2520 EN106112	Option EN106113:28 JMOD EN100375	Option EN106113:29 USB_PHY1	Option EN106113:30 DDR4_PL_PAS	Option EN106113:32 USB2_PHY0
Option EN106114:21 L0U68_5050 EN102168	Option EN106114:18 TD_UZQ EN101361	Option EN106114:19 TD_DNE DNE	Option EN106114:22 L1U5_2520 EN106112	Option EN106114:28 JMOD EN100375	Option EN106114:29 USB_PHY1	Option EN106114:30 DDR4_PL_PAS	Option EN106114:32 USB2_PHY0
Option EN106116:21 L0U68_5050 EN102168	Option EN106116:18 TD_UZQ EN101361	Option EN106116:19 TD_DNE DNE	Option EN106116:22 L1U5_2520 EN106112	Option EN106116:28 JMOD EN100375	Option EN106116:29 USB_PHY1	Option EN106116:30 DDR4_PL_PAS	Option EN106116:32 USB2_PHY0
Option EN106118:21 L0U68_5050 EN102168	Option EN106118:18 TD_UZQ EN101361	Option EN106118:19 TD_DNE DNE	Option EN106118:22 L1U5_2520 EN106112	Option EN106118:28 JMOD EN100375	Option EN106118:29 USB_PHY1	Option EN106118:30 DDR4_PL_PAS	Option EN106118:32 USB2_PHY0
Option EN106093:21 L0U68_5050 EN102168	Option EN106093:18 TD_UZQ EN101361	Option EN106093:19 TD_DNE DNE	Option EN106093:22 L1U5_2520 EN106112	Option EN106093:28 JMOD EN100375	Option EN106093:29 USB_PHY1 DNE	Option EN106093:30 DDR4_PL_PAS DNE	Option EN106093:32 USB2_PHY0
Option EN106094:21 L0U68_5050 EN102168	Option EN106094:18 TD_UZQ EN101361	Option EN106094:19 TD_DNE DNE	Option EN106094:22 L1U5_2520 EN106112	Option EN106094:28 JMOD EN100375	Option EN106094:29 USB_PHY1	Option EN106094:30 DDR4_PL_PAS	Option EN106094:32 USB2_PHY0
Option EN106117:21 L0U68_5050 EN102168	Option EN106117:18 TD_UZQ EN101361	Option EN106117:19 TD_DNE DNE	Option EN106117:22 L1U5_2520 EN106112	Option EN106117:28 JMOD EN100375	Option EN106117:29 USB_PHY1	Option EN106117:30 DDR4_PL_PAS	Option EN106117:32 USB2_PHY0
Option EN106144:21 L0U68_5050 EN102168	Option EN106144:18 TD_UZQ EN101361	Option EN106144:19 TD_DNE DNE	Option EN106144:22 L1U5_2520 EN106112	Option EN106144:28 JMOD EN100375	Option EN106144:29 USB_PHY1	Option EN106144:30 DDR4_PL_PAS	Option EN106144:32 USB2_PHY0
Option EN106141:21 L0U68_5050 EN102168	Option EN106141:18 TD_UZQ EN101361	Option EN106141:19 TD_DNE DNE	Option EN106141:22 L1U5_2520 EN106112	Option EN106141:28 JMOD EN100375	Option EN106141:29 USB_PHY1	Option EN106141:30 DDR4_PL_PAS	Option EN106141:32 USB2_PHY0
Option EN106136:21 L0U68_5050 EN102168	Option EN106136:18 TD_UZQ EN101361	Option EN106136:19 TD_DNE DNE	Option EN106136:22 L1U5_2520 EN106112	Option EN106136:28 JMOD EN103313	Option EN106136:29 USB_PHY1	Option EN106136:30 DDR4_PL_PAS	Option EN106136:32 USB2_PHY0

Component Assembly

L0U68_5050	TD_UZQ	TD_DNE	L1U5_2520	JMOD	USB_PHY1	DDR4_PL_PAS	USB2_PHY0
Option EN106140:21 L0U68_5050 EN102168	Option EN106140:18 TD_UZQ EN101361	Option EN106140:19 TD_DNE DNE	Option EN106140:22 L1U5_2520 EN106112	Option EN106140:28 JMOD EN100375	Option EN106140:29 USB_PHY1	Option EN106140:30 DDR4_PL_PAS	Option EN106140:32 USB2_PHY0
Option EN106137:21 L0U68_5050 EN102168	Option EN106137:18 TD_UZQ EN101361	Option EN106137:19 TD_DNE DNE	Option EN106137:22 L1U5_2520 EN106112	Option EN106137:28 JMOD EN100375	Option EN106137:29 USB_PHY1 DNE	Option EN106137:30 DDR4_PL_PAS	Option EN106137:32 USB2_PHY0
Option EN106138:21 L0U68_5050 EN102168	Option EN106138:18 TD_UZQ EN101361	Option EN106138:19 TD_DNE DNE	Option EN106138:22 L1U5_2520 EN106112	Option EN106138:28 JMOD EN100375	Option EN106138:29 USB_PHY1	Option EN106138:30 DDR4_PL_PAS DNE	Option EN106138:32 USB2_PHY0 DNE
Option EN106139:21 L0U68_5050 EN102168	Option EN106139:18 TD_UZQ EN101361	Option EN106139:19 TD_DNE DNE	Option EN106139:22 L1U5_2520 EN106112	Option EN106139:28 JMOD EN100375	Option EN106139:29 USB_PHY1	Option EN106139:30 DDR4_PL_PAS	Option EN106139:32 USB2_PHY0