Enclustra User Schematic

Mercury+ XU6 Revision 2.0

Disclaimer

User schematics do not include proprietary Enclustra design elements, such as power supply circuits.
These circuits use optimized designs which are extremely compact and remain proprietary to Enclustra.
The user manual provides all necessary information to use the module and its interfaces.

User schematics are provided after purchase of Enclustra hardware, and may also be provided in certain cases before purchase, to assist in product evaluation.
No part of the schematics may be copied or modified without written permission from Enclustra.

Full schematics, including a full bill-of-materials, may be available through the purchase of a hardware licence for the product in question.
Please contact Enclustra Sales for more information.

Note: DNE = Do Not Equip (parts not equipped by default)

© 2023 by Enclustra FPGA Solutions

Mercury+ XU6 SoC Module

Revision 2.0

Sheet 01: Cover
Sheet 02: SoC FPGA Configuration
Sheet 03: SoC FPGA HD Banks | User LEDs
Sheet 04: SoC FPGA HP | MGT Banks
Sheet 05: SoC FPGA PS Banks
Sheet 06: SoC FPGA Power
Sheet 07: Power Decoupling
Sheet 08: Module Connectors A | B
Sheet 09: Module Connector C
Sheet 10: PS DDR4 SDRAM Bytes 0-3
Sheet 11: PS DDR4 SDRAM Bytes 4-8 (ECC)
Sheet 12: Oscillators
Sheet 13: Gigabit Ethernet PHY
Sheet 14: USB 2.0 PHYs
Sheet 15: eMMC | QSPI Flash | EEPROM
Sheet 16: Power 3.3V | 1.2V | INT | 5V | 0.85V
Sheet 17: Power PSINT | 0.9V | VTT | 1.5V | Sequencing
Sheet 18: Power 1.8V | 2.5V | V-Monitor | VREF
Sheet 19: Mechanics
Sheet 20: Component Assembly
Sheet 21: Component Assembly

Boot Mode Selection

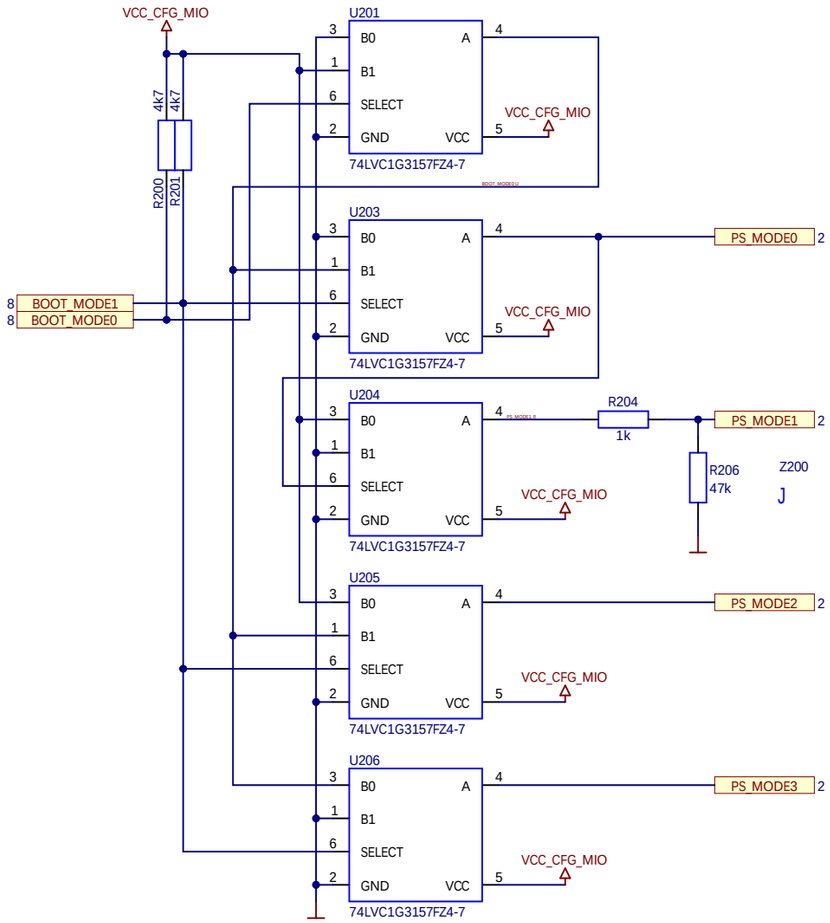

Miscellaneous

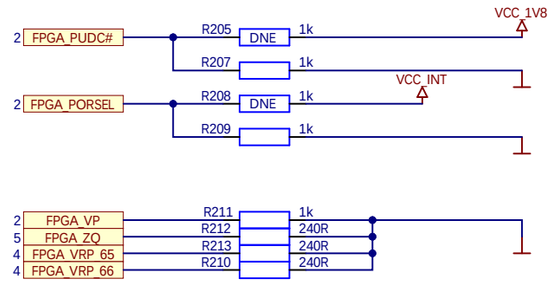

Boot Modes

	Boot Mode		Mode Straps	Configuration	
	1	0	PS_MODE	PL Boot	PS Boot
eMMC Mode	0	0	0110	PS	eMMC
SD Mode LS not supported	0	1	1110	PS	SDIO with level shifter
QSPI Mode	1	0	0010	PS	QSPI
SD Mode default	1	1	0101	PS	SDIO
JTAG Mode (*)	1	0	0000	PS	JTAG

SD Mode LS mode may be supported in the future. It requires VCC_CFG_MIO of 1.8V.

(*) Short-circuit R206 during boot while selecting QSPI mode to enable JTAG mode.

FPGA Configuration

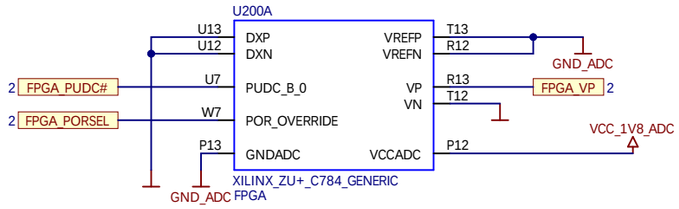

FPGA PS Configuration

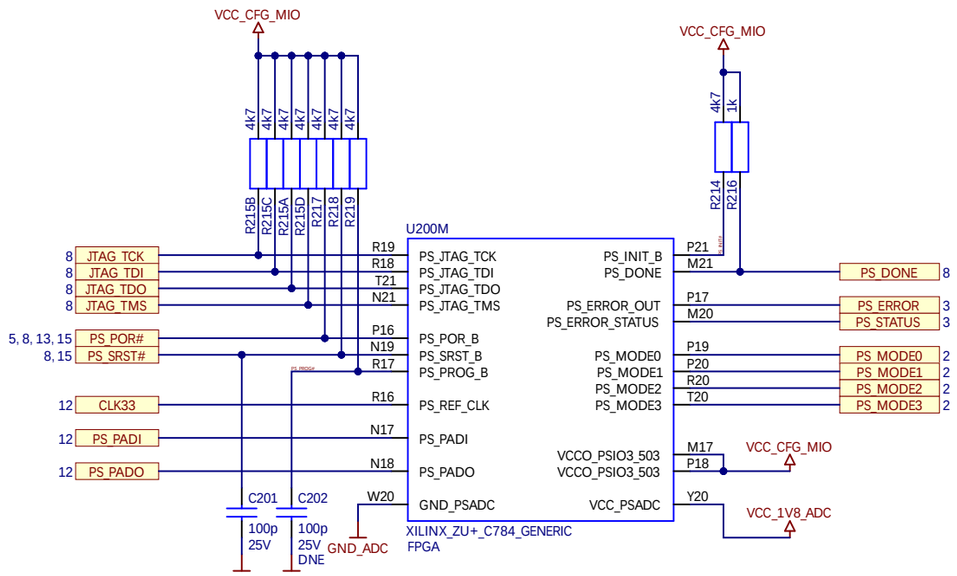

PCIe Reset

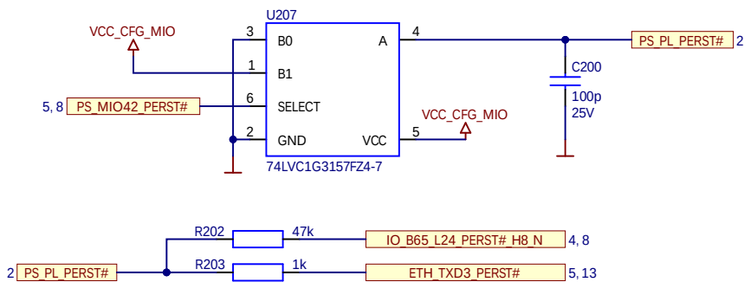

FPGA HD Bank 25 (ZU2/3) or 45 (ZU4/5)

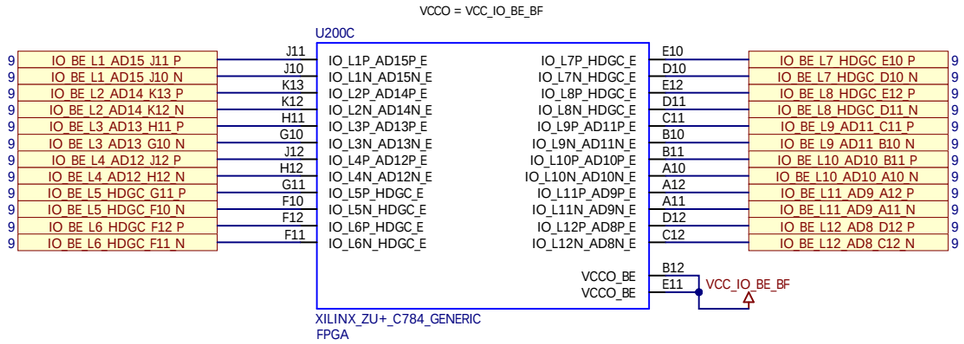

FPGA HD Bank 44 (ZU2/3) or 43 (ZU4/5)

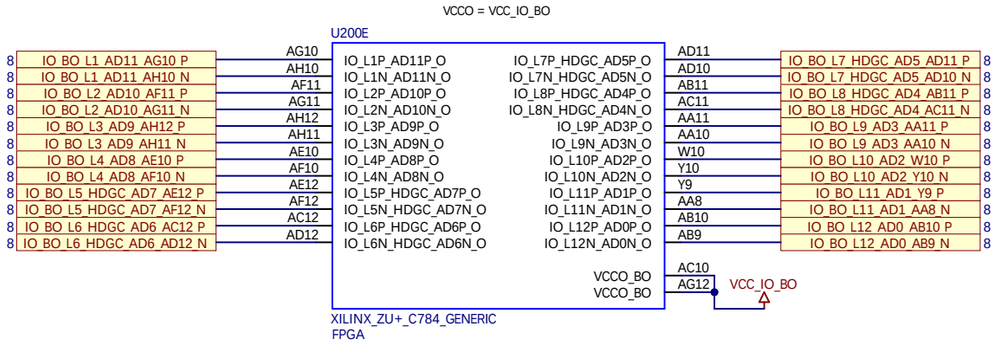

FPGA HD Bank 26 (ZU2/3) or 46 (ZU4/5)

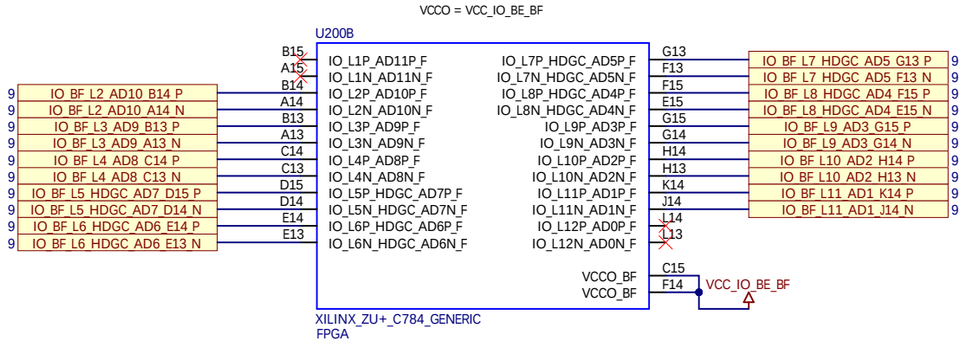

FPGA HD Bank 24 (ZU2/3) or 44 (ZU4/5)

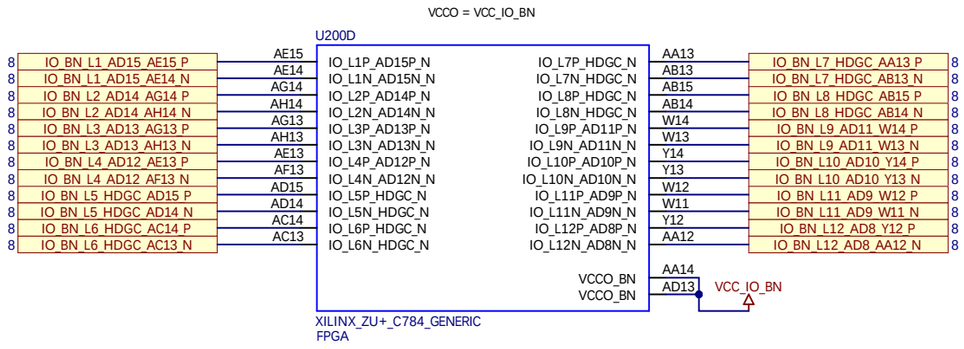

FPGA Reference Voltages

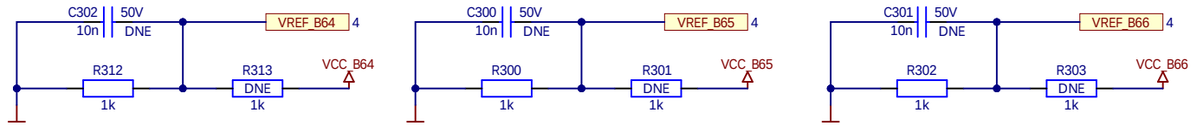

User LEDs

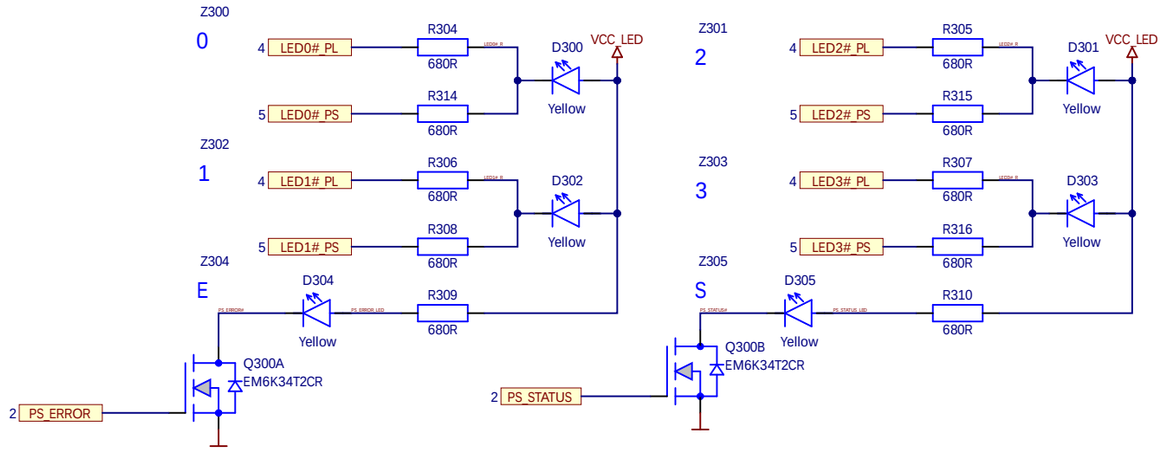

LED Power

not included in user schematics

ENCLUSTRA FPGA SOLUTIONS	Project ME-XU6.PrjPCB	Sheet Name ME-XU6_P03_FPGA_HD_BANKS_LEDS.SchDoc	Customer No 0000	Revision R2.0	DNE = Do Not Equip	Confidential
	Company Enclustra FPGA Solutions	Copyright © 2023 by Enclustra GmbH Switzerland	Project No 513	Designed RLOC	Date 11 Jul 2023	Sheet/sheets 3 / 21

FPGA HP Bank 64

VCCO = VCC_IO_B64 (max 1.8V)

U200H

9	IO_B64_L1_AC9_P	AC9	IO_L1P_T0L0D_64	IO_L13P_T2L0Q_GC_64	AD5	IO_B64_L13_GC_AD5_P	9
9	IO_B64_L1_AD9_N	AD9	IO_L1N_T0L1D_64	IO_L13N_T2L1Q_GC_64	AD4	IO_B64_L13_GC_AD4_N	9
9	IO_B64_L2_AE9_P	AE9	IO_L2P_T0L2_64	IO_L14P_T2L2_GC_64	AC4	IO_B64_L14_GC_AC4_P	9
9	IO_B64_L2_AE8_N	AE8	IO_L2N_T0L3_64	IO_L14N_T2L3_GC_64	AC3	IO_B64_L14_GC_AC3_N	9
9	IO_B64_L3_AD15_AB8_P	AB8	IO_L3P_T0L4_AD15P_64	IO_L15P_T2L4_AD11P_64	AB4	IO_B64_L15_AD11_AB4_P	9
9	IO_B64_L3_AD15_AC8_N	AC8	IO_L3N_T0L5_AD15N_64	IO_L15N_T2L5_AD11N_64	AB3	IO_B64_L15_AD11_AB3_N	9
9	IO_B64_L4_AD7_AD7_P	AD7	IO_L4P_T0U6D_AD7P_64	IO_L16P_T2U6Q_AD3P_64	AD2	IO_B64_L16_AD3_AD2_P	9
9	IO_B64_L4_AD7_AE7_N	AE7	IO_L4N_T0U7D_AD7N_64	IO_L16N_T2U7Q_AD3N_64	AD1	IO_B64_L16_AD3_AD1_N	9
9	IO_B64_L5_AD14_AB7_P	AB7	IO_L5P_T0U8_AD14P_64	IO_L17P_T2U8_AD10P_64	AB2	IO_B64_L17_AD10_AB2_P	9
9	IO_B64_L5_AD14_AC7_N	AC7	IO_L5N_T0U9_AD14N_64	IO_L17N_T2U9_AD10N_64	AC2	IO_B64_L17_AD10_AC2_N	9
9	IO_B64_L6_AD6_AB6_P	AB6	IO_L6P_T0U10_AD6P_64	IO_L18P_T2U10_AD2P_64	AB1	IO_B64_L18_AD2_AB1_P	9
9	IO_B64_L6_AD6_AC6_N	AC6	IO_L6N_T0U11_AD6N_64	IO_L18N_T2U11_AD2N_64	AC1	IO_B64_L18_AD2_AC1_N	9
13	IO_B64_AD6	AD6	IO_T0U12_VRP_64	IO_T2U12_64	AB5	IO_B64_AB5	13
9	IO_B64_L7_AD13_AG9_P	AG9	IO_L7P_T1L0Q_AD13P_64	IO_L19P_T3L0D_AD9P_64	AG4	IO_B64_L19_AD9_AG4_P	9
9	IO_B64_L7_AD13_AH9_N	AH9	IO_L7N_T1L1Q_AD13N_64	IO_L19N_T3L1D_AD9N_64	AH4	IO_B64_L19_AD9_AH4_N	9
9	IO_B64_L8_AD5_AF8_P	AF8	IO_L8P_T1L2_AD5P_64	IO_L20P_T3L2_AD1P_64	AG3	IO_B64_L20_AD1_AG3_P	9
9	IO_B64_L8_AD5_AG8_N	AG8	IO_L8N_T1L3_AD5N_64	IO_L20N_T3L3_AD1N_64	AH3	IO_B64_L20_AD1_AH3_N	9
9	IO_B64_L9_AD12_AH8_P	AH8	IO_L9P_T1L4_AD12P_64	IO_L21P_T3L4_AD8P_64	AE3	IO_B64_L21_AD8_AE3_P	9
9	IO_B64_L9_AD12_AH7_N	AH7	IO_L9N_T1L5_AD12N_64	IO_L21N_T3L5_AD8N_64	AF3	IO_B64_L21_AD8_AF3_N	9
9	IO_B64_L10_AD4_AG6_P	AG6	IO_L10P_T1U6Q_AD4P_64	IO_L22P_T3U6D_AD0P_64	AE2	IO_B64_L22_AD0_AE2_P	9
9	IO_B64_L10_AD4_AG5_N	AG5	IO_L10N_T1U7Q_AD4N_64	IO_L22N_T3U7D_AD0N_64	AF2	IO_B64_L22_AD0_AF2_N	9
9	IO_B64_L11_GC_AF7_P	AF7	IO_L11P_T1U8_GC_64	IO_L23P_T3U8_64	AH2	IO_B64_L23_AH2_P	9
9	IO_B64_L11_GC_AF6_N	AF6	IO_L11N_T1U9_GC_64	IO_L23N_T3U9_64	AH1	IO_B64_L23_AH1_N	9
9	IO_B64_L12_GC_AE5_P	AE5	IO_L12P_T1U10_GC_64	IO_L24P_T3U10_64	AF1	IO_B64_L24_AF1_P	9
9	IO_B64_L12_GC_AF5_N	AF5	IO_L12N_T1U11_GC_64	IO_L24N_T3U11_64	AG1	IO_B64_L24_AG1_N	9
13	IO_B64_AH6	AH6	IO_T1U12_64	IO_T3U12_64	AE4	IO_B64_AE4	13
3	VREF_B64	AA7	VREF_64	VCCO_64	AC5		
				VCCO_64	AD8	VCC_B64	
				VCCO_64	AG7		

XILINX_ZU+_C784_GENERIC
FPGA

FPGA HP Bank 66

VCCO = VCC_IO_B66 (max 1.8V)

U200F

9	IO_B66_L1_G1_P	G1	IO_L1P_T0L0D_66	IO_L13P_T2L0Q_GC_66	D7	IO_B66_L13_GC_D7_P	8
9	IO_B66_L1_F1_N	F1	IO_L1N_T0L1D_66	IO_L13N_T2L1Q_GC_66	D6	IO_B66_L13_GC_D6_N	8
9	IO_B66_L2_E1_P	E1	IO_L2P_T0L2_66	IO_L14P_T2L2_GC_66	E5	IO_B66_L14_GC_E5_P	8
9	IO_B66_L2_D1_N	D1	IO_L2N_T0L3_66	IO_L14N_T2L3_GC_66	D5	IO_B66_L14_GC_D5_N	8
9	IO_B66_L3_AD15_F2_P	F2	IO_L3P_T0L4_AD15P_66	IO_L15P_T2L4_AD11P_66	G6	IO_B66_L15_AD11_G6_P	8
9	IO_B66_L3_AD15_E2_N	E2	IO_L3N_T0L5_AD15N_66	IO_L15N_T2L5_AD11N_66	F6	IO_B66_L15_AD11_F6_N	8
9	IO_B66_L4_AD7_G3_P	G3	IO_L4P_T0U6D_AD7P_66	IO_L16P_T2U6Q_AD3P_66	G8	IO_B66_L16_AD3_G8_P	8
9	IO_B66_L4_AD7_F3_N	F3	IO_L4N_T0U7D_AD7N_66	IO_L16N_T2U7Q_AD3N_66	F7	IO_B66_L16_AD3_F7_N	8
9	IO_B66_L5_AD14_E4_P	E4	IO_L5P_T0U8_AD14P_66	IO_L17P_T2U8_AD10P_66	F8	IO_B66_L17_AD10_F8_P	8
9	IO_B66_L5_AD14_E3_N	E3	IO_L5N_T0U9_AD14N_66	IO_L17N_T2U9_AD10N_66	E8	IO_B66_L17_AD10_E8_N	8
8	IO_B66_L6_AD6_G5_P	G5	IO_L6P_T0U10_AD6P_66	IO_L18P_T2U10_AD2P_66	E9	IO_B66_L18_AD2_E9_P	8
8	IO_B66_L6_AD6_F5_N	F5	IO_L6N_T0U11_AD6N_66	IO_L18N_T2U11_AD2N_66	D9	IO_B66_L18_AD2_D9_N	8
2	FPGA_VRP_66	G4	IO_T0U12_VRP_66	IO_T2U12_66	E7	LED0#_PL	3
8	IO_B66_L7_AD13_C1_P	C1	IO_L7P_T1L0Q_AD13P_66	IO_L19P_T3L0D_AD9P_66	B5	IO_B66_L19_AD9_B5_P	8
8	IO_B66_L7_AD13_B1_N	B1	IO_L7N_T1L1Q_AD13N_66	IO_L19N_T3L1D_AD9N_66	A5	IO_B66_L19_AD9_A5_N	8
8	IO_B66_L8_AD5_A2_P	A2	IO_L8P_T1L2_AD5P_66	IO_L20P_T3L2_AD1P_66	C6	IO_B66_L20_AD1_C6_P	8
8	IO_B66_L8_AD5_A1_N	A1	IO_L8N_T1L3_AD5N_66	IO_L20N_T3L3_AD1N_66	B6	IO_B66_L20_AD1_B6_N	8
8	IO_B66_L9_AD12_B3_P	B3	IO_L9P_T1L4_AD12P_66	IO_L21P_T3L4_AD8P_66	A7	IO_B66_L21_AD8_A7_P	8
8	IO_B66_L9_AD12_A3_N	A3	IO_L9N_T1L5_AD12N_66	IO_L21N_T3L5_AD8N_66	A6	IO_B66_L21_AD8_A6_N	8
8	IO_B66_L10_AD4_B4_P	B4	IO_L10P_T1U6Q_AD4P_66	IO_L22P_T3U6D_AD0P_66	C8	IO_B66_L22_AD0_C8_P	8
8	IO_B66_L10_AD4_A4_N	A4	IO_L10N_T1U7Q_AD4N_66	IO_L22N_T3U7D_AD0N_66	B8	IO_B66_L22_AD0_B8_N	8
9	IO_B66_L11_GC_D4_P	D4	IO_L11P_T1U8_GC_66	IO_L23P_T3U8_66	A9	IO_B66_L23_A9_P	8
9	IO_B66_L11_GC_C4_N	C4	IO_L11N_T1U9_GC_66	IO_L23N_T3U9_66	A8	IO_B66_L23_A8_N	8
8	IO_B66_L12_GC_C3_P	C3	IO_L12P_T1U10_GC_66	IO_L24P_T3U10_66	C9	IO_B66_L24_C9_P	8
8	IO_B66_L12_GC_C2_N	C2	IO_L12N_T1U11_GC_66	IO_L24N_T3U11_66	B9	IO_B66_L24_B9_N	8
15	I2C_SDA_PL	D2	IO_T1U12_66	IO_T3U12_66	C7	I2C_SCL_PL	15
				VCCO_66	B7		
				VCCO_66	D3	VCC_B66	
				VCCO_66	E6		
3	VREF_B66	G9	VREF_66				

XILINX_ZU+_C784_GENERIC
FPGA

FPGA HP Bank 65

VCCO = VCC_IO_B65 (max 1.8V)

U200G

9	IO_B65_L1_W8_P	W8	IO_L1P_T0L0D_65	IO_L13P_T2L0Q_GC_65	L7	IO_B65_L13_GC_L7_P	8
9	IO_B65_L1_Y8_N	Y8	IO_L1N_T0L1D_65	IO_L13N_T2L1Q_GC_65	L6	IO_B65_L13_GC_L6_N	8
9	IO_B65_L2_U9_P	U9	IO_L2P_T0L2_65	IO_L14P_T2L2_GC_65	M6	IO_B65_L14_GC_M6_P	8
9	IO_B65_L2_V9_N	V9	IO_L2N_T0L3_65	IO_L14N_T2L3_GC_65	L5	IO_B65_L14_GC_L5_N	8
9	IO_B65_L3_AD15_U8_P	U8	IO_L3P_T0L4_AD15P_65	IO_L15P_T2L4_AD11P_65	N7	IO_B65_L15_AD11_N7_P	8
9	IO_B65_L3_AD15_V8_N	V8	IO_L3N_T0L5_AD15N_65	IO_L15N_T2L5_AD11N_65	N6	IO_B65_L15_AD11_N6_N	8
9	IO_B65_L4_AD7_ALERT_R8_P	R8	IO_L4P_T0U6D_AD7P_ALERT_65	IO_L16P_T2U6Q_AD3P_65	P7	IO_B65_L16_AD3_P7_P	8
9	IO_B65_L4_AD7_T8_N	T8	IO_L4N_T0U7D_AD7N_65	IO_L16N_T2U7Q_AD3N_65	P6	IO_B65_L16_AD3_P6_N	8
9	IO_B65_L5_AD14_R7_P	R7	IO_L5P_T0U8_AD14P_65	IO_L17P_T2U8_AD10P_65	N9	IO_B65_L17_AD10_N9_P	8
9	IO_B65_L5_AD14_T7_N	T7	IO_L5N_T0U9_AD14N_65	IO_L17N_T2U9_AD10N_65	N8	IO_B65_L17_AD10_N8_N	8
8	IO_B65_L6_AD6_R6_P	R6	IO_L6P_T0U10_AD6P_65	IO_L18P_T2U10_AD2P_65	M8	IO_B65_L18_AD2_M8_P	8
8	IO_B65_L6_AD6_T6_N	T6	IO_L6N_T0U11_AD6N_65	IO_L18N_T2U11_AD2N_65	L8	IO_B65_L18_AD2_L8_N	8
2	FPGA_VRP_65	W9	IO_T0U12_VRP_65	IO_T2U12_65	P9	LED2#_PL	3
8	IO_B65_L7_AD13_L1_P	L1	IO_L7P_T1L0Q_AD13P_65	IO_L19P_T3L0D_AD9P_65	J5	IO_B65_L19_AD9_J5_P	8
8	IO_B65_L7_AD13_K1_N	K1	IO_L7N_T1L1Q_AD13N_65	IO_L19N_T3L1D_AD9N_65	J4	IO_B65_L19_AD9_J4_N	8
8	IO_B65_L8_AD5_J1_P	J1	IO_L8P_T1L2_AD5P_65	IO_L20P_T3L2_AD1P_65	J6	IO_B65_L20_AD1_J6_P	8
8	IO_B65_L8_AD5_H1_N	H1	IO_L8N_T1L3_AD5N_65	IO_L20N_T3L3_AD1N_65	H6	IO_B65_L20_AD1_H6_N	8
8	IO_B65_L9_AD12_K2_P	K2	IO_L9P_T1L4_AD12P_65	IO_L21P_T3L4_AD8P_65	J7	IO_B65_L21_AD8_J7_P	8
8	IO_B65_L9_AD12_J2_N	J2	IO_L9N_T1L5_AD12N_65	IO_L21N_T3L5_AD8N_65	H7	IO_B65_L21_AD8_H7_N	8
8	IO_B65_L10_AD4_H4_P	H4	IO_L10P_T1U6Q_AD4P_65	IO_L22P_T3U6D_AD0P_65	K8	IO_B65_L22_AD0_K8_P	8
8	IO_B65_L10_AD4_H3_N	H3	IO_L10N_T1U7Q_AD4N_65	IO_L22N_T3U7D_AD0N_65	K7	IO_B65_L22_AD0_K7_N	8
9	IO_B65_L11_GC_K4_P	K4	IO_L11P_T1U8_GC_65	IO_L23P_T3U8_SCLK_65	K9	IO_B65_L23_SCLK_K9_P	8
9	IO_B65_L11_GC_K3_N	K3	IO_L11N_T1U9_GC_65	IO_L23N_T3U9_65	J9	IO_B65_L23_J9_N	8
8	IO_B65_L12_GC_L3_P	L3	IO_L12P_T1U10_GC_65	IO_L24P_T3U10_SDA_65	H9	IO_B65_L24_SDA_H9_P	8
8	IO_B65_L12_GC_L2_N	L2	IO_L12N_T1U11_GC_65	IO_L24N_T3U11_PERSTN_65	H8	IO_B65_L24_PERST#_H8_N	2, 8
3	LED1#_PL	H2	IO_T1U12_65	IO_T3U12_65	K5	LED3#_PL	3
				VCCO_65	H5		
				VCCO_65	J3	VCC_B65	
				VCCO_65	L4		
3	VREF_B65	R9	VREF_65				

XILINX_ZU+_C784_GENERIC
FPGA

FPGA MGT Bank 224

only available in ZU4/ZU5 devices

U200I

8	MGT_B224_REFCLK0_Y6_P	Y6	MGTREFCLK0P_224	MGTREFCLK1P_224	V6	MGT_B224_REFCLK1_V6_P	8
8	MGT_B224_REFCLK0_Y5_N	Y5	MGTREFCLK0N_224	MGTREFCLK1N_224	V5	MGT_B224_REFCLK1_V5_N	8
8	MGT_B224_RX0_Y2_P	Y2	MGTHRXP0_224	MGTHTXP0_224	W4	MGT_B224_TX0_W4_P	8
8	MGT_B224_RX0_Y1_N	Y1	MGTHRXN0_224	MGTHTXN0_224	W3	MGT_B224_TX0_W3_N	8
8	MGT_B224_RX1_V2_P	V2	MGTHRXP1_224	MGTHTXP1_224	U4	MGT_B224_TX1_U4_P	8
8	MGT_B224_RX1_V1_N	V1	MGTHRXN1_224	MGTHTXN1_224	U3	MGT_B224_TX1_U3_N	8
8	MGT_B224_RX2_T2_P	T2	MGTHRXP2_224	MGTHTXP2_224	R4	MGT_B224_TX2_R4_P	8
8	MGT_B224_RX2_T1_N	T1	MGTHRXN2_224	MGTHTXN2_224	R3	MGT_B224_TX2_R3_N	8
8	MGT_B224_RX3_P2_P	P2	MGTHRXP3_224	MGTHTXP3_224	N4	MGT_B224_TX3_N4_P	8
8	MGT_B224_RX3_P1_N	P1	MGTHRXN3_224	MGTHTXN3_224	N3	MGT_B224_TX3_N3_N	8

XILINX_ZU+_C784_GENERIC
FPGA

FPGA PS GTR Bank 505

U200R

8	MGTPS_REFCLK0_F23_P	F23	PS_MGTREFCLK0P_505	PS_MGTREFCLK2P_505	C21	CLK100_GTR_P	12
8	MGTPS_REFCLK0_F24_N	F24	PS_MGTREFCLK0N_505	PS_MGTREFCLK2N_505	C22	CLK100_GTR_N	12
8	MGTPS_REFCLK1_E21_P	E21	PS_MGTREFCLK1P_505	PS_MGTREFCLK3P_505	A21	CLK27_GTR_P	12
8	MGTPS_REFCLK1_E22_N	E22	PS_MGTREFCLK1N_505	PS_MGTREFCLK3N_505	A22	CLK27_GTR_N	12
8	MGTPS_RX0_F27_P	F27	PS_MGTRRXP0_505	PS_MGTRTXP0_505	E25	MGTPS_TX0_E25_P	8
8	MGTPS_RX0_F28_N	F28	PS_MGTRRXN0_505	PS_MGTRTXN0_505	E26	MGTPS_TX0_E26_N	8
8	MGTPS_RX1_D27_P	D27	PS_MGTRRXP1_505	PS_MGTRTXP1_505	D23	MGTPS_TX1_D23_P	8
8	MGTPS_RX1_D28_N	D28	PS_MGTRRXN1_505	PS_MGTRTXN1_505	D24	MGTPS_TX1_D24_N	8
8	MGTPS_RX2_B27_P	B27	PS_MGTRRXP2_505	PS_MGTRTXP2_505	C25	MGTPS_TX2_C25_P	8
8	MGTPS_RX2_B28_N	B28	PS_MGTRRXN2_505	PS_MGTRTXN2_505	C26	MGTPS_TX2_C26_N	8
8	MGTPS_RX3_A25_P	A25	PS_MGTRRXP3_505	PS_MGTRTXP3_505	B23	MGTPS_TX3_B23_P	8
8	MGTPS_RX3_A26_N	A26	PS_MGTRRXN3_505	PS_MGTRTXN3_505	B24	MGTPS_TX3_B24_N	8

XILINX_ZU+_C784_GENERIC
FPGA

FPGA PS DDR Bank 504

VCCO = VCC_1V2

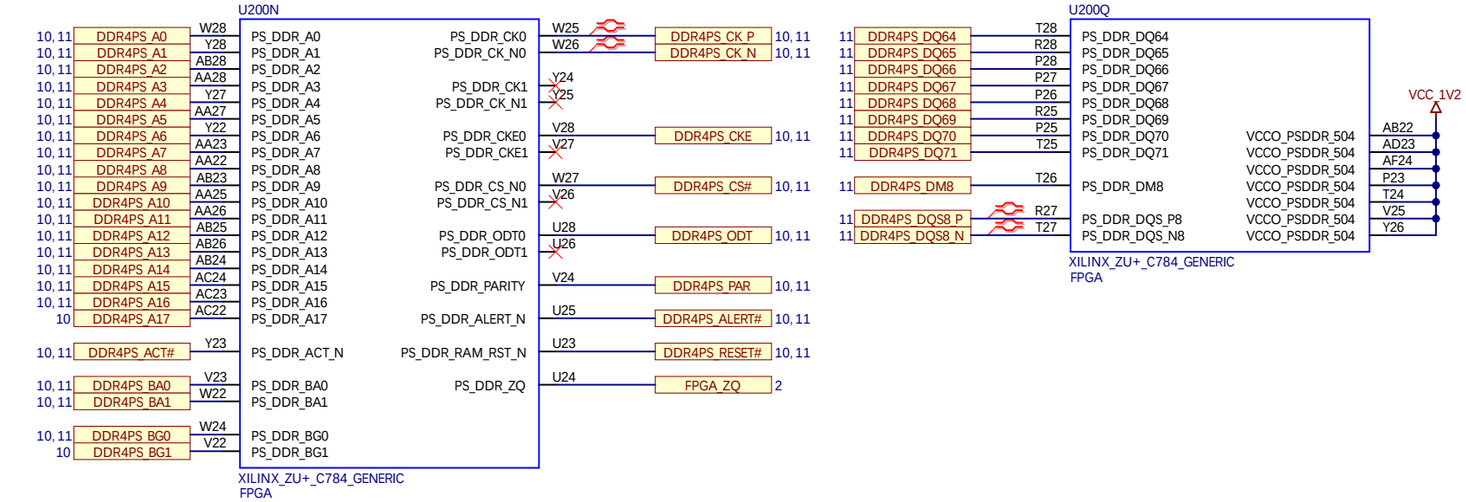

FPGA PS Bank 500

VCCO = VCC_1V8

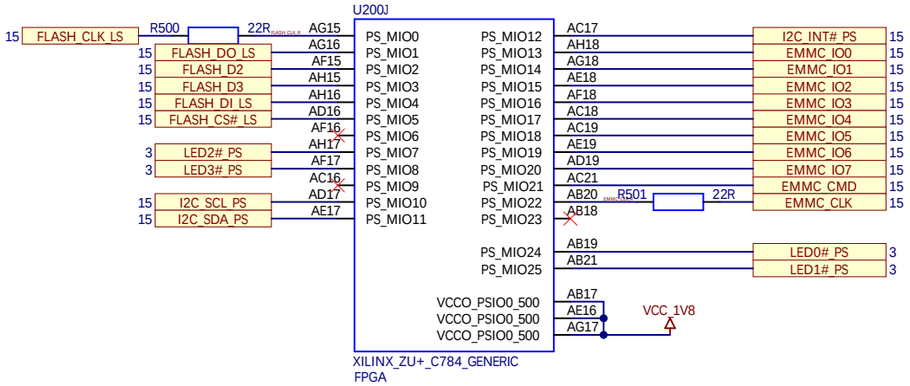

FPGA PS Bank 501

VCCO = VCC_CFG_MIO

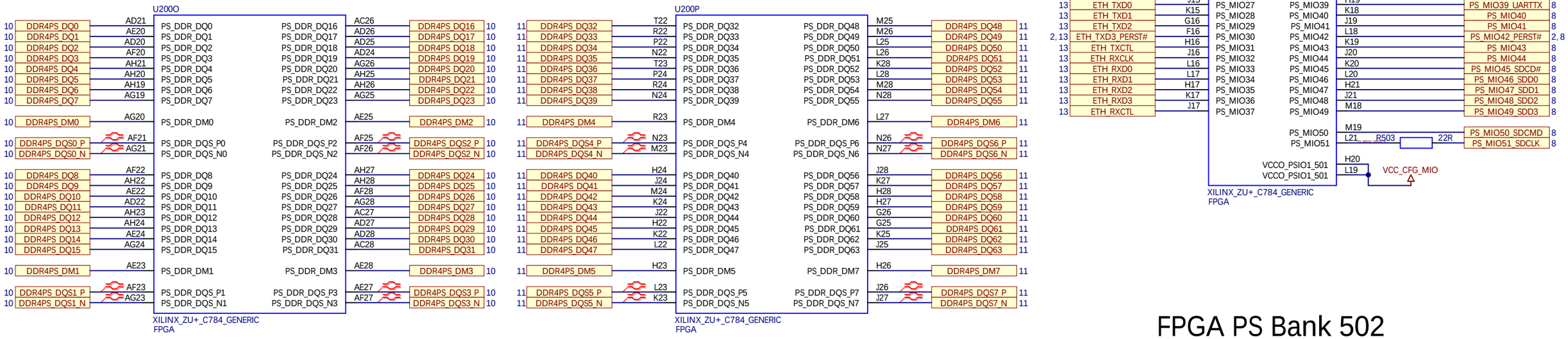

Reset Circuit

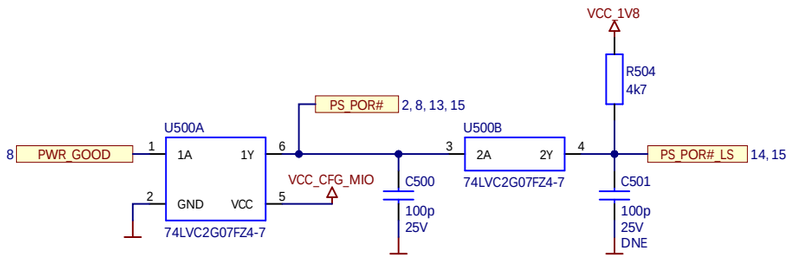

FPGA PS Bank 502

VCCO = VCC_1V8

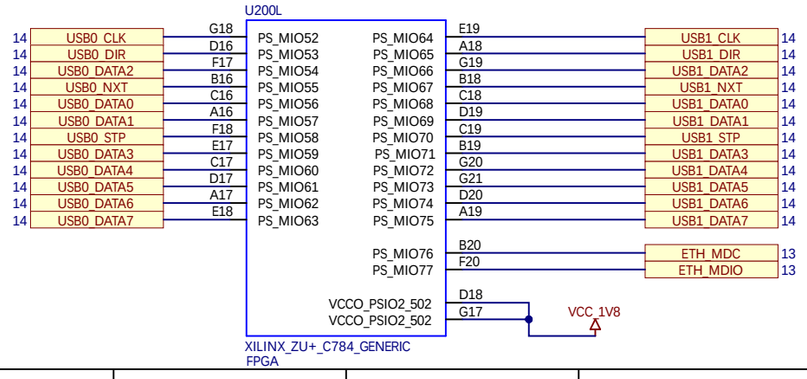

ENCLUSTRA FPGA SOLUTIONS	Project ME-XU6.PrjPCB	Sheet Name ME-XU6_P05_FPGA_PS_BANKS.SchDoc	Customer No 0000	Revision R2.0	DNE = Do Not Equip	Confidential
	Company Enclustra FPGA Solutions	Copyright © 2023 by Enclustra GmbH Switzerland	Project No 513	Designed RLOC	Date 11 Jul 2023	Sheet/sheets 5 / 21

FPGA Ground

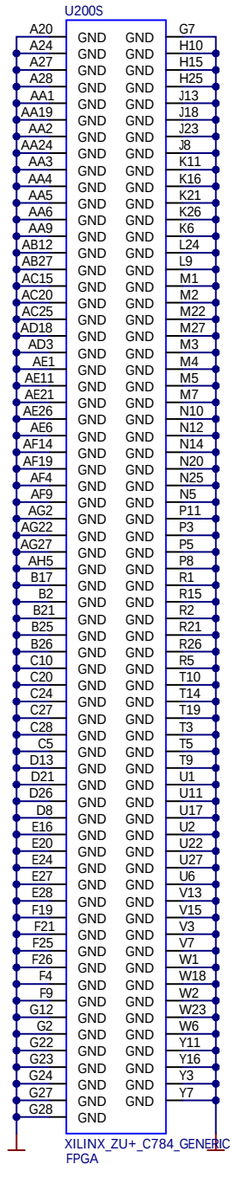

FPGA Power

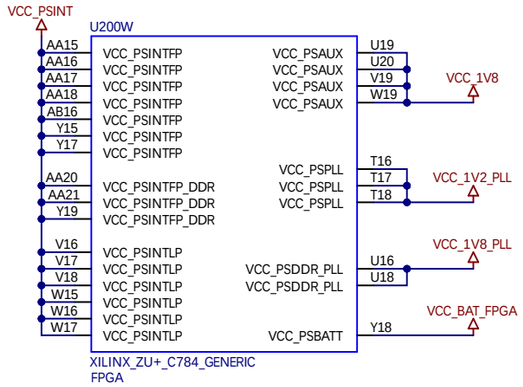

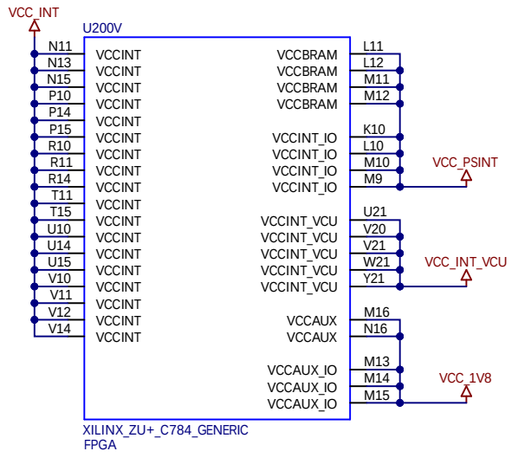

FPGA MGT Power

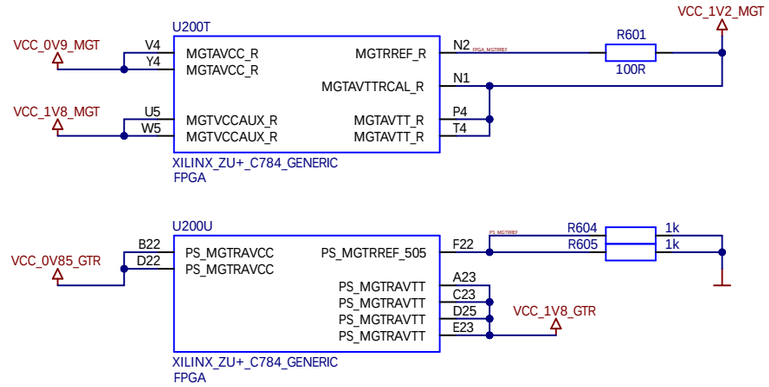

FPGA ADC Power Filter

not included in user schematics

FPGA VCU Power Selection

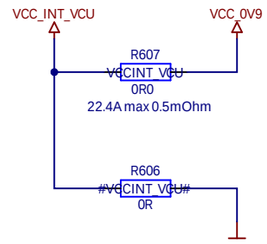

FPGA MGT Power Filters

not included in user schematics

FPGA PS Power Filters

not included in user schematics

ENCLUSTRA FPGA SOLUTIONS	Project ME-XU6.PrjPCB	Sheet Name ME-XU6_P06_FPGA_POWER.SchDoc	Customer No 0000	Revision R2.0	DNE = Do Not Equip	Confidential
	Company Enclustra FPGA Solutions	Copyright © 2023 by Enclustra GmbH Switzerland	Project No 513	Designed RLOC	Date 11 Jul 2023	Sheet/sheets 6 / 21

FPGA Decoupling

not included in user schematics

Board Decoupling

not included in user schematics

ENCLUSTRA FPGA SOLUTIONS	Project ME-XU6.PrjPCB	Sheet Name ME-XU6_P07_POWER_DECOUPLING.SchDoc	Customer No 0000	Revision R2.0	DNE = Do Not Equip	Confidential
	Company Enclustra FPGA Solutions	Copyright © 2023 by Enclustra GmbH Switzerland	Project No 513	Designed RLOC	Date 11 Jul 2023	Sheet/sheets 7 / 21

Module Connector A

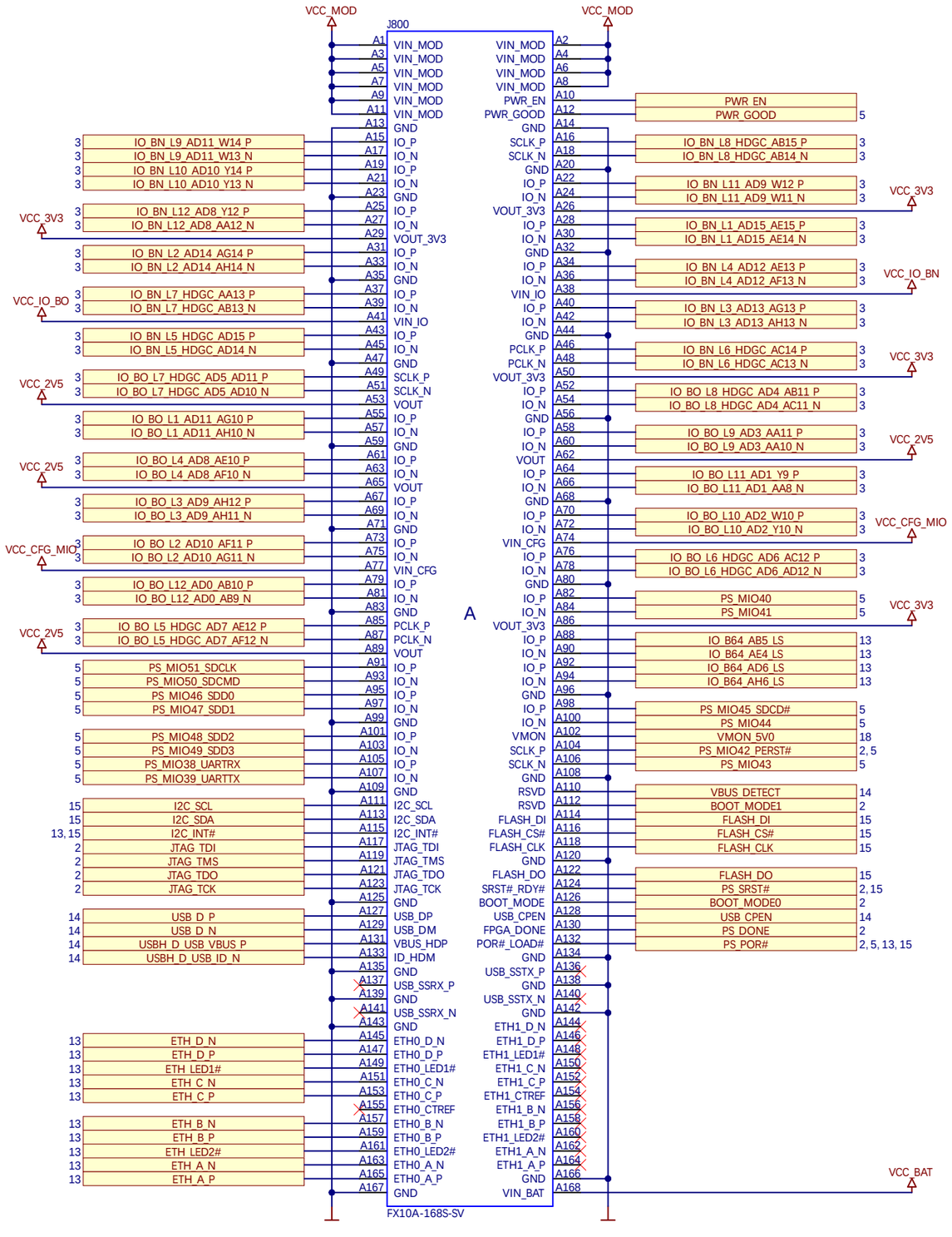

Module Connector B

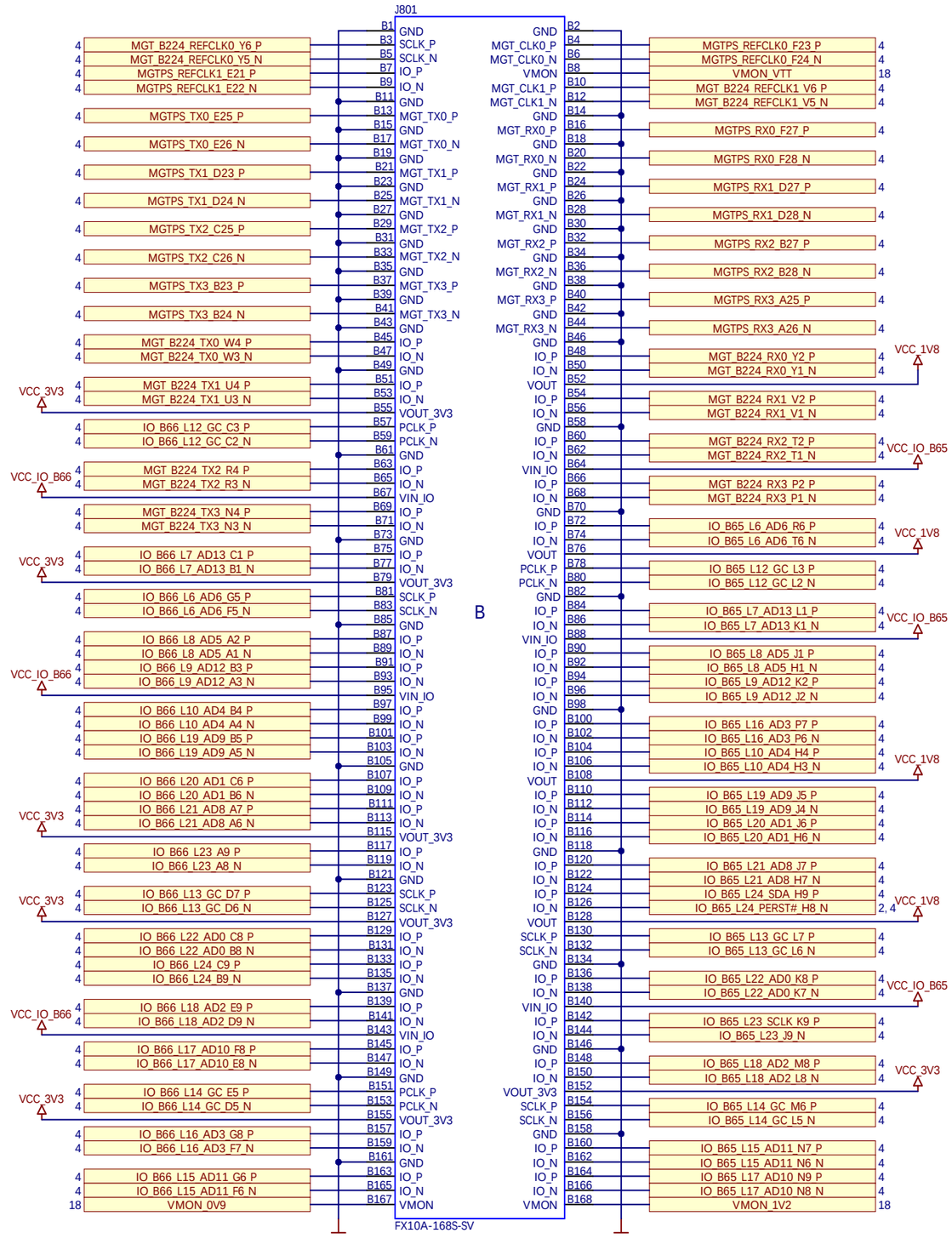

ENCLUSTRA FPGA SOLUTIONS	Project ME-XU6.PrjPCB	Sheet Name ME-XU6_P08_MOD_CON_A_B.SchDoc	Customer No 0000	Revision R2.0	DNE = Do Not Equip	Confidential
	Company Enclustra FPGA Solutions	Copyright © 2023 by Enclustra GmbH Switzerland	Project No 513	Designed RLOC	Date 11 Jul 2023	Sheet/sheets 8 / 21

Module Connector C

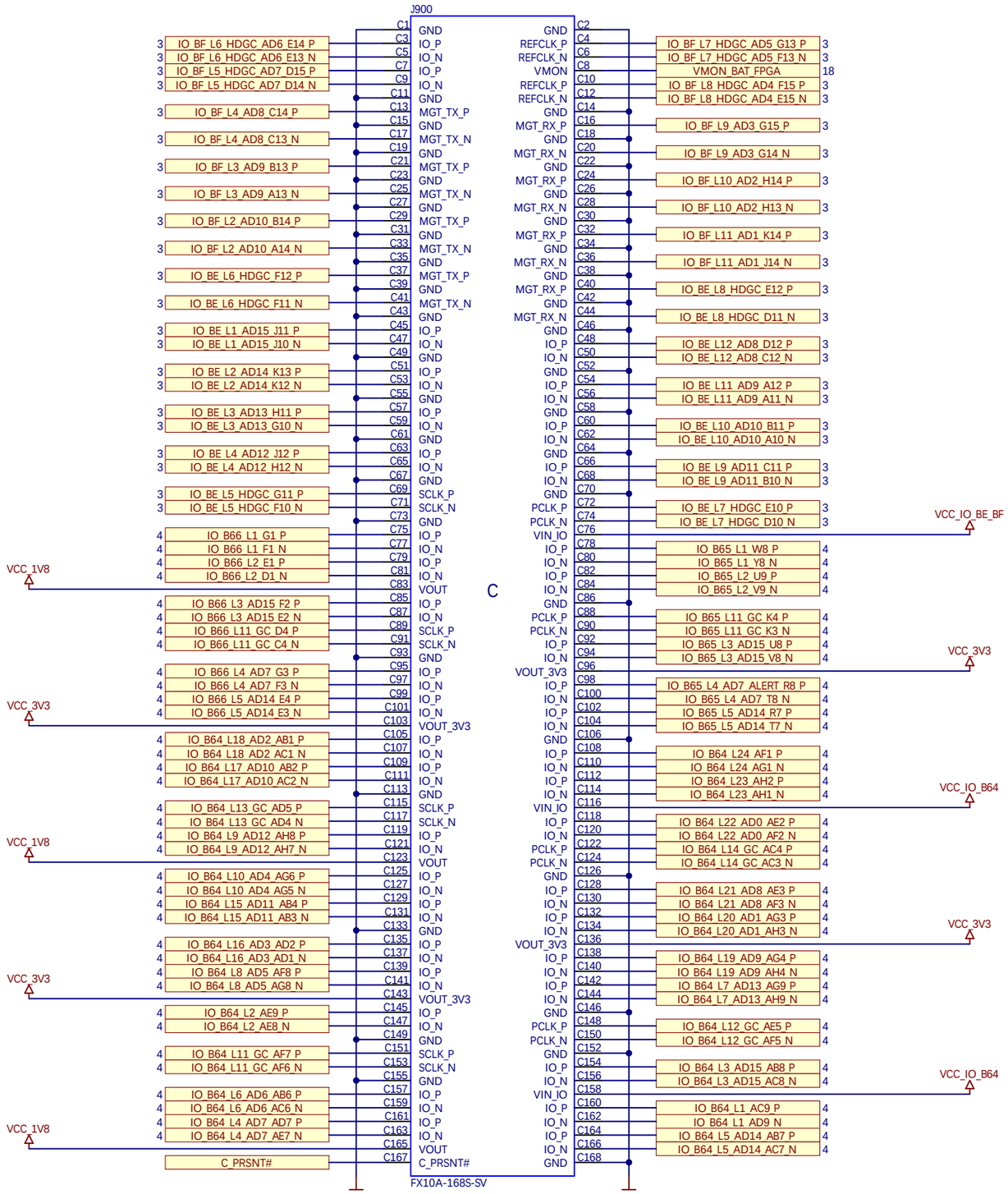

IO Voltage Generation

when C connector is not present on base board

PS DDR4 SDRAM

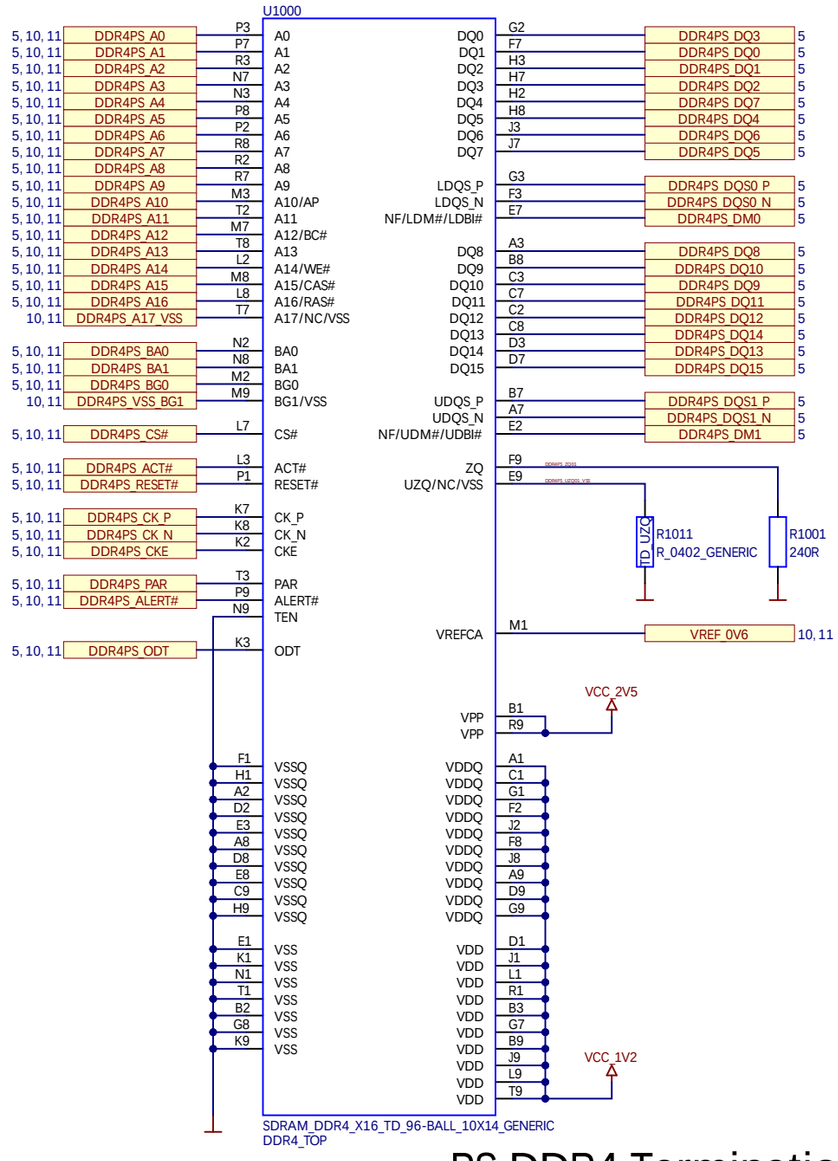

PS DDR4 Termination

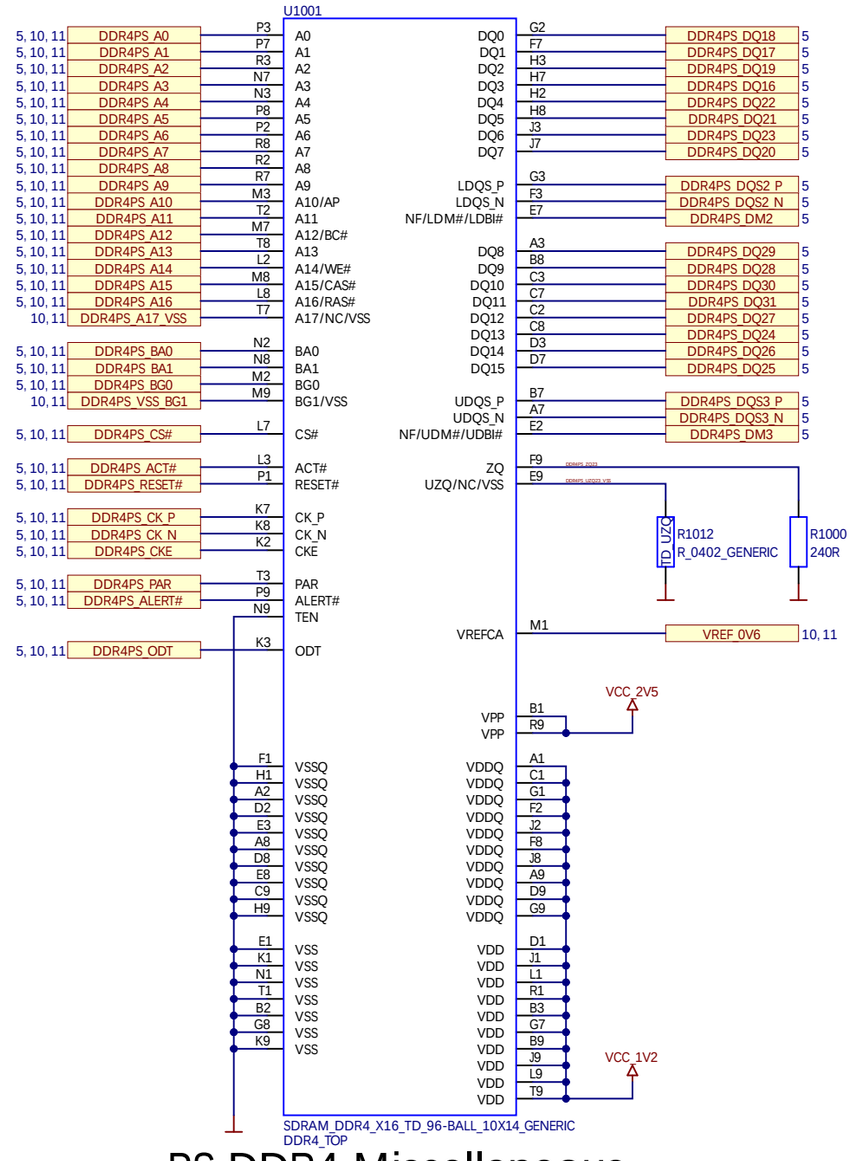

PS DDR4 Miscellaneous

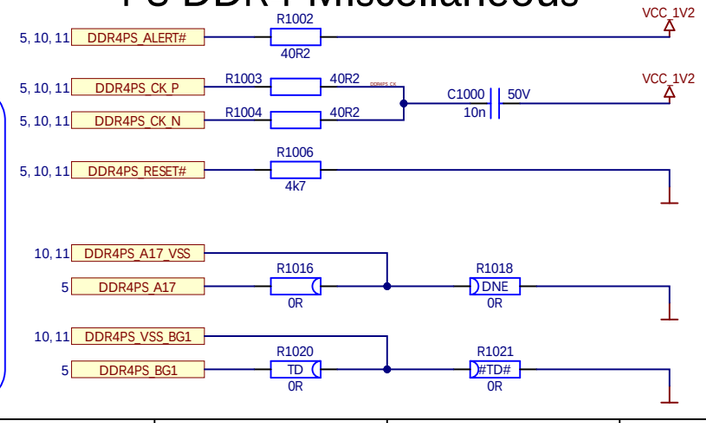

not included in user schematics

ENCLUSTRA FPGA SOLUTIONS	Project ME-XU6.PrjPCB	Sheet Name ME-XU6_P10_PS_DDR4_SDRAM_0-3.SchDoc	Customer No 0000	Revision R2.0	DNE = Do Not Equip	Confidential
	Company Enclustra FPGA Solutions	Copyright © 2023 by Enclustra GmbH Switzerland	Project No 513	Designed RLOC	Date 11 Jul 2023	Sheet/sheets 10 / 21

PS DDR4 SDRAM

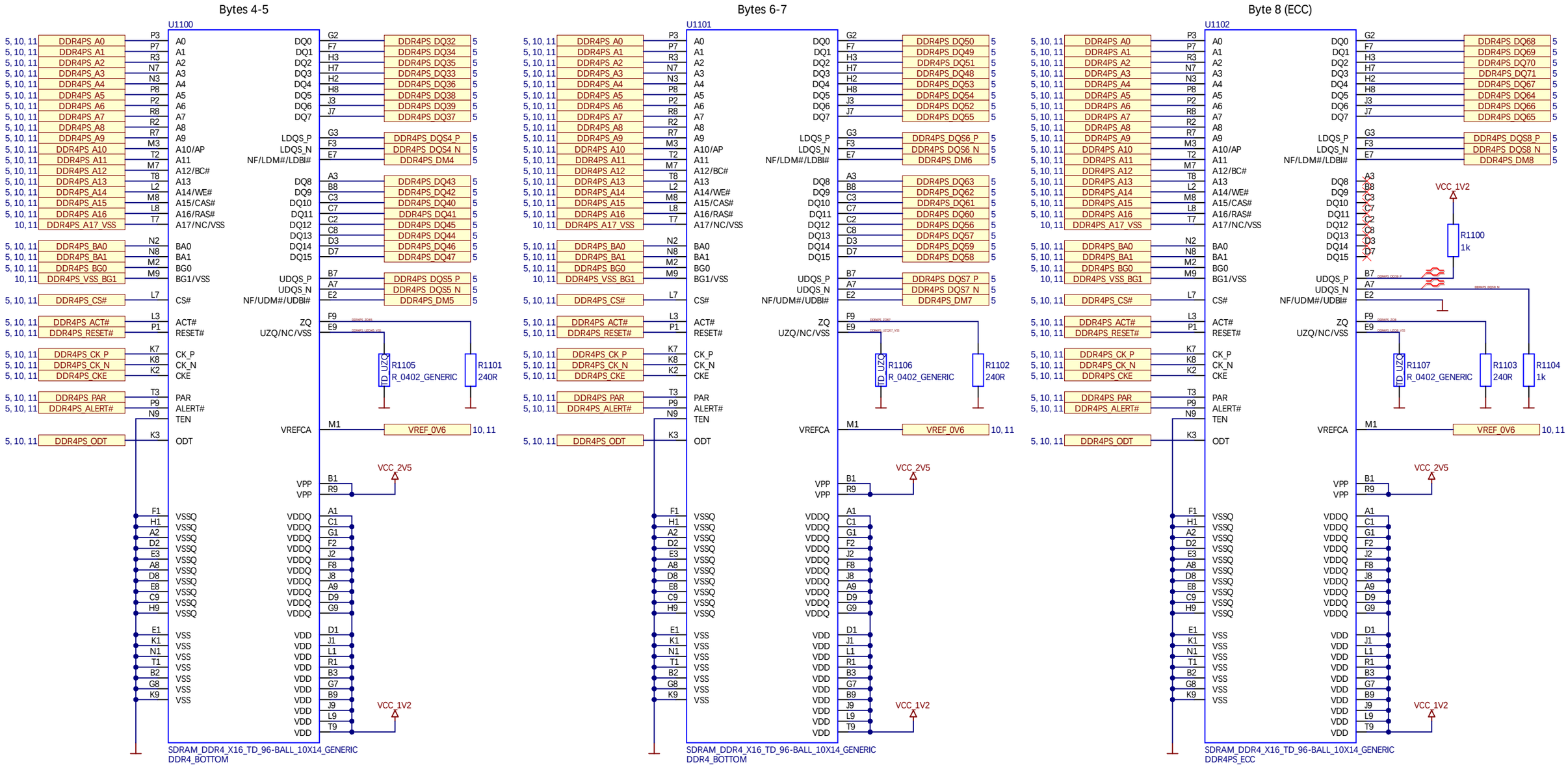

PS DDR4 Decoupling

not included in user schematics

ENCLUSTRA FPGA SOLUTIONS	Project ME-XU6.PrjPCB	Sheet Name ME-XU6_P11_PS_DDR4_SDRAM_4-8.SchDoc	Customer No 0000	Revision R2.0	DNE = Do Not Equip	Confidential
	Company Enclustra FPGA Solutions	Copyright © 2023 by Enclustra GmbH Switzerland	Project No 513	Designed RLOC	Date 11 Jul 2023	Sheet/sheets 11 / 21

PS 33.3 MHz Oscillator

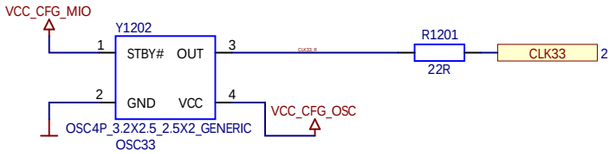

GTR 100 MHz Oscillator

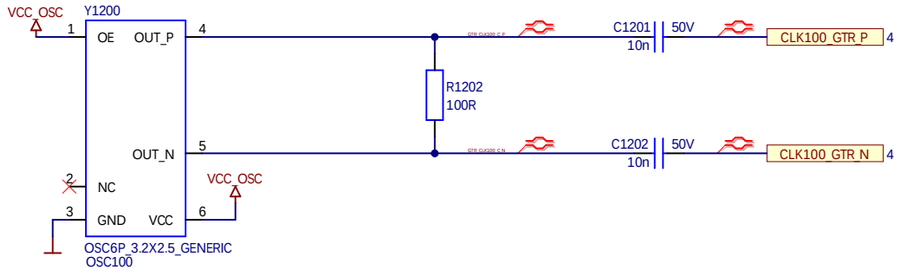

USB 24 MHz Oscillator

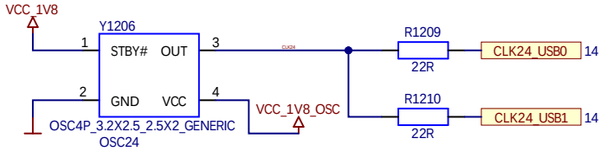

GTR 27 MHz Oscillator

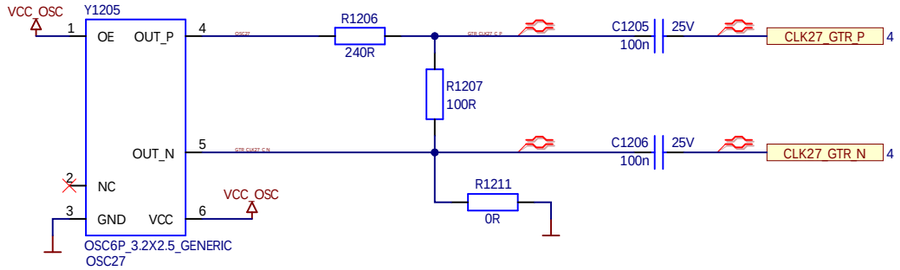

RTC Crystal

32.768 kHz

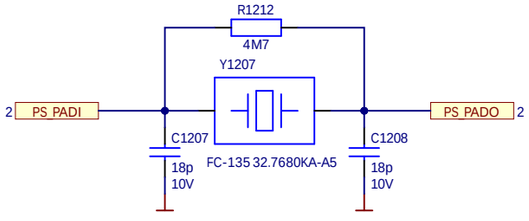

Oscillator Power Filters

not included in user schematics

Gigabit Ethernet PHY

not available when using PS PCIe with dedicated PERST# input

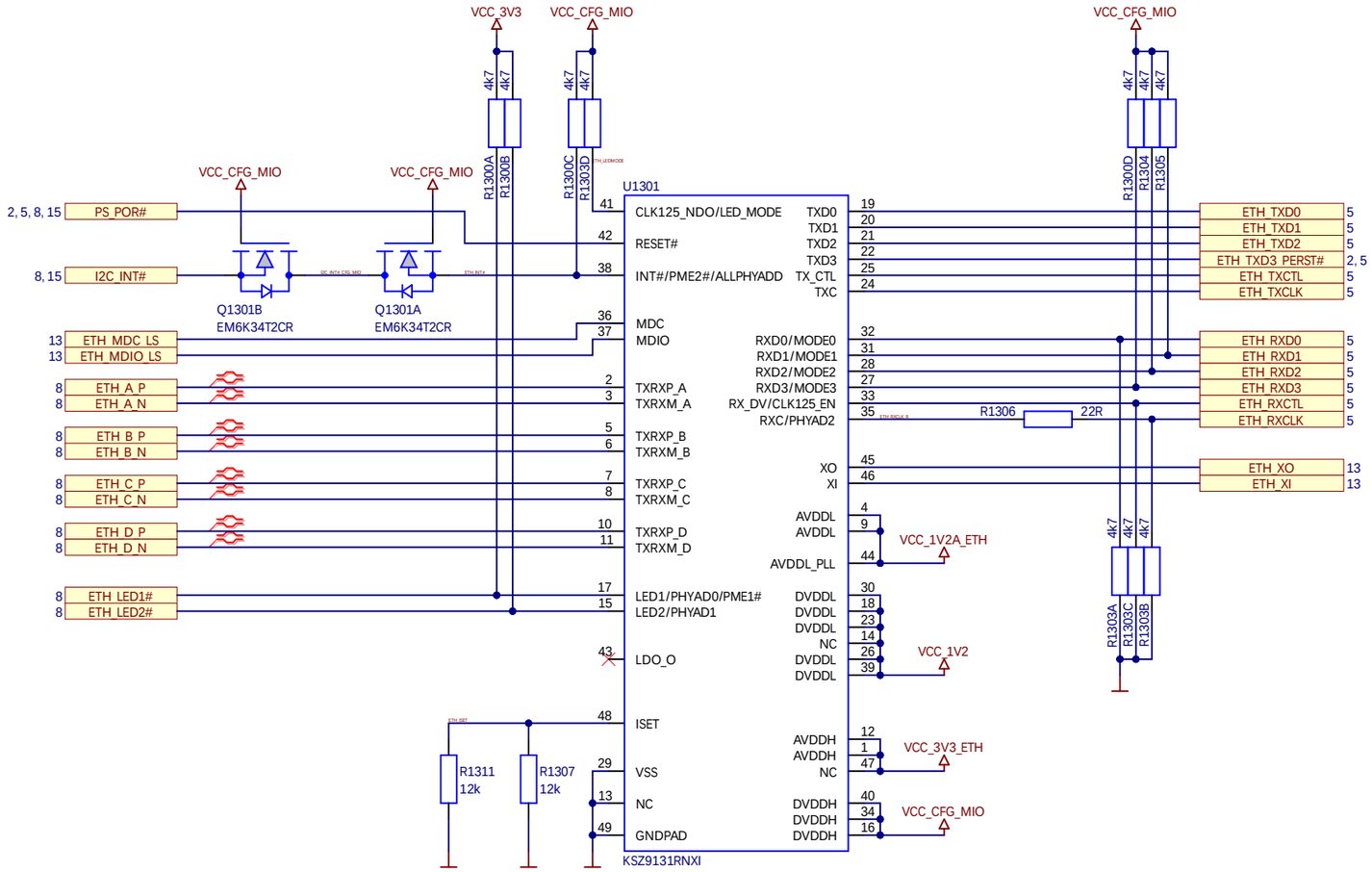

MODE<3:0> = 1110 -> RGMII, all capabilities

LED_Mode Pull up = Single LED

PhyAddress <2:0> = 011 -> 3

LED1 and LED2 are active low

Ethernet Power Filters

not included in user schematics

MDIO Level Shifter

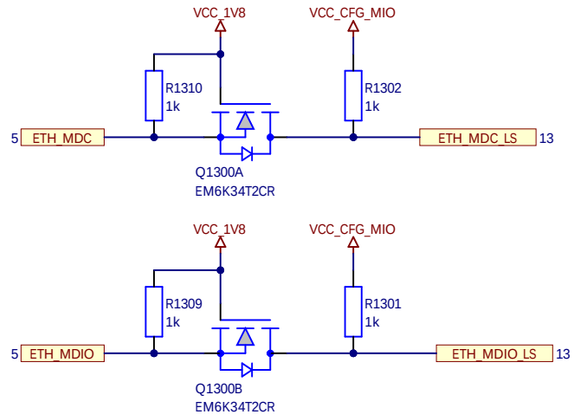

IO Level Shifter

if pins are used VCC_B64 ≥ 1.2V is required.

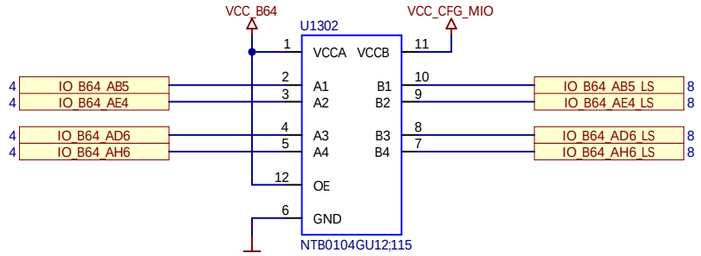

Ethernet Crystal

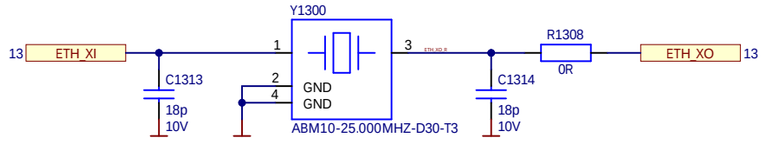

ENCLUSTRA FPGA SOLUTIONS	Project ME-XU6.PrjPCB	Sheet Name ME-XU6_P13_PS_ETHERNET_MISC_LS.SchDoc	Customer No 0000	Revision R2.0	DNE = Do Not Equip	Confidential
	Company Enclustra FPGA Solutions	Copyright © 2023 by Enclustra GmbH Switzerland	Project No 513	Designed RLOC	Date 11 Jul 2023	Sheet/sheets 13 / 21

USB 2.0 Device/Host PHY 0

A-Device ID=GND, B-Device ID=Float, Not Used ID=VDD33

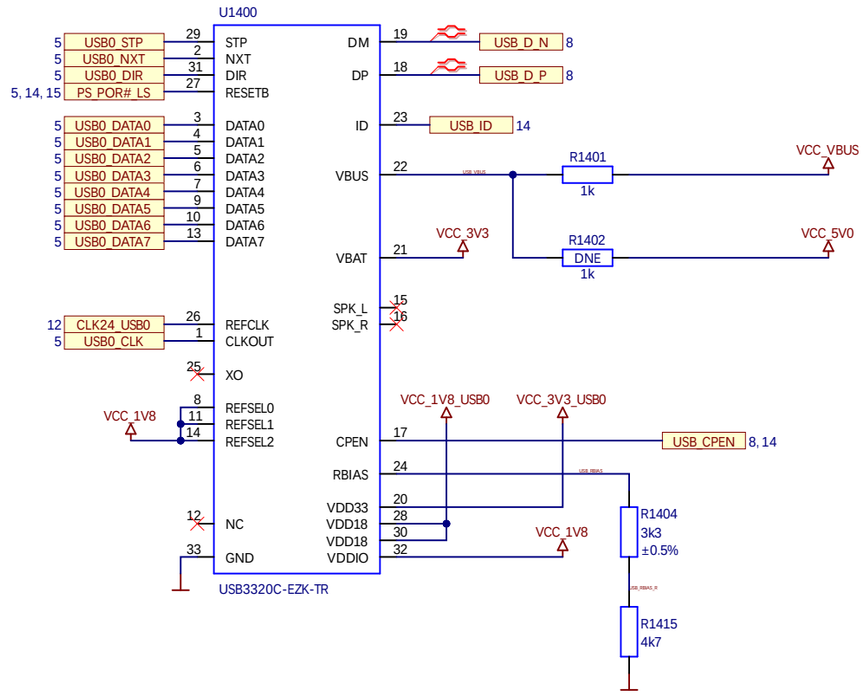

USB 2.0 Host PHY 1

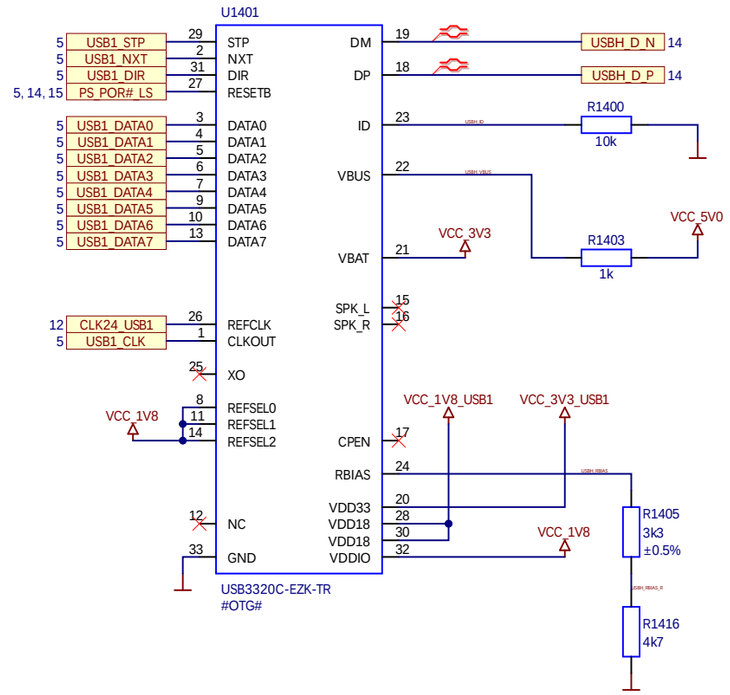

USB 2.0 Host/Device Mode

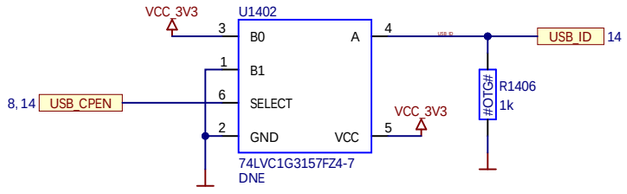

USB 2.0 VBUS Detect

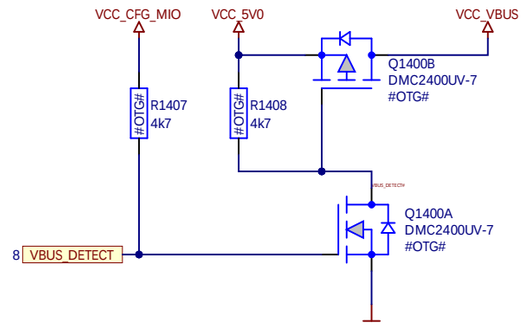

USB PHY 0 - OTG Support

optional

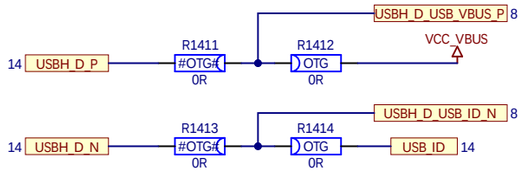

USB 2.0 Power Decoupling

not included in user schematics

ENCLUSTRA FPGA SOLUTIONS	Project ME-XU6.PrjPCB	Sheet Name ME-XU6_P14_USB2_PHYS.SchDoc	Customer No 0000	Revision R2.0	DNE = Do Not Equip	Confidential
	Company Enclustra FPGA Solutions	Copyright © 2023 by Enclustra GmbH Switzerland	Project No 513	Designed RLOC	Date 11 Jul 2023	Sheet/sheets 14 / 21

Flash Level Shifter

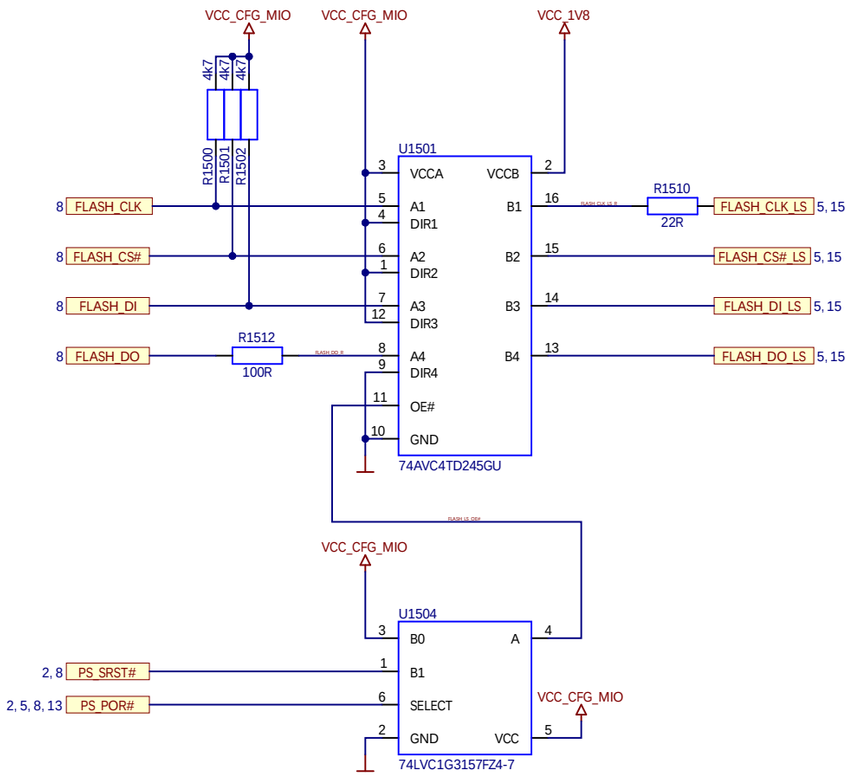

Quad SPI Flash

pin compatible with Micron N25Q512A11G1240F

Micron requires VCC_FLASH = 1.8V

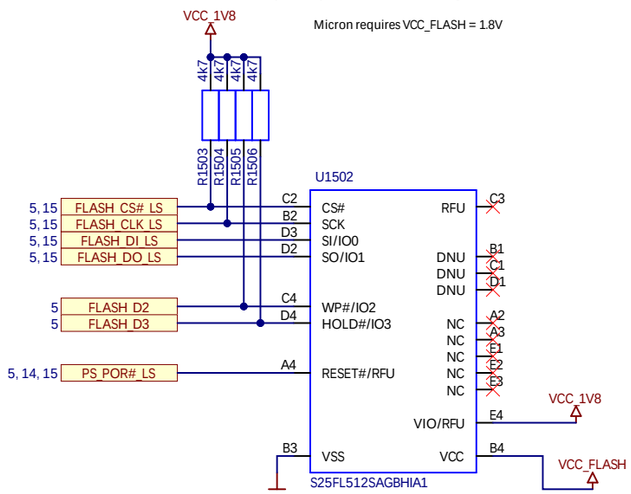

eMMC Flash

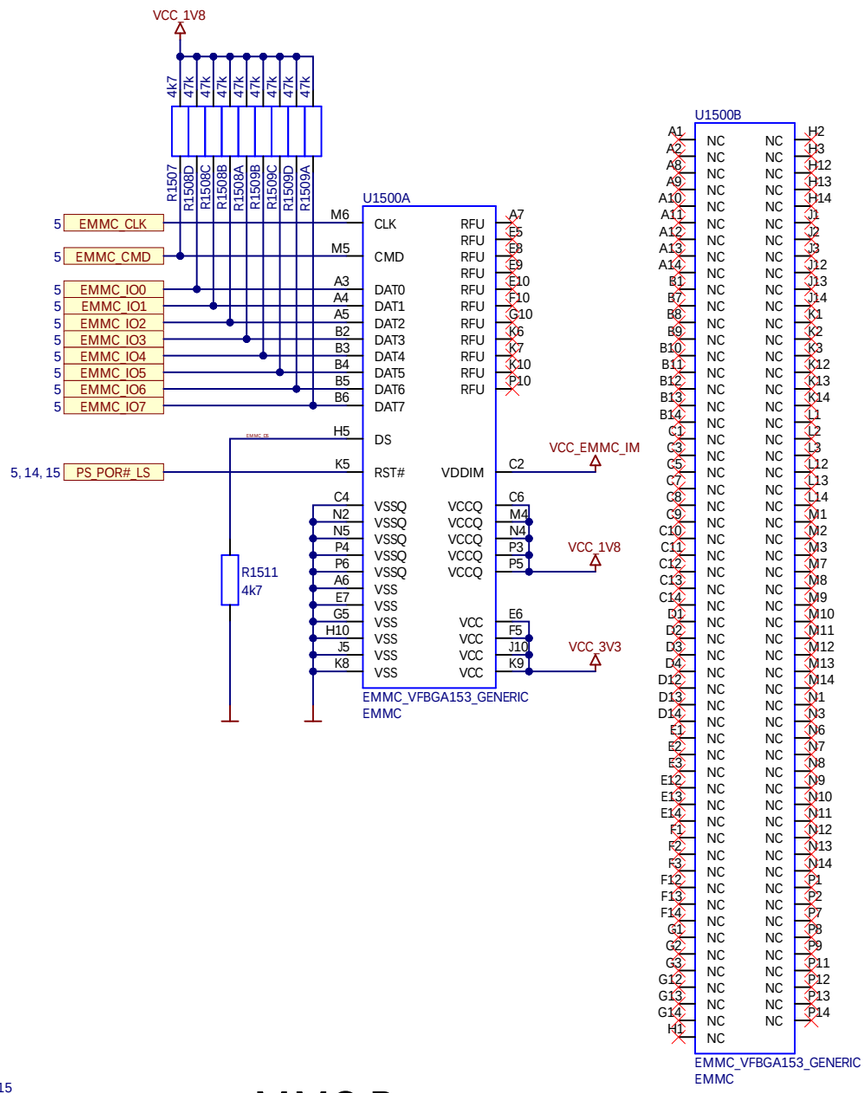

I2C Level Shifter

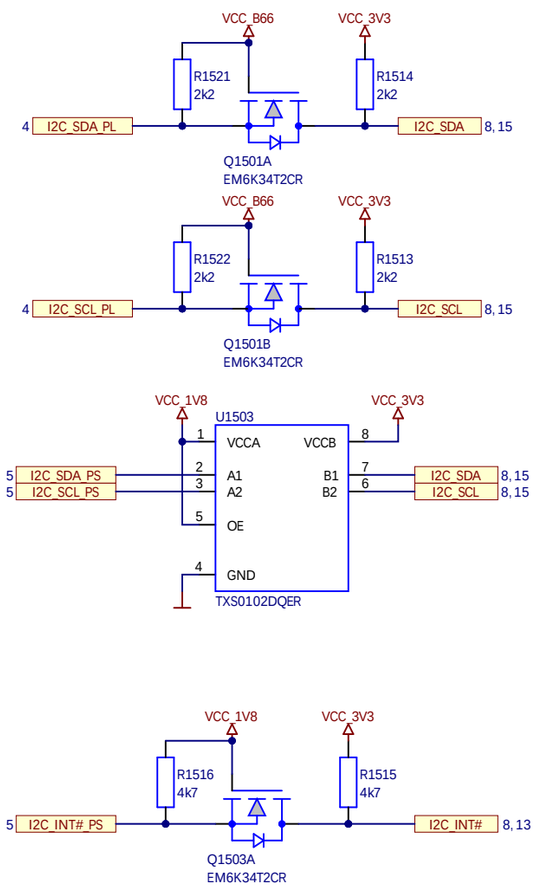

Quad SPI Power

not included in user schematics

Secure EEPROM

for Enclustra use only

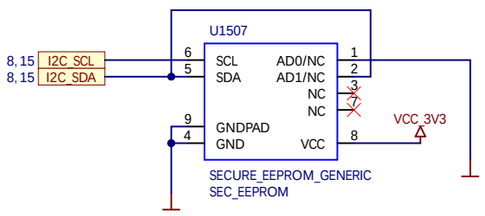

ATSHA204A-MAHDA-T I2C Address: 1 1 0 0 1 0 0 Rw
DS28CN01U-A00+ I2C Address: 1 0 1 1 1 0 0 Rw

eMMC Power

not included in user schematics

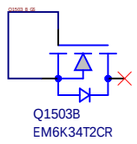

ENCLUSTRA FPGA SOLUTIONS	Project ME-XU6.PrjPCB	Sheet Name ME-XU6_P15_EMMC_QSPI_FLASH_LEVEL.SchDoc	Customer No 0000	Revision R2.0	DNE = Do Not Equip	Confidential
	Company Enclustra FPGA Solutions	Copyright © 2023 by Enclustra GmbH Switzerland	Project No 513	Designed RLOC	Date 11 Jul 2023	Sheet/sheets 15 / 21

Buck Converter

0.72/0.85/0.9V 9A 3%
not included in user schematics
FS=600kHz Vfb = 0.6V

Supported Voltage Ranges

Power Rail	Direction	Range	Tolerance
VCC_MOD	input	5-15V	±5%
VCC_CFG_MIO	input	1.8 - 3.3V	±5%
VCC_IO_BN [1]	input	1.2 - 3.3V	±5%
VCC_IO_BO [1]	input	1.2 - 3.3V	±5%
VCC_IO_BE_BF [1]	input	1.2 - 3.3V	±5%
VCC_IO_B64 [2]	input	1.0 - 1.8V	±5%
VCC_IO_B65	input	1.0 - 1.8V	±5%
VCC_IO_B66	input	1.0 - 1.8V	±5%
VCC_BAT [3]	input	2.0 - 5.5V	-
VCC_1V8	output	1.8V	±5%
VCC_2V5	output	2.5V	±5%
VCC_3V3	output	3.3V	±5%

[1] When using VCC_IO_BN, VCC_IO_BO, VCC_IO_BE_BF at 3.3V, the tolerance is -5% +3%.
[2] When Module Connector Pins A88, A90, A92, A94 are used, VCC_IO_B64 ≥ 1.2 is required.
[3] Voltage range valid for LDO assembly option for VCC_BAT_FPGA (default assembly variant).

Buck Converter

3.3V 6A 5%
not included in user schematics
FS=800kHz Vfb = 0.6V

LDO 0.85V 0.5A

used for -1LE, -2LI, -3E speed grade SoC FPGAs
not included in user schematics

Buck Converter

1.2V 6A 3%
not included in user schematics
FS=800kHz Vfb = 0.6V

LDO 5.0V 0.15A

not included in user schematics

Buck Converter

0.85/0.9V 6A 3%
not included in user schematics
FS=800kHz Vfb = 0.6V

Buck Converter

0.9V 6A 3%
not included in user schematics
FS=800kHz Vfb = 0.6V

Power Sequencing

not included in user schematics

LDO 1.5V 10mA

not included in user schematics

DDR4 VREF Decoupling

not included in user schematics

DDR4 Termination Voltage Regulator

not included in user schematics

ENCLUSTRA FPGA SOLUTIONS	Project	ME-XU6.PrjPCB	Sheet Name	ME-XU6_P17_V_PSINT_0.9_VTT_1.5_SEQ.SchDoc	Customer No	0000	Revision	R2.0	DNE = Do Not Equip	Confidential
	Company	Enclustra FPGA Solutions	Copyright	© 2023 by Enclustra GmbH Switzerland	Project No	513	Designed	RLOC	Date 11 Jul 2023	Sheet/sheets 17 / 21

Buck Converter 1.8V

1.8V 3A 3%
not included in user schematics
Fs = 800kHz Vfb = 0.6V

LDO 2.5V 0.5A

not included in user schematics

Voltage Reference

not included in user schematics

Input Power Filter

not included in user schematics

Voltage Monitoring

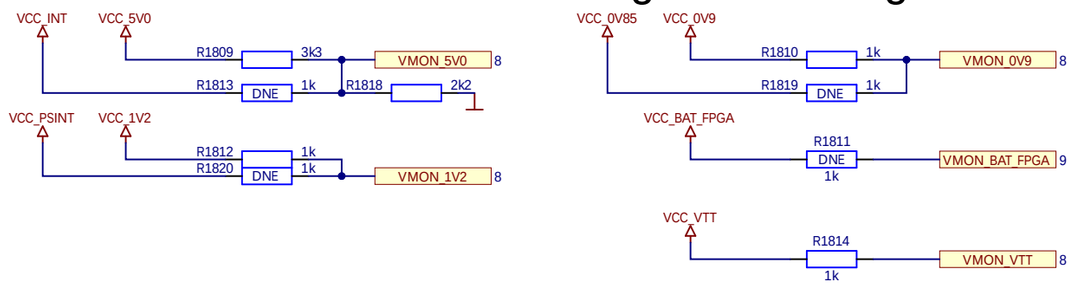

FPGA I/O Over-Voltage Protection

not included in user schematics

ENCLUSTRA FPGA SOLUTIONS	Project	ME-XU6.PrjPCB	Sheet Name	ME-XU6_P18_V_1.8_2.5_VMON_VREF.SchDoc	Customer No	0000	Revision	R2.0	DNE = Do Not Equip	Confidential
	Company	Enclustra FPGA Solutions	Copyright	© 2023 by Enclustra GmbH Switzerland	Project No	513	Designed	RLOC	Date 11 Jul 2023	Sheet/sheets 18 / 21

Module Mounting Holes M3

Z1902

ME-MOUNTING-HOLES_65.0X54.0_4P

Text and Logos

Z1903 ENCLUSTRA

Z1904 Mercury XU6

Z1900 QR 5x5

Z1901 EN000000 SN999999 EN-SN 6X15

Z1916 94V-0

Z1918

Z1912 E888888

Z1913 0000

Z1915 WW / YY

RoHS Z1919

Z1911 Pin-1 Mark Square 1mm

Z1917 Pin-1 Mark Square 1mm

PCB Fiducials

FID1900 FID1901 FID1902

FID1903 FID1904 FID1905

PCB

P1900

ME-XU6-B

ENCLUSTRA FPGA SOLUTIONS	Project ME-XU6.PrjPCB	Sheet Name ME-XU6_P19_MECHANICS.SchDoc	Customer No 0000	Revision R2.0	DNE = Do Not Equip	Confidential
	Company Enclustra FPGA Solutions	Copyright © 2023 by Enclustra GmbH Switzerland	Project No 513	Designed RLOC	Date 11 Jul 2023	Sheet/sheets 19 / 21

Component Options

FPGA	DDR4_TOP	DDR4_BOTTOM	DDR4PS_ECC	SEC_EEPROM	L0U68_9A	L0U68_6A	L2U2	L1U5	VCCINT_VCU	OTG
Part U200A:1 XCZU2CG-1SFVC784E EN102619	Part U1000A:1 NDQ46PFP-8NIT EN103227	Part U1100A:1 NDQ46PFP-8NIT EN103227		Part U1507A ATSHA204A-MAHDA-T EN100827	Part L1600A 0u68 EN100848	Part L1601A 0u68 EN102112	Part L1800A 2u2 EN102185	Part L1602A 1u5 EN102613	R607 or R606	R1412, R1414 or R1411, R1413, R1406, U1401, T1400
Part U200B:1 XCZU2EG-1SFVC784I EN101958	Part U1000B:1 MT40A1G16TB-062E IT:F EN105414	Part U1100B:1 MT40A1G16TB-062E IT:F EN105414	Part U1102B:1 MT40A1G16TB-062E IT:F EN105414	Part U1507B DS28CN01U-A00+ EN100280	Part L1600B 1u0 EN100436	Part L1601B 0u68 EN102445	Part L1800B 2u2 EN102208	Part L1602B 1u5 EN102207	C755, C756, C757, C758, C759, C760 or DNE	
Part U200C:1 XCZU3EG-2SFVC784I EN102020	Part U1000C:1 AS4C512M16D4-75BIN EN104035	Part U1100C:1 AS4C512M16D4-75BIN EN104035	Part U1102C:1 AS4C512M16D4-75BIN EN104035			Part L1700A 0u68 EN102112				
Part U200D:1 XCZU4CG-1SFVC784E EN102964	Part U1001A:1 NDQ46PFP-8NIT EN103227	Part U1101A:1 NDQ46PFP-8NIT EN103227				Part L1700B 0u68 EN102445				
Part U200E:1 XCZU4EV-1SFVC784I EN102021	Part U1001B:1 MT40A1G16TB-062E IT:F EN105414	Part U1101B:1 MT40A1G16TB-062E IT:F EN105414				Part L1701A 0u68 EN102112				
Part U200F:1 XCZU5EV-2SFVC784I EN101987	Part U1001C:1 AS4C512M16D4-75BIN EN104035	Part U1101C:1 AS4C512M16D4-75BIN EN104035				Part L1701B 0u68 EN102445				

Component Assembly

Enclustra Product	FPGA	DDR4_TOP	DDR4_BOTTOM	DDR4PS_ECC	SEC_EEPROM	L0U68_9A	L0U68_6A	L2U2	L1U5	VCCINT_VCU	OTG
Variant EN105287:0 ME-XU6-2CG-1E-D10H-R2.0	Option EN105287:1 FPGA EN102619	Option EN105287:2 DDR4_TOP EN103227	Option EN105287:3 DDR4_BOTTOM DNE	Option EN105287:4 DDR4PS_ECC DNE	Option EN105287:5 SEC_EEPROM EN100827	Option EN105287:6 L0U68_9A EN100848	Option EN105287:7 L0U68_6A EN102112	Option EN105287:8 L2U2 EN102185	Option EN105287:9 L1U5 EN102207	Option EN105287:10 VCCINT_VCU DNE	Option EN105287:11 OTG DNE
Variant EN105288:0 ME-XU6-2CG-1E-D10H-CN-R2.0	Option EN105288:1 FPGA EN102619	Option EN105288:2 DDR4_TOP EN103227	Option EN105288:3 DDR4_BOTTOM DNE	Option EN105288:4 DDR4PS_ECC DNE	Option EN105288:5 SEC_EEPROM EN100827	Option EN105288:6 L0U68_9A EN100848	Option EN105288:7 L0U68_6A EN102112	Option EN105288:8 L2U2 EN102185	Option EN105288:9 L1U5 EN102207	Option EN105288:10 VCCINT_VCU DNE	Option EN105288:11 OTG DNE
Variant EN105289:0 ME-XU6-2EG-1I-D13E-R2.0	Option EN105289:1 FPGA EN101958	Option EN105289:2 DDR4_TOP EN105414	Option EN105289:3 DDR4_BOTTOM EN105414	Option EN105289:4 DDR4PS_ECC EN105414	Option EN105289:5 SEC_EEPROM EN100827	Option EN105289:6 L0U68_9A EN100848	Option EN105289:7 L0U68_6A EN102112	Option EN105289:8 L2U2 EN102185	Option EN105289:9 L1U5 EN102207	Option EN105289:10 VCCINT_VCU DNE	Option EN105289:11 OTG DNE
Variant EN105307:0 ME-XU6-2EG-1I-D13E-CN-R2.0	Option EN105307:1 FPGA EN101958	Option EN105307:2 DDR4_TOP EN105414	Option EN105307:3 DDR4_BOTTOM EN105414	Option EN105307:4 DDR4PS_ECC EN105414	Option EN105307:5 SEC_EEPROM EN100827	Option EN105307:6 L0U68_9A EN100848	Option EN105307:7 L0U68_6A EN102112	Option EN105307:8 L2U2 EN102185	Option EN105307:9 L1U5 EN102207	Option EN105307:10 VCCINT_VCU DNE	Option EN105307:11 OTG DNE
Variant EN105290:0 ME-XU6-3EG-2I-D11-R2.0	Option EN105290:1 FPGA EN102020	Option EN105290:2 DDR4_TOP EN103227	Option EN105290:3 DDR4_BOTTOM EN103227	Option EN105290:4 DDR4PS_ECC DNE	Option EN105290:5 SEC_EEPROM EN100827	Option EN105290:6 L0U68_9A EN100848	Option EN105290:7 L0U68_6A EN102112	Option EN105290:8 L2U2 EN102185	Option EN105290:9 L1U5 EN102207	Option EN105290:10 VCCINT_VCU DNE	Option EN105290:11 OTG DNE
Variant EN105308:0 ME-XU6-3EG-2I-D11-CN-R2.0	Option EN105308:1 FPGA EN102020	Option EN105308:2 DDR4_TOP EN103227	Option EN105308:3 DDR4_BOTTOM EN103227	Option EN105308:4 DDR4PS_ECC DNE	Option EN105308:5 SEC_EEPROM EN100827	Option EN105308:6 L0U68_9A EN100848	Option EN105308:7 L0U68_6A EN102112	Option EN105308:8 L2U2 EN102185	Option EN105308:9 L1U5 EN102207	Option EN105308:10 VCCINT_VCU DNE	Option EN105308:11 OTG DNE
Variant EN105291:0 ME-XU6-4CG-1E-D12-R2.0	Option EN105291:1 FPGA EN102964	Option EN105291:2 DDR4_TOP EN104035	Option EN105291:3 DDR4_BOTTOM EN104035	Option EN105291:4 DDR4PS_ECC DNE	Option EN105291:5 SEC_EEPROM EN100827	Option EN105291:6 L0U68_9A EN100848	Option EN105291:7 L0U68_6A EN102112	Option EN105291:8 L2U2 EN102185	Option EN105291:9 L1U5 EN102207	Option EN105291:10 VCCINT_VCU DNE	Option EN105291:11 OTG DNE
Variant EN105309:0 ME-XU6-4CG-1E-D12-CN-R2.0	Option EN105309:1 FPGA EN102964	Option EN105309:2 DDR4_TOP EN104035	Option EN105309:3 DDR4_BOTTOM EN104035	Option EN105309:4 DDR4PS_ECC DNE	Option EN105309:5 SEC_EEPROM EN100827	Option EN105309:6 L0U68_9A EN100848	Option EN105309:7 L0U68_6A EN102112	Option EN105309:8 L2U2 EN102185	Option EN105309:9 L1U5 EN102207	Option EN105309:10 VCCINT_VCU DNE	Option EN105309:11 OTG DNE
Variant EN105293:0 ME-XU6-4EV-1I-D12-R2.0	Option EN105293:1 FPGA EN102021	Option EN105293:2 DDR4_TOP EN104035	Option EN105293:3 DDR4_BOTTOM EN104035	Option EN105293:4 DDR4PS_ECC DNE	Option EN105293:5 SEC_EEPROM EN100827	Option EN105293:6 L0U68_9A EN100848	Option EN105293:7 L0U68_6A EN102112	Option EN105293:8 L2U2 EN102185	Option EN105293:9 L1U5 EN102207	Option EN105293:10 VCCINT_VCU	Option EN105293:11 OTG DNE
Variant EN105294:0 ME-XU6-4EV-1I-D12E-R2.0	Option EN105294:1 FPGA EN102021	Option EN105294:2 DDR4_TOP EN104035	Option EN105294:3 DDR4_BOTTOM EN104035	Option EN105294:4 DDR4PS_ECC EN104035	Option EN105294:5 SEC_EEPROM EN100827	Option EN105294:6 L0U68_9A EN100848	Option EN105294:7 L0U68_6A EN102112	Option EN105294:8 L2U2 EN102185	Option EN105294:9 L1U5 EN102207	Option EN105294:10 VCCINT_VCU	Option EN105294:11 OTG DNE
Variant EN105310:0 ME-XU6-4EV-1I-D12-CN-R2.0	Option EN105310:1 FPGA EN102021	Option EN105310:2 DDR4_TOP EN104035	Option EN105310:3 DDR4_BOTTOM EN104035	Option EN105310:4 DDR4PS_ECC DNE	Option EN105310:5 SEC_EEPROM EN100827	Option EN105310:6 L0U68_9A EN100848	Option EN105310:7 L0U68_6A EN102112	Option EN105310:8 L2U2 EN102185	Option EN105310:9 L1U5 EN102207	Option EN105310:10 VCCINT_VCU	Option EN105310:11 OTG DNE
Variant EN105296:0 ME-XU6-5EV-2I-D12E-R2.0	Option EN105296:1 FPGA EN101987	Option EN105296:2 DDR4_TOP EN104035	Option EN105296:3 DDR4_BOTTOM EN104035	Option EN105296:4 DDR4PS_ECC EN104035	Option EN105296:5 SEC_EEPROM EN100827	Option EN105296:6 L0U68_9A EN100848	Option EN105296:7 L0U68_6A EN102112	Option EN105296:8 L2U2 EN102185	Option EN105296:9 L1U5 EN102207	Option EN105296:10 VCCINT_VCU	Option EN105296:11 OTG DNE
Variant EN105311:0 ME-XU6-5EV-2I-D12E-CN-R2.0	Option EN105311:1 FPGA EN101987	Option EN105311:2 DDR4_TOP EN104035	Option EN105311:3 DDR4_BOTTOM EN104035	Option EN105311:4 DDR4PS_ECC EN104035	Option EN105311:5 SEC_EEPROM EN100827	Option EN105311:6 L0U68_9A EN100848	Option EN105311:7 L0U68_6A EN102112	Option EN105311:8 L2U2 EN102185	Option EN105311:9 L1U5 EN102207	Option EN105311:10 VCCINT_VCU	Option EN105311:11 OTG DNE
Variant EN105295:0 ME-XU6-4EV-1I-D13E-R2.0	Option EN105295:1 FPGA EN102021	Option EN105295:2 DDR4_TOP EN105414	Option EN105295:3 DDR4_BOTTOM EN105414	Option EN105295:4 DDR4PS_ECC EN105414	Option EN105295:5 SEC_EEPROM EN100827	Option EN105295:6 L0U68_9A EN100848	Option EN105295:7 L0U68_6A EN102112	Option EN105295:8 L2U2 EN102185	Option EN105295:9 L1U5 EN102207	Option EN105295:10 VCCINT_VCU	Option EN105295:11 OTG DNE

Component Options

TD_UZQ	TD	EMMC	OSC27	OSC24	OSC33	OSC100
Part R1011A 0R EN101361 Part R1011B 240R EN101382 Part R1012A 0R EN101361 Part R1012B 240R EN101382 Part R1105A 0R EN101361 Part R1105B 240R EN101382 Part R1106A 0R EN101361 Part R1106B 240R EN101382 Part R1107A 0R EN101361 Part R1107B 240R EN101382 0R for normal, 240R for TD	R1019, R1020 or R1021 DNE for normal, assembled for TD	Part U1500A:1 KLMAG1JETD-B041 EN103298 Part U1500B:1 FEMDRW016G-88A43 EN104303	Part Y1205A ASEMPC-27.000MHZ-LR-T EN101608 Part Y1205B ASEMPC-27.000MHZ-XR-T EN101609 Part Y1205C DSC1123CI1-027.0000 EN103019	Part Y1206A O 24,0-JO22-B-1V3-1-T1-LF EN104125	Part Y1202A DSC1001CI2-033.3330 EN104103	Part Y1200A DSC1123CI2-100.0000 EN103018

Component Assembly

TD_UZQ	TD	EMMC	OSC27	OSC24	OSC33	OSC100
Option EN105287:12 TD_UZQ EN101361	Option EN105287:13 TD DNE	Option EN105287:14 EMMC EN103298	Option EN105287:15 OSC27 EN101608	Option EN105287:16 OSC24 EN104125	Option EN105287:17 OSC33 EN104103	Option EN105287:18 OSC100 EN103018
Option EN105288:12 TD_UZQ EN101361	Option EN105288:13 TD DNE	Option EN105288:14 EMMC EN103298	Option EN105288:15 OSC27 EN101608	Option EN105288:16 OSC24 EN104125	Option EN105288:17 OSC33 EN104103	Option EN105288:18 OSC100 EN103018
Option EN105289:12 TD_UZQ EN101361	Option EN105289:13 TD DNE	Option EN105289:14 EMMC EN104303	Option EN105289:15 OSC27 EN101608	Option EN105289:16 OSC24 EN104125	Option EN105289:17 OSC33 EN104103	Option EN105289:18 OSC100 EN103018
Option EN105307:12 TD_UZQ EN101361	Option EN105307:13 TD DNE	Option EN105307:14 EMMC EN104303	Option EN105307:15 OSC27 EN101608	Option EN105307:16 OSC24 EN104125	Option EN105307:17 OSC33 EN104103	Option EN105307:18 OSC100 EN103018
Option EN105290:12 TD_UZQ EN101361	Option EN105290:13 TD DNE	Option EN105290:14 EMMC EN104303	Option EN105290:15 OSC27 EN101608	Option EN105290:16 OSC24 EN104125	Option EN105290:17 OSC33 EN104103	Option EN105290:18 OSC100 EN103018
Option EN105308:12 TD_UZQ EN101361	Option EN105308:13 TD DNE	Option EN105308:14 EMMC EN104303	Option EN105308:15 OSC27 EN101608	Option EN105308:16 OSC24 EN104125	Option EN105308:17 OSC33 EN104103	Option EN105308:18 OSC100 EN103018
Option EN105291:12 TD_UZQ EN101361	Option EN105291:13 TD DNE	Option EN105291:14 EMMC EN103298	Option EN105291:15 OSC27 EN101608	Option EN105291:16 OSC24 EN104125	Option EN105291:17 OSC33 EN104103	Option EN105291:18 OSC100 EN103018
Option EN105309:12 TD_UZQ EN101361	Option EN105309:13 TD DNE	Option EN105309:14 EMMC EN103298	Option EN105309:15 OSC27 EN101608	Option EN105309:16 OSC24 EN104125	Option EN105309:17 OSC33 EN104103	Option EN105309:18 OSC100 EN103018
Option EN105293:12 TD_UZQ EN101361	Option EN105293:13 TD DNE	Option EN105293:14 EMMC EN104303	Option EN105293:15 OSC27 EN101608	Option EN105293:16 OSC24 EN104125	Option EN105293:17 OSC33 EN104103	Option EN105293:18 OSC100 EN103018
Option EN105294:12 TD_UZQ EN101361	Option EN105294:13 TD DNE	Option EN105294:14 EMMC EN104303	Option EN105294:15 OSC27 EN101608	Option EN105294:16 OSC24 EN104125	Option EN105294:17 OSC33 EN104103	Option EN105294:18 OSC100 EN103018
Option EN105310:12 TD_UZQ EN101361	Option EN105310:13 TD DNE	Option EN105310:14 EMMC EN104303	Option EN105310:15 OSC27 EN101608	Option EN105310:16 OSC24 EN104125	Option EN105310:17 OSC33 EN104103	Option EN105310:18 OSC100 EN103018
Option EN105296:12 TD_UZQ EN101361	Option EN105296:13 TD DNE	Option EN105296:14 EMMC EN104303	Option EN105296:15 OSC27 EN101608	Option EN105296:16 OSC24 EN104125	Option EN105296:17 OSC33 EN104103	Option EN105296:18 OSC100 EN103018
Option EN105311:12 TD_UZQ EN101361	Option EN105311:13 TD DNE	Option EN105311:14 EMMC EN104303	Option EN105311:15 OSC27 EN101608	Option EN105311:16 OSC24 EN104125	Option EN105311:17 OSC33 EN104103	Option EN105311:18 OSC100 EN103018
Option EN105295:12 TD_UZQ EN101361	Option EN105295:13 TD DNE	Option EN105295:14 EMMC EN104303	Option EN105295:15 OSC27 EN101608	Option EN105295:16 OSC24 EN104125	Option EN105295:17 OSC33 EN104103	Option EN105295:18 OSC100 EN103018