Enclustra User Schematic

Mercury+ XU61 Revision 1.1

Disclaimer

User schematics do not include proprietary Enclustra design elements, such as power supply circuits.
These circuits use optimized designs which are extremely compact and remain proprietary to Enclustra.
The user manual provides all necessary information to use the module and its interfaces.

User schematics are provided after purchase of Enclustra hardware, and may also be provided in certain cases before purchase, to assist in product evaluation.
No part of the schematics may be copied or modified without written permission from Enclustra.

Full schematics, including a full bill-of-materials, may be available through the purchase of a hardware licence for the product in question.
Please contact Enclustra Sales for more information.

Note: DNE = Do Not Equip (parts not equipped by default)

© 2024 by Enclustra GmbH Switzerland

Mercury+ XU61 SoC Module

Revision 1.1

Sheet 01: Cover
Sheet 02: SoC FPGA Configuration
Sheet 03: SoC FPGA HD Banks | User LEDs
Sheet 04: SoC FPGA HP | MGT Banks
Sheet 05: SoC FPGA PS Banks
Sheet 06: SoC FPGA Power
Sheet 07: Power Decoupling
Sheet 08: Module Connectors A | B
Sheet 09: Module Connector C
Sheet 10: PS LPDDR4 SDRAM
Sheet 11: Oscillators
Sheet 12: Gigabit Ethernet PHY
Sheet 13: USB 2.0 PHYs
Sheet 14: eMMC | QSPI | TPM | EEPROM
Sheet 15: Power 3.3V | 1.8V | PSINT | 0.9V | 5V
Sheet 16: Power 1.2V | 1.1V | INT | 2.5V | 1.5V
Sheet 17: Voltage Monitoring | Protection
Sheet 18: Mechanics
Sheet 19: Component Assembly
Sheet 20: Component Assembly

Boot Mode Selection

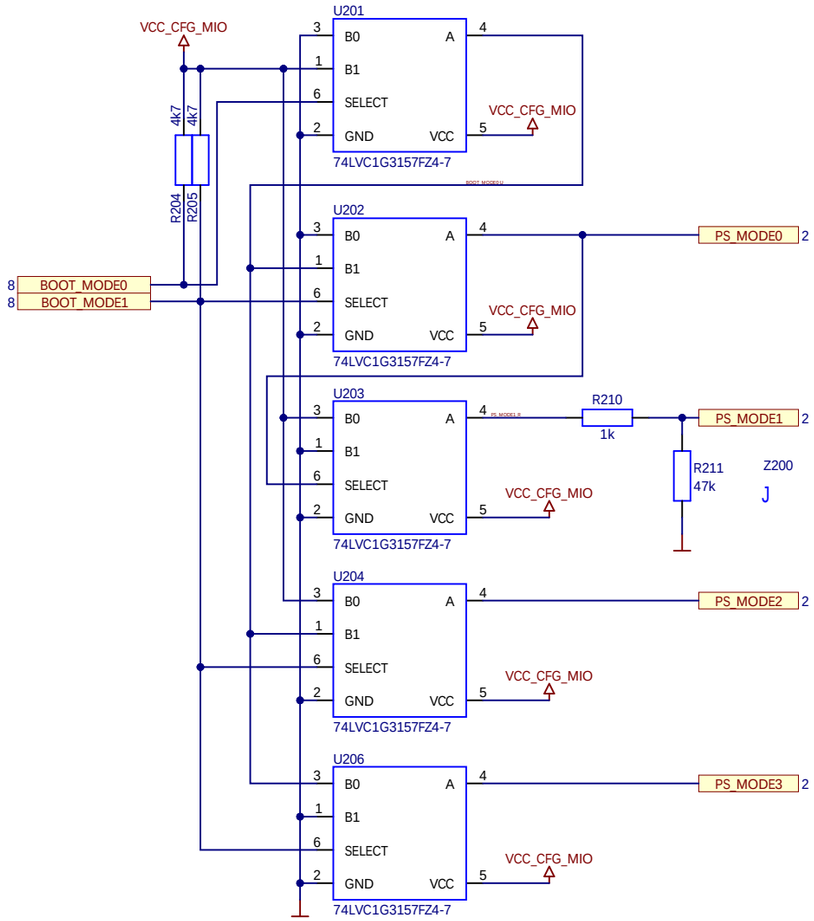

Miscellaneous

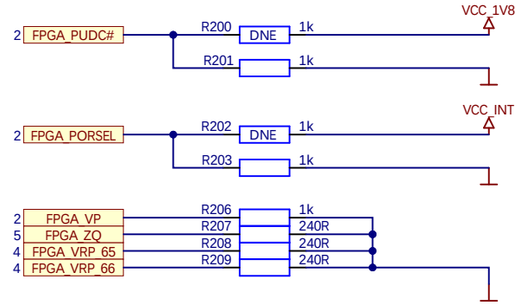

Boot Modes

	Boot Mode		Mode Straps	Configuration	
	1	0	PS_MODE	PL Boot	PS Boot
eMMC Mode	0	0	0110	PS	eMMC
SD Mode LS not supported	0	1	1110	PS	SDIO with level shifter
QSPI Mode	1	0	0010	PS	QSPI
SD Mode default	1	1	0101	PS	SDIO
JTAG Mode (*)	1	0	0000	PS	JTAG

SD Mode LS mode may be supported in the future. It requires VCC_CFG_MIO of 1.8V.

(*) Short-circuit R211 during boot while selecting QSPI mode to enable JTAG mode.

PCIe Reset

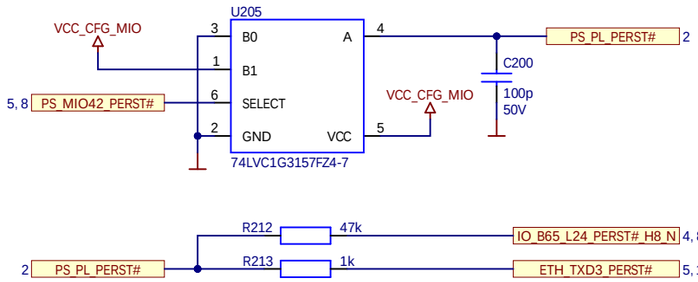

FPGA Configuration

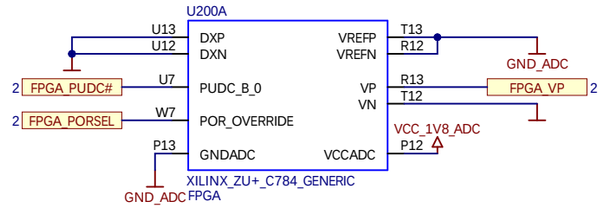

FPGA PS Configuration

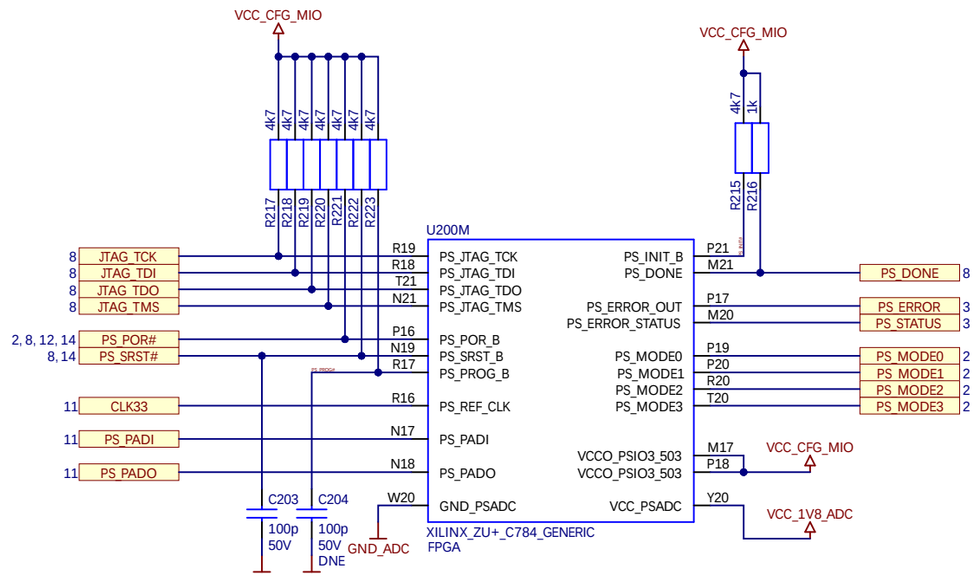

Reset Circuit

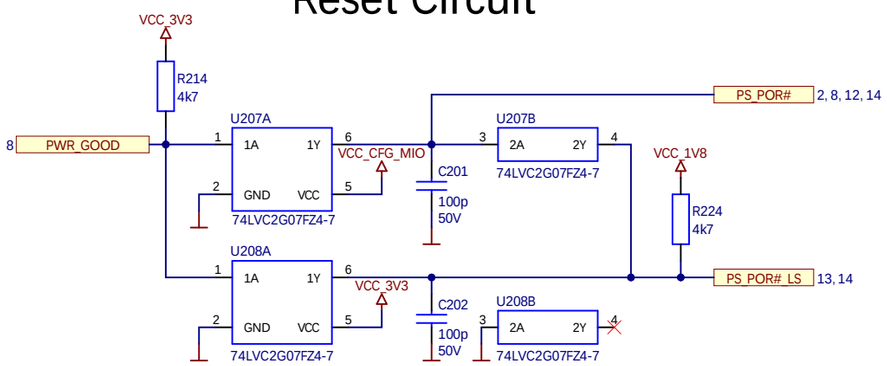

FPGA HD Bank 25 (ZU2/3), 45 (ZU4/5), NC (ZU1)

Not available on products with ZU1 devices. NC banks are not bonded.
VCCO = VCC_IO_BE_BF

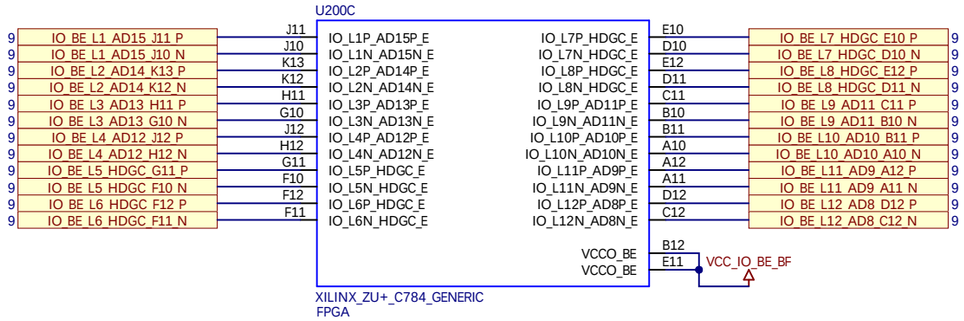

FPGA HD Bank 44 (ZU1/2/3) or 43 (ZU4/5)

VCCO = VCC_IO_BO

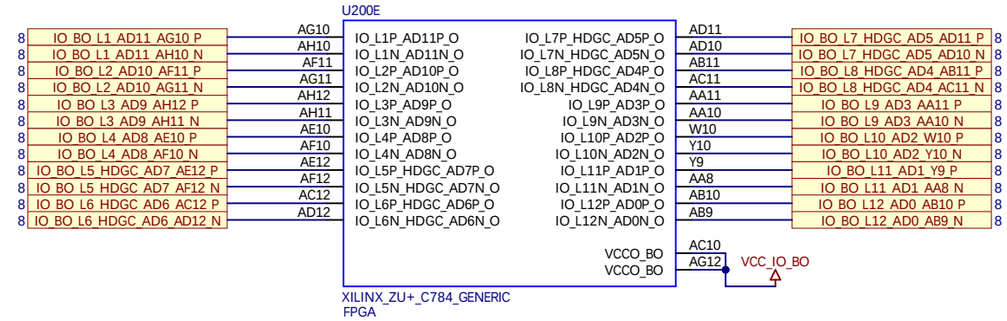

FPGA HD Bank 26 (ZU2/3), 46 (ZU4/5), NC (ZU1)

Not available on products with ZU1 devices. NC banks are not bonded.
VCCO = VCC_IO_BE_BF

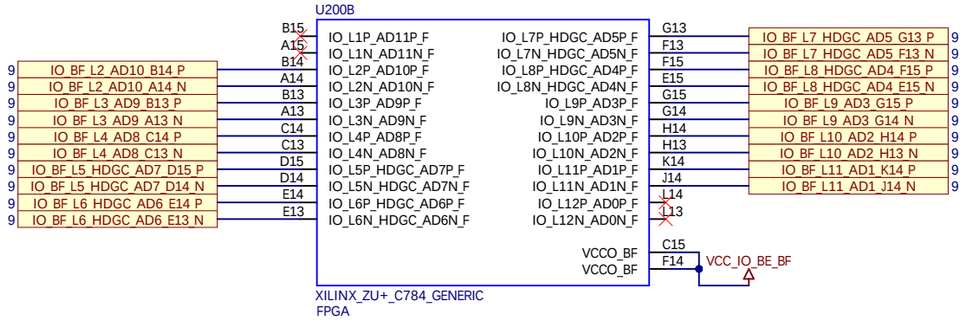

FPGA HD Bank 24 (ZU2/3), 44 (ZU4/5), NC(ZU1)

Not available on products with ZU1 devices. NC banks are not bonded.
VCCO = VCC_IO_BN

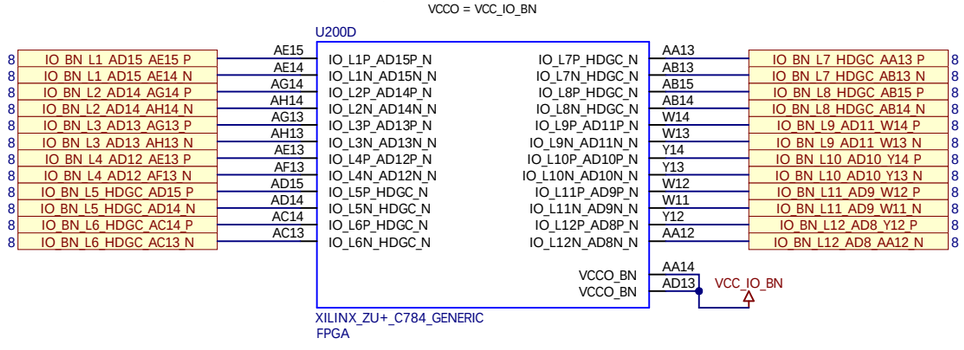

FPGA Reference Voltages

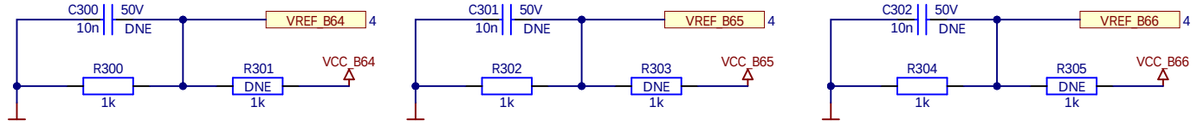

User LEDs

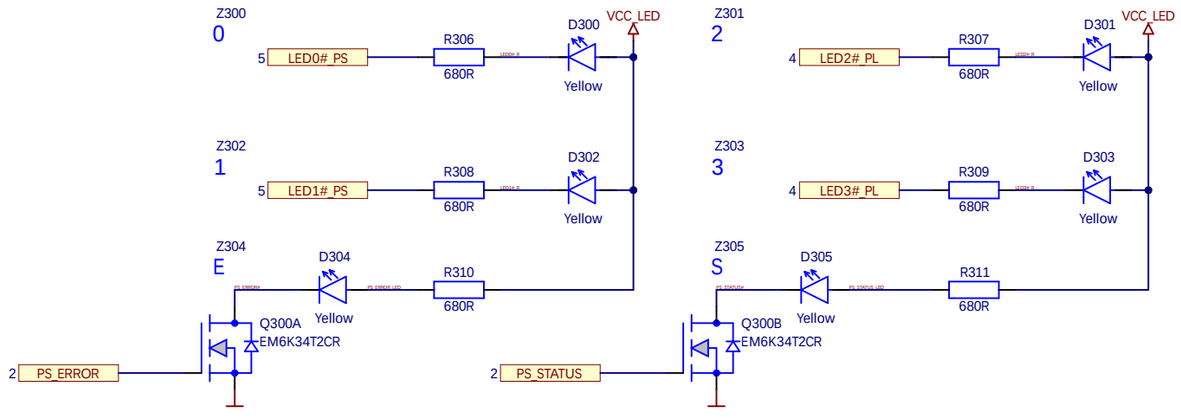

LED Power

not included in user schematics

ENCLUSTRA FPGA SOLUTIONS	Project ME-XU61.PrjPCB	Sheet Name ME-XU61_P03_FPGA_HD_BANKS_LEDS.SchDoc	Customer No 0000	Revision R1.1	DNE = Do Not Equip	Confidential
	Company Enclustra GmbH Switzerland	Copyright © 2024 by Enclustra GmbH Switzerland	Project No 509	Designed CCIR	Date 16 Feb 2024	Sheet/sheets 3 / 20

FPGA HP Bank 64

VCCO = VCC_IO_B64 (max 1.8V)

U200H

Net	Pin	Function	Pin	Net
IO_B64_L1_AC9_P	AC9	IO_L1P_T0L0D_64	IO_L13P_T2L0Q_GC_64	AD5 / IO_B64_L13_GC_AD5_P
IO_B64_L1_AD9_N	AD9	IO_L1N_T0L1D_64	IO_L13N_T2L1Q_GC_64	AD4 / IO_B64_L13_GC_AD4_N
IO_B64_L2_AE9_P	AE9	IO_L2P_T0L2_64	IO_L14P_T2L2_GC_64	AC4 / IO_B64_L14_GC_AC4_P
IO_B64_L2_AE8_N	AE8	IO_L2N_T0L3_64	IO_L14N_T2L3_GC_64	AC3 / IO_B64_L14_GC_AC3_N
IO_B64_L3_AD15_AB8_P	AB8	IO_L3P_T0L4_AD15P_64	IO_L15P_T2L4_AD11P_64	AB4 / IO_B64_L15_AD11_AB4_P
IO_B64_L3_AD15_AC8_N	AC8	IO_L3N_T0L5_AD15N_64	IO_L15N_T2L5_AD11N_64	AB3 / IO_B64_L15_AD11_AB3_N
IO_B64_L4_AD7_AD7_P	AD7	IO_L4P_T0U6D_AD7P_64	IO_L16P_T2U6Q_AD3P_64	AD2 / IO_B64_L16_AD3_AD2_P
IO_B64_L4_AD7_AE7_N	AE7	IO_L4N_T0U7D_AD7N_64	IO_L16N_T2U7Q_AD3N_64	AD1 / IO_B64_L16_AD3_AD1_N
IO_B64_L5_AD14_AB7_P	AB7	IO_L5P_T0U8_AD14P_64	IO_L17P_T2U8_AD10P_64	AB2 / IO_B64_L17_AD10_AB2_P
IO_B64_L5_AD14_AC7_N	AC7	IO_L5N_T0U9_AD14N_64	IO_L17N_T2U9_AD10N_64	AC2 / IO_B64_L17_AD10_AC2_N
IO_B64_L6_AD6_AB6_P	AB6	IO_L6P_T0U10_AD6P_64	IO_L18P_T2U10_AD2P_64	AB1 / IO_B64_L18_AD2_AB1_P
IO_B64_L6_AD6_AC6_N	AC6	IO_L6N_T0U11_AD6N_64	IO_L18N_T2U11_AD2N_64	AC1 / IO_B64_L18_AD2_AC1_N
IO_B64_AD6	AD6	IO_T0U12_VRP_64	IO_T2U12_64	AB5 / IO_B64_AB5
IO_B64_L7_AD13_AG9_P	AG9	IO_L7P_T1L0Q_AD13P_64	IO_L19P_T3L0D_AD9P_64	AG4 / IO_B64_L19_AD9_AG4_P
IO_B64_L7_AD13_AH9_N	AH9	IO_L7N_T1L1Q_AD13N_64	IO_L19N_T3L1D_AD9N_64	AH4 / IO_B64_L19_AD9_AH4_N
IO_B64_L8_AD5_AF8_P	AF8	IO_L8P_T1L2_AD5P_64	IO_L20P_T3L2_AD1P_64	AG3 / IO_B64_L20_AD1_AG3_P
IO_B64_L8_AD5_AG8_N	AG8	IO_L8N_T1L3_AD5N_64	IO_L20N_T3L3_AD1N_64	AH3 / IO_B64_L20_AD1_AH3_N
IO_B64_L9_AD12_AH8_P	AH8	IO_L9P_T1L4_AD12P_64	IO_L21P_T3L4_AD8P_64	AE3 / IO_B64_L21_AD8_AE3_P
IO_B64_L9_AD12_AH7_N	AH7	IO_L9N_T1L5_AD12N_64	IO_L21N_T3L5_AD8N_64	AF3 / IO_B64_L21_AD8_AF3_N
IO_B64_L10_AD4_AG6_P	AG6	IO_L10P_T1U6Q_AD4P_64	IO_L22P_T3U6D_AD0P_64	AE2 / IO_B64_L22_AD0_AE2_P
IO_B64_L10_AD4_AG5_N	AG5	IO_L10N_T1U7Q_AD4N_64	IO_L22N_T3U7D_AD0N_64	AF2 / IO_B64_L22_AD0_AF2_N
IO_B64_L11_GC_AF7_P	AF7	IO_L11P_T1U8_GC_64	IO_L23P_T3U8_64	AH2 / IO_B64_L23_AH2_P
IO_B64_L11_GC_AF6_N	AF6	IO_L11N_T1U9_GC_64	IO_L23N_T3U9_64	AH1 / IO_B64_L23_AH1_N
IO_B64_L12_GC_AE5_P	AE5	IO_L12P_T1U10_GC_64	IO_L24P_T3U10_64	AF1 / IO_B64_L24_AF1_P
IO_B64_L12_GC_AF5_N	AF5	IO_L12N_T1U11_GC_64	IO_L24N_T3U11_64	AG1 / IO_B64_L24_AG1_N
IO_B64_AH6	AH6	IO_T1U12_64	IO_T3U12_64	AE4 / IO_B64_AE4
			VCCO_64	AC5 / AD8 / AG7 — VCC_B64
VREF_B64	AA7	VREF_64	VCCO_64	

XILINX_ZU+_C784_GENERIC
FPGA

FPGA HP Bank 66

VCCO = VCC_IO_B66 (max 1.8V)

U200F

Net	Pin	Function	Pin	Net
IO_B66_L1_G1_P	G1	IO_L1P_T0L0D_66	IO_L13P_T2L0Q_GC_66	D7 / IO_B66_L13_GC_D7_P
IO_B66_L1_F1_N	F1	IO_L1N_T0L1D_66	IO_L13N_T2L1Q_GC_66	D6 / IO_B66_L13_GC_D6_N
IO_B66_L2_E1_P	E1	IO_L2P_T0L2_66	IO_L14P_T2L2_GC_66	E5 / IO_B66_L14_GC_E5_P
IO_B66_L2_D1_N	D1	IO_L2N_T0L3_66	IO_L14N_T2L3_GC_66	D5 / IO_B66_L14_GC_D5_N
IO_B66_L3_AD15_F2_P	F2	IO_L3P_T0L4_AD15P_66	IO_L15P_T2L4_AD11P_66	G6 / IO_B66_L15_AD11_G6_P
IO_B66_L3_AD15_E2_N	E2	IO_L3N_T0L5_AD15N_66	IO_L15N_T2L5_AD11N_66	F6 / IO_B66_L15_AD11_F6_N
IO_B66_L4_AD7_G3_P	G3	IO_L4P_T0U6D_AD7P_66	IO_L16P_T2U6Q_AD3P_66	G8 / IO_B66_L16_AD3_G8_P
IO_B66_L4_AD7_F3_N	F3	IO_L4N_T0U7D_AD7N_66	IO_L16N_T2U7Q_AD3N_66	F7 / IO_B66_L16_AD3_F7_N
IO_B66_L5_AD14_E4_P	E4	IO_L5P_T0U8_AD14P_66	IO_L17P_T2U8_AD10P_66	F8 / IO_B66_L17_AD10_F8_P
IO_B66_L5_AD14_E3_N	E3	IO_L5N_T0U9_AD14N_66	IO_L17N_T2U9_AD10N_66	E8 / IO_B66_L17_AD10_E8_N
IO_B66_L6_AD6_G5_P	G5	IO_L6P_T0U10_AD6P_66	IO_L18P_T2U10_AD2P_66	E9 / IO_B66_L18_AD2_E9_P
IO_B66_L6_AD6_F5_N	F5	IO_L6N_T0U11_AD6N_66	IO_L18N_T2U11_AD2N_66	D9 / IO_B66_L18_AD2_D9_N
FPGA_VRP_66	G4	IO_T0U12_VRP_66	IO_T2U12_66	E7 / LED3#_PL
IO_B66_L7_AD13_C1_P	C1	IO_L7P_T1L0Q_AD13P_66	IO_L19P_T3L0D_AD9P_66	B5 / IO_B66_L19_AD9_B5_P
IO_B66_L7_AD13_B1_N	B1	IO_L7N_T1L1Q_AD13N_66	IO_L19N_T3L1D_AD9N_66	A5 / IO_B66_L19_AD9_A5_N
IO_B66_L8_AD5_A2_P	A2	IO_L8P_T1L2_AD5P_66	IO_L20P_T3L2_AD1P_66	C6 / IO_B66_L20_AD1_C6_P
IO_B66_L8_AD5_A1_N	A1	IO_L8N_T1L3_AD5N_66	IO_L20N_T3L3_AD1N_66	B6 / IO_B66_L20_AD1_B6_N
IO_B66_L9_AD12_B3_P	B3	IO_L9P_T1L4_AD12P_66	IO_L21P_T3L4_AD8P_66	A7 / IO_B66_L21_AD8_A7_P
IO_B66_L9_AD12_A3_N	A3	IO_L9N_T1L5_AD12N_66	IO_L21N_T3L5_AD8N_66	A6 / IO_B66_L21_AD8_A6_N
IO_B66_L10_AD4_B4_P	B4	IO_L10P_T1U6Q_AD4P_66	IO_L22P_T3U6D_AD0P_66	C8 / IO_B66_L22_AD0_C8_P
IO_B66_L10_AD4_A4_N	A4	IO_L10N_T1U7Q_AD4N_66	IO_L22N_T3U7D_AD0N_66	B8 / IO_B66_L22_AD0_B8_N
IO_B66_L11_GC_D4_P	D4	IO_L11P_T1U8_GC_66	IO_L23P_T3U8_66	A9 / IO_B66_L23_A9_P
IO_B66_L11_GC_C4_N	C4	IO_L11N_T1U9_GC_66	IO_L23N_T3U9_66	A8 / IO_B66_L23_A8_N
IO_B66_L12_GC_C3_P	C3	IO_L12P_T1U10_GC_66	IO_L24P_T3U10_66	C9 / IO_B66_L24_C9_P
IO_B66_L12_GC_C2_N	C2	IO_L12N_T1U11_GC_66	IO_L24N_T3U11_66	B9 / IO_B66_L24_B9_N
I2C_SDA_PL	D2	IO_T1U12_66	IO_T3U12_66	C7 / I2C_SCL_PL
			VCCO_66	B7 / D3 / E6 — VCC_B66
VREF_B66	G9	VREF_66	VCCO_66	

XILINX_ZU+_C784_GENERIC
FPGA

FPGA HP Bank 65

VCCO = VCC_IO_B65 (max 1.8V)

U200G

Net	Pin	Function	Pin	Net
IO_B65_L1_W8_P	W8	IO_L1P_T0L0D_65	IO_L13P_T2L0Q_GC_65	L7 / IO_B65_L13_GC_L7_P
IO_B65_L1_Y8_N	Y8	IO_L1N_T0L1D_65	IO_L13N_T2L1Q_GC_65	L6 / IO_B65_L13_GC_L6_N
IO_B65_L2_U9_P	U9	IO_L2P_T0L2_65	IO_L14P_T2L2_GC_65	M6 / IO_B65_L14_GC_M6_P
IO_B65_L2_V9_N	V9	IO_L2N_T0L3_65	IO_L14N_T2L3_GC_65	L5 / IO_B65_L14_GC_L5_N
IO_B65_L3_AD15_U8_P	U8	IO_L3P_T0L4_AD15P_65	IO_L15P_T2L4_AD11P_65	N7 / IO_B65_L15_AD11_N7_P
IO_B65_L3_AD15_V8_N	V8	IO_L3N_T0L5_AD15N_65	IO_L15N_T2L5_AD11N_65	N6 / IO_B65_L15_AD11_N6_N
IO_B65_L4_AD7_ALERT_R8_P	R8	IO_L4P_T0U6D_AD7P_ALERT_65	IO_L16P_T2U6Q_AD3P_65	P7 / IO_B65_L16_AD3_P7_P
IO_B65_L4_AD7_T8_N	T8	IO_L4N_T0U7D_AD7N_65	IO_L16N_T2U7Q_AD3N_65	P6 / IO_B65_L16_AD3_P6_N
IO_B65_L5_AD14_R7_P	R7	IO_L5P_T0U8_AD14P_65	IO_L17P_T2U8_AD10P_65	N9 / IO_B65_L17_AD10_N9_P
IO_B65_L5_AD14_T7_N	T7	IO_L5N_T0U9_AD14N_65	IO_L17N_T2U9_AD10N_65	N8 / IO_B65_L17_AD10_N8_N
IO_B65_L6_AD6_R6_P	R6	IO_L6P_T0U10_AD6P_65	IO_L18P_T2U10_AD2P_65	M8 / IO_B65_L18_AD2_M8_P
IO_B65_L6_AD6_T6_N	T6	IO_L6N_T0U11_AD6N_65	IO_L18N_T2U11_AD2N_65	L8 / IO_B65_L18_AD2_L8_N
FPGA_VRP_65	W9	IO_T0U12_VRP_65	IO_T2U12_65	P9 / PWR_SYNC_BC0_LS
IO_B65_L7_AD13_L1_P	L1	IO_L7P_T1L0Q_AD13P_65	IO_L19P_T3L0D_AD9P_65	J5 / IO_B65_L19_AD9_J5_P
IO_B65_L7_AD13_K1_N	K1	IO_L7N_T1L1Q_AD13N_65	IO_L19N_T3L1D_AD9N_65	J4 / IO_B65_L19_AD9_J4_N
IO_B65_L8_AD5_J1_P	J1	IO_L8P_T1L2_AD5P_65	IO_L20P_T3L2_AD1P_65	J6 / IO_B65_L20_AD1_J6_P
IO_B65_L8_AD5_H1_N	H1	IO_L8N_T1L3_AD5N_65	IO_L20N_T3L3_AD1N_65	H6 / IO_B65_L20_AD1_H6_N
IO_B65_L9_AD12_K2_P	K2	IO_L9P_T1L4_AD12P_65	IO_L21P_T3L4_AD8P_65	J7 / IO_B65_L21_AD8_J7_P
IO_B65_L9_AD12_J2_N	J2	IO_L9N_T1L5_AD12N_65	IO_L21N_T3L5_AD8N_65	H7 / IO_B65_L21_AD8_H7_N
IO_B65_L10_AD4_H4_P	H4	IO_L10P_T1U6Q_AD4P_65	IO_L22P_T3U6D_AD0P_65	K8 / IO_B65_L22_AD0_K8_P
IO_B65_L10_AD4_H3_N	H3	IO_L10N_T1U7Q_AD4N_65	IO_L22N_T3U7D_AD0N_65	K7 / IO_B65_L22_AD0_K7_N
IO_B65_L11_GC_K4_P	K4	IO_L11P_T1U8_GC_65	IO_L23P_T3U8_SCLK_65	K9 / IO_B65_L23_SCLK_K9_P
IO_B65_L11_GC_K3_N	K3	IO_L11N_T1U9_GC_65	IO_L23N_T3U9_65	J9 / IO_B65_L23_J9_N
IO_B65_L12_GC_L3_P	L3	IO_L12P_T1U10_GC_65	IO_L24P_T3U10_SDA_65	H9 / IO_B65_L24_SDA_H9_P
IO_B65_L12_GC_L2_N	L2	IO_L12N_T1U11_GC_65	IO_L24N_T3U11_PERSTN_65	H8 / IO_B65_L24_PERST#_H8_N (2, 8)
LED2#_PL	H2	IO_T1U12_65	IO_T3U12_65	K5 / PWR_SYNC_BC1_LS
			VCCO_65	H5 / J3 / L4 — VCC_B65
VREF_B65	R9	VREF_65	VCCO_65	

XILINX_ZU+_C784_GENERIC
FPGA

FPGA MGT Bank 224 (ZU4/5), NC (ZU1/2/3)

U200I

Net	Pin	Function	Pin	Net
MGT_B224_REFCLK0_Y6_P	Y6	MGTREFCLK0P_224	MGTREFCLK1P_224	V6 / MGT_B224_REFCLK1_V6_P
MGT_B224_REFCLK0_Y5_N	Y5	MGTREFCLK0N_224	MGTREFCLK1N_224	V5 / MGT_B224_REFCLK1_V5_N
MGT_B224_RX0_Y2_P	Y2	MGTHRXP0_224	MGTHTXP0_224	W4 / MGT_B224_TX0_W4_P
MGT_B224_RX0_Y1_N	Y1	MGTHRXN0_224	MGTHTXN0_224	W3 / MGT_B224_TX0_W3_N
MGT_B224_RX1_V2_P	V2	MGTHRXP1_224	MGTHTXP1_224	U4 / MGT_B224_TX1_U4_P
MGT_B224_RX1_V1_N	V1	MGTHRXN1_224	MGTHTXN1_224	U3 / MGT_B224_TX1_U3_N
MGT_B224_RX2_T2_P	T2	MGTHRXP2_224	MGTHTXP2_224	R4 / MGT_B224_TX2_R4_P
MGT_B224_RX2_T1_N	T1	MGTHRXN2_224	MGTHTXN2_224	R3 / MGT_B224_TX2_R3_N
MGT_B224_RX3_P2_P	P2	MGTHRXP3_224	MGTHTXP3_224	N4 / MGT_B224_TX3_N4_P
MGT_B224_RX3_P1_N	P1	MGTHRXN3_224	MGTHTXN3_224	N3 / MGT_B224_TX3_N3_N

XILINX_ZU+_C784_GENERIC
FPGA

FPGA PS GTR Bank 505

U200R

Net	Pin	Function	Pin	Net
MGTPS_REFCLK0_F23_P	F23	PS_MGTREFCLK0P_505	PS_MGTREFCLK2P_505	C21 / CLK100_GTR_P
MGTPS_REFCLK0_F24_N	F24	PS_MGTREFCLK0N_505	PS_MGTREFCLK2N_505	C22 / CLK100_GTR_N
MGTPS_REFCLK1_E21_P	E21	PS_MGTREFCLK1P_505	PS_MGTREFCLK3P_505	A21 / CLK135_GTR_P
MGTPS_REFCLK1_E22_N	E22	PS_MGTREFCLK1N_505	PS_MGTREFCLK3N_505	A22 / CLK135_GTR_N
MGTPS_RX0_F27_P	F27	PS_MGTRRXP0_505	PS_MGTRTXP0_505	E25 / MGTPS_TX0_E25_P
MGTPS_RX0_F28_N	F28	PS_MGTRRXN0_505	PS_MGTRTXN0_505	E26 / MGTPS_TX0_E26_N
MGTPS_RX1_D27_P	D27	PS_MGTRRXP1_505	PS_MGTRTXP1_505	D23 / MGTPS_TX1_D23_P
MGTPS_RX1_D28_N	D28	PS_MGTRRXN1_505	PS_MGTRTXN1_505	D24 / MGTPS_TX1_D24_N
MGTPS_RX2_B27_P	B27	PS_MGTRRXP2_505	PS_MGTRTXP2_505	C25 / MGTPS_TX2_C25_P
MGTPS_RX2_B28_N	B28	PS_MGTRRXN2_505	PS_MGTRTXN2_505	C26 / MGTPS_TX2_C26_N
MGTPS_RX3_A25_P	A25	PS_MGTRRXP3_505	PS_MGTRTXP3_505	B23 / MGTPS_TX3_B23_P
MGTPS_RX3_A26_N	A26	PS_MGTRRXN3_505	PS_MGTRTXN3_505	B24 / MGTPS_TX3_B24_N

XILINX_ZU+_C784_GENERIC
FPGA

Buck Converter Sync Level Shifter

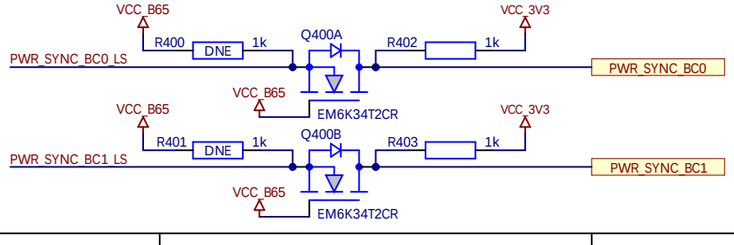

Project ME-XU61.PrjPCB	Sheet Name ME-XU61_P04_FPGA_HP_MGT_BANKS.SchDoc	Customer No 0000	Revision R1.1	DNE = Do Not Equip	Confidential
Company Enclustra GmbH Switzerland	Copyright © 2024 by Enclustra GmbH Switzerland	Project No 509	Designed CCIR	Date 16 Feb 2024	Sheet/sheets 4 / 20

FPGA PS DDR Bank 504

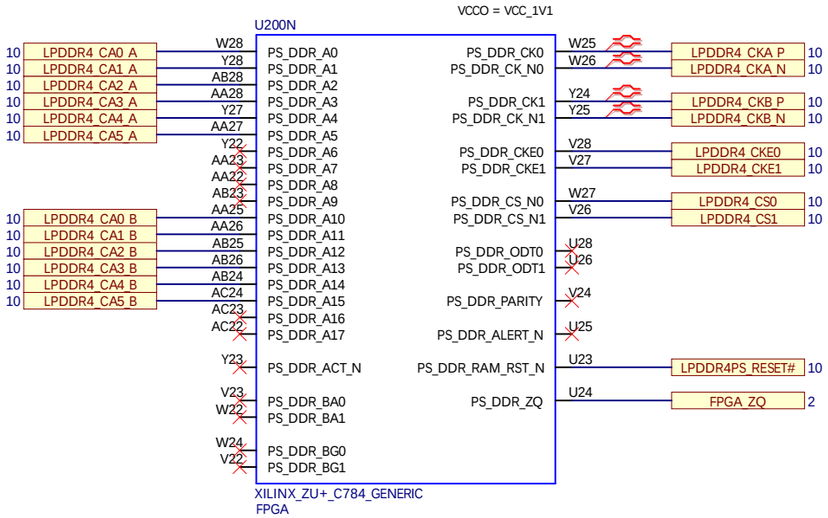

FPGA PS Bank 500

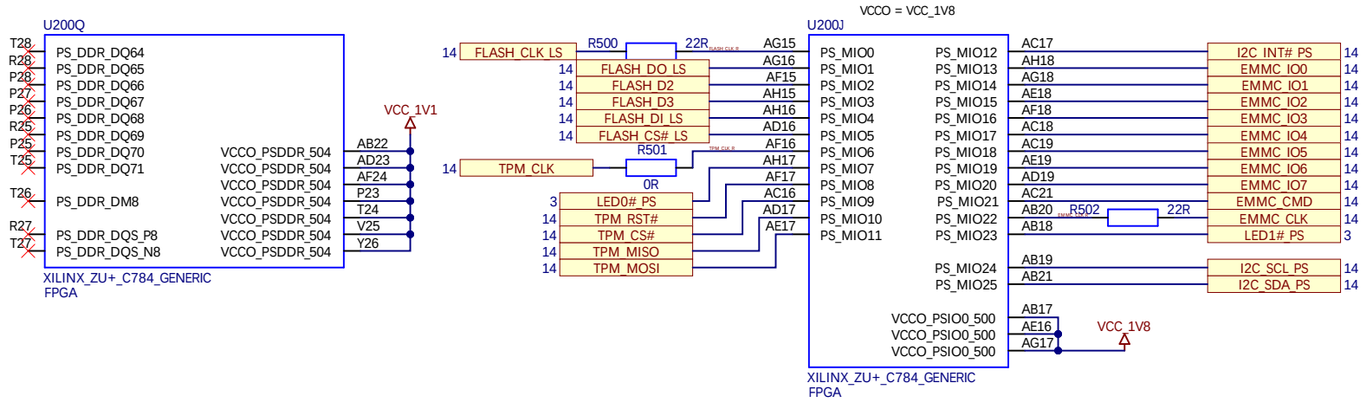

FPGA PS Bank 501

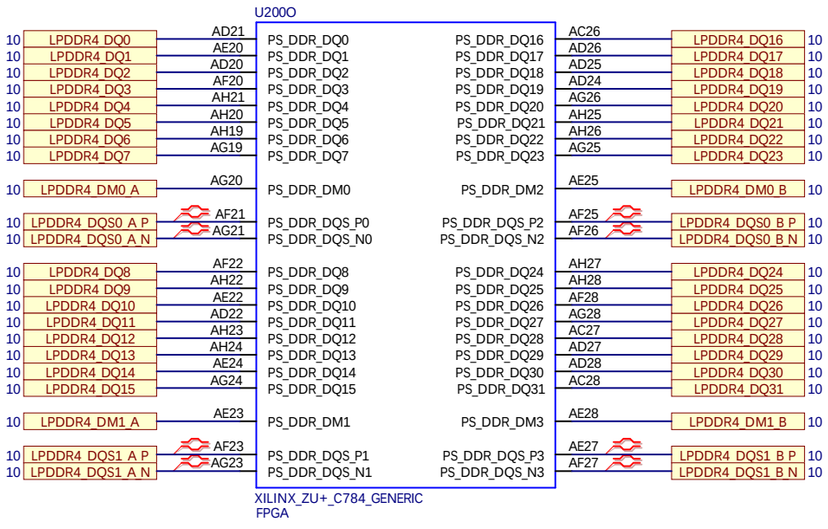

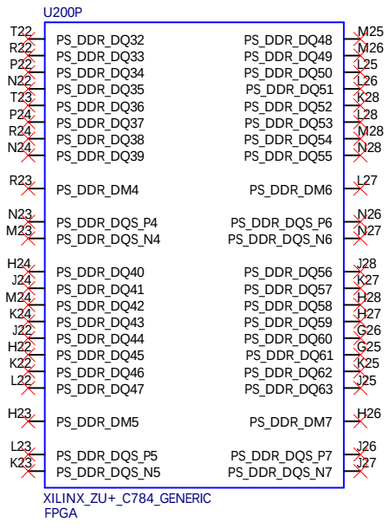

FPGA PS Bank 502

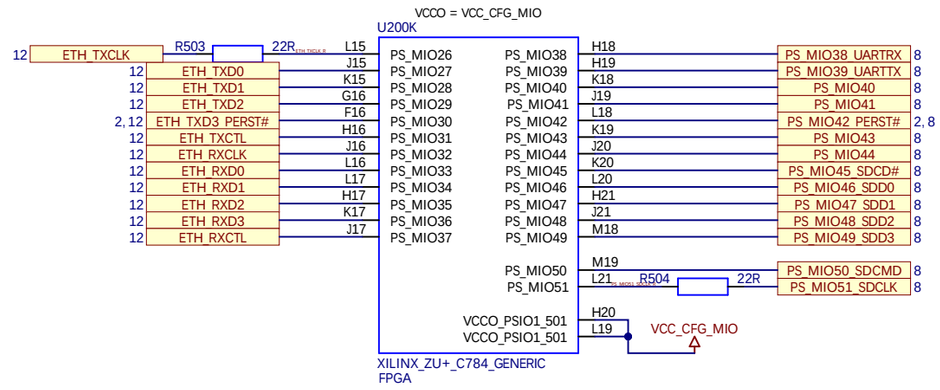

FPGA PS Bank 502

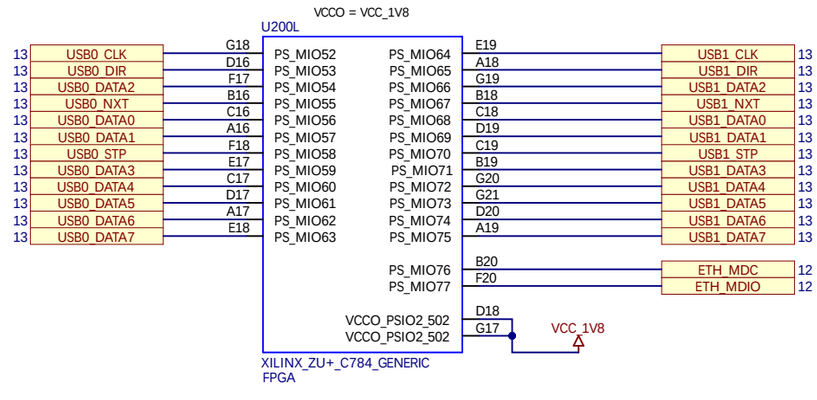

ENCLUSTRA FPGA SOLUTIONS	Project ME-XU61.PrjPCB	Sheet Name ME-XU61_P05_FPGA_PS_BANKS.SchDoc	Customer No 0000	Revision R1.1	DNE = Do Not Equip	Confidential
	Company Enclustra GmbH Switzerland	Copyright © 2024 by Enclustra GmbH Switzerland	Project No 509	Designed CCIR	Date 16 Feb 2024	Sheet/sheets 5 / 20

FPGA Ground

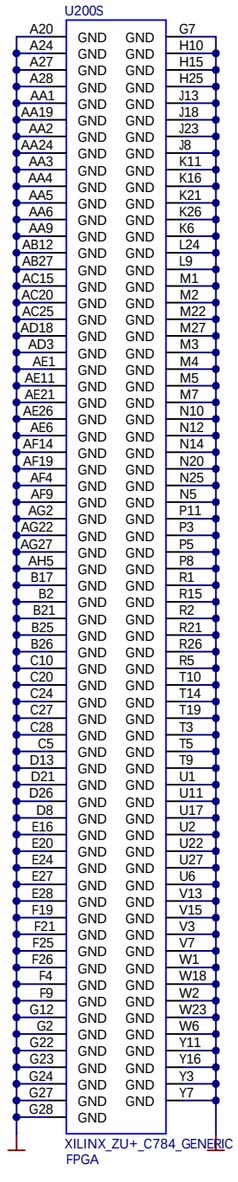

FPGA Power

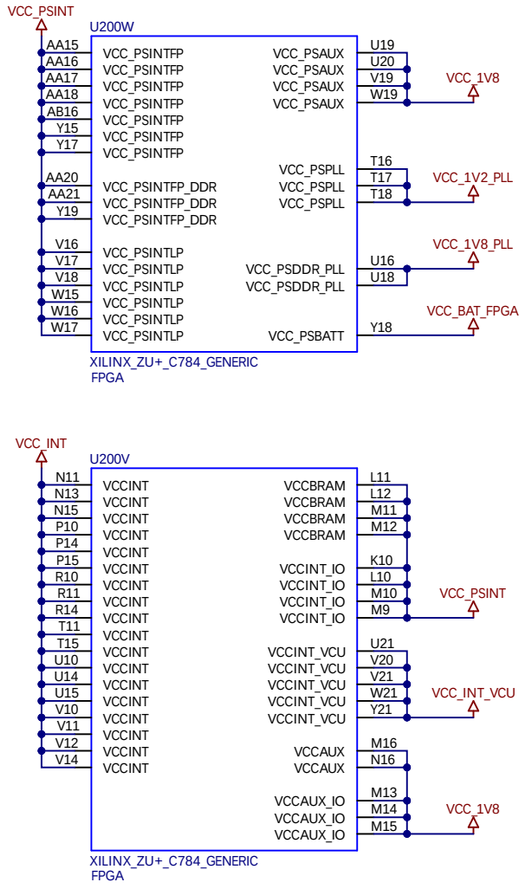

FPGA MGT Power

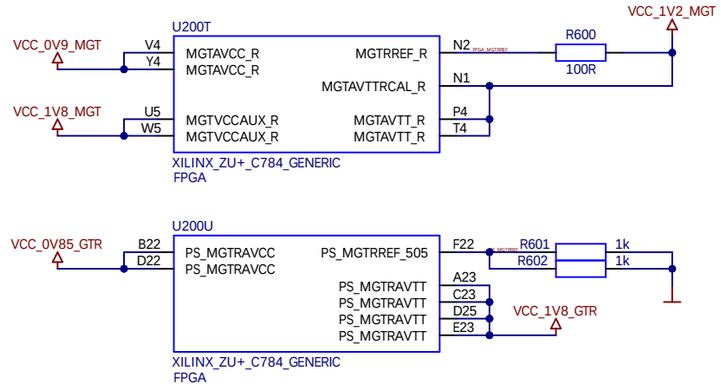

FPGA ADC Power Filter

not included in user schematics

FPGA VCU Power Selection

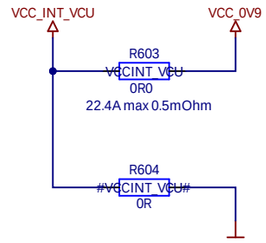

FPGA MGT Power Filters

not included in user schematics

FPGA PS Power Filters

not included in user schematics

ENCLUSTRA FPGA SOLUTIONS	Project ME-XU61.PrjPCB	Sheet Name ME-XU61_P06_FPGA_POWER.SchDoc	Customer No 0000	Revision R1.1	DNE = Do Not Equip	Confidential
	Company Enclustra GmbH Switzerland	Copyright © 2024 by Enclustra GmbH Switzerland	Project No 509	Designed CCIR	Date 16 Feb 2024	Sheet/sheets 6 / 20

FPGA Decoupling

not included in user schematics

Board Decoupling

not included in user schematics

ENCLUSTRA FPGA SOLUTIONS	Project ME-XU61.PrjPCB	Sheet Name ME-XU61_P07_POWER_DECOUPLING.SchDoc	Customer No 0000	Revision R1.1	DNE = Do Not Equip	Confidential
	Company Enclustra GmbH Switzerland	Copyright © 2024 by Enclustra GmbH Switzerland	Project No 509	Designed CCIR	Date 16 Feb 2024	Sheet/sheets 7 / 20

Module Connector A

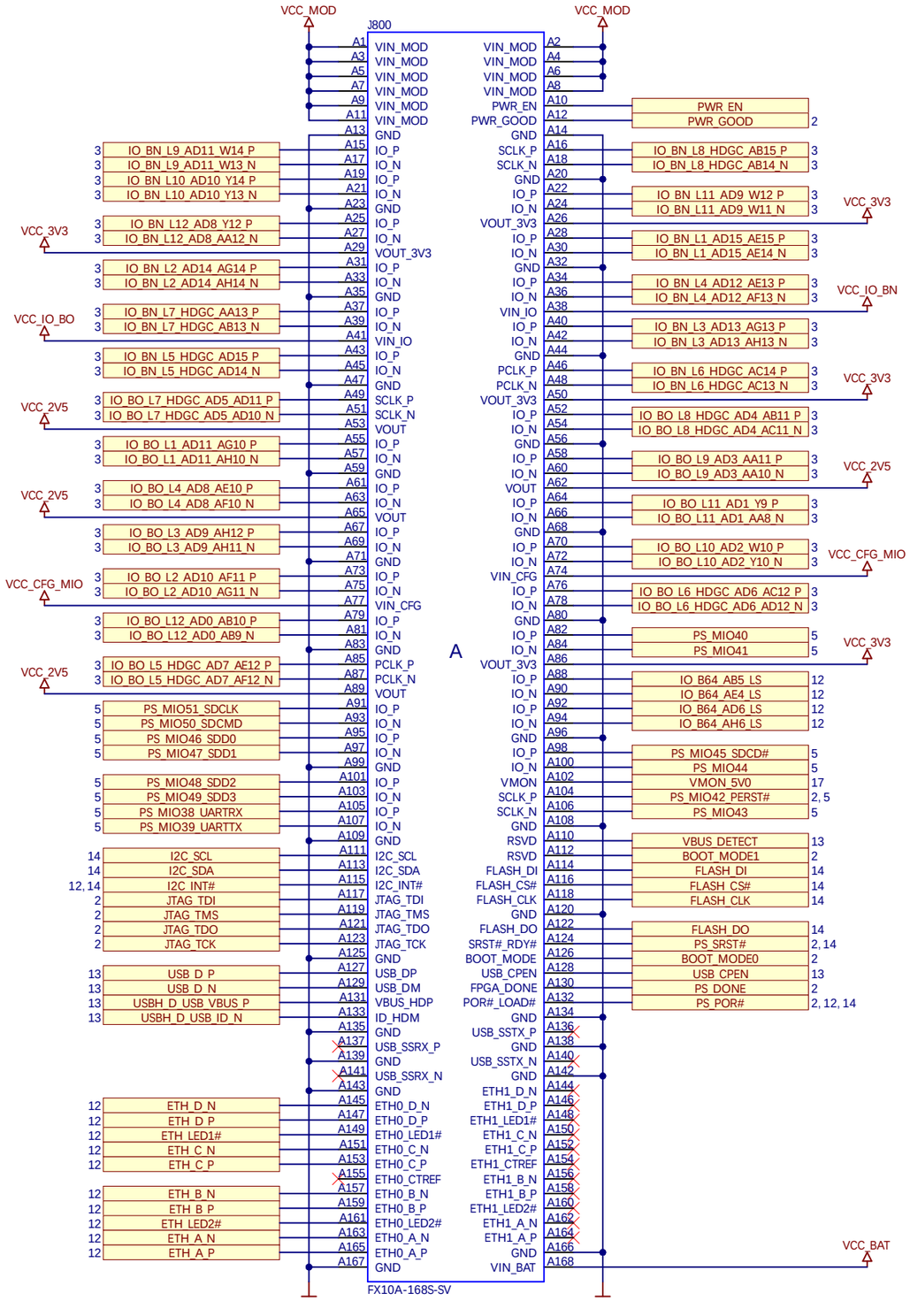

Module Connector B

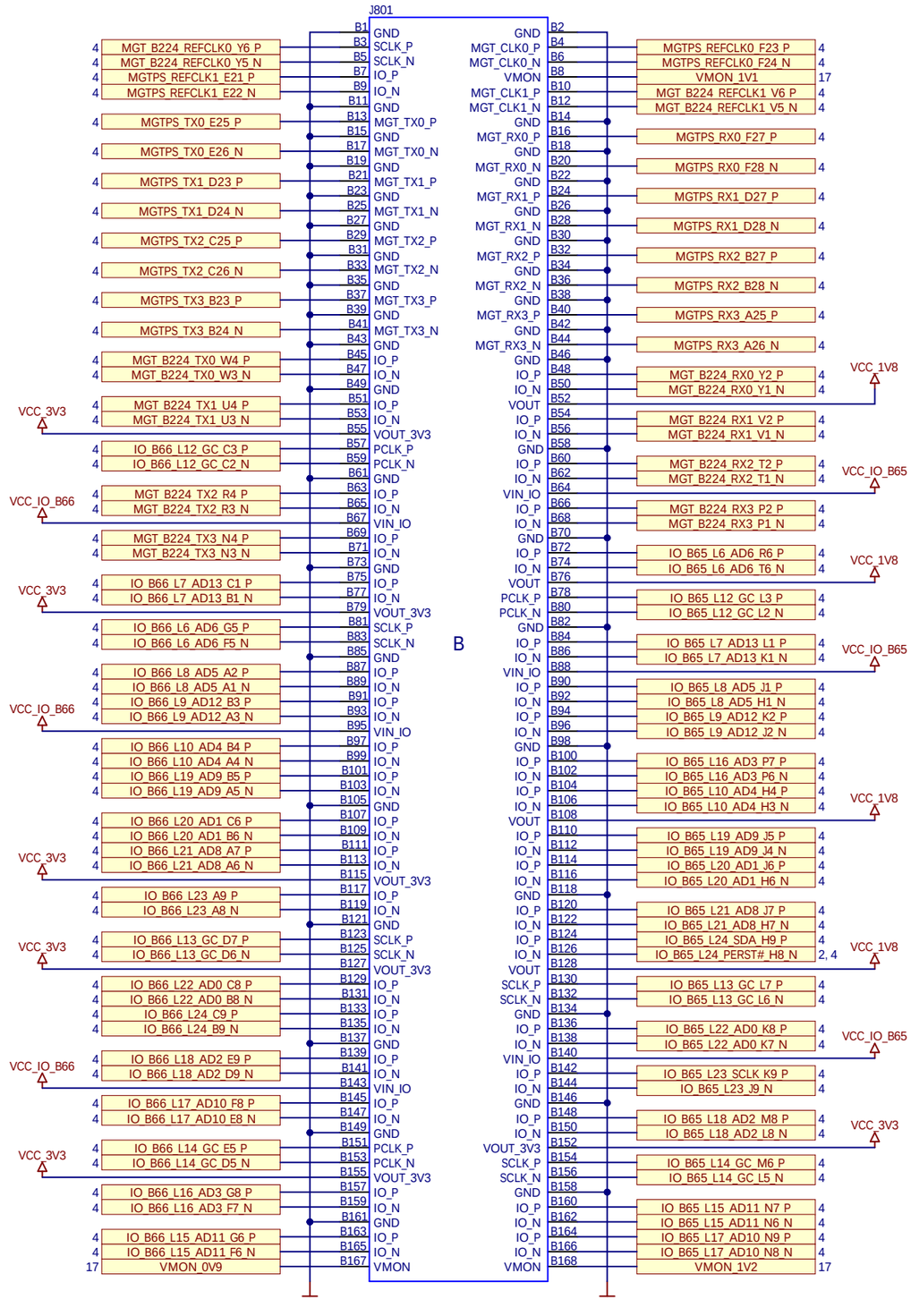

ENCLUSTRA FPGA SOLUTIONS	Project ME-XU61.PrjPCB	Sheet Name ME-XU61_P08_MOD_CON_A_B.SchDoc	Customer No 0000	Revision R1.1	DNE = Do Not Equip	Confidential
	Company Enclustra GmbH Switzerland	Copyright © 2024 by Enclustra GmbH Switzerland	Project No 509	Designed CCIR	Date 16 Feb 2024	Sheet/sheets 8 / 20

Module Connector C

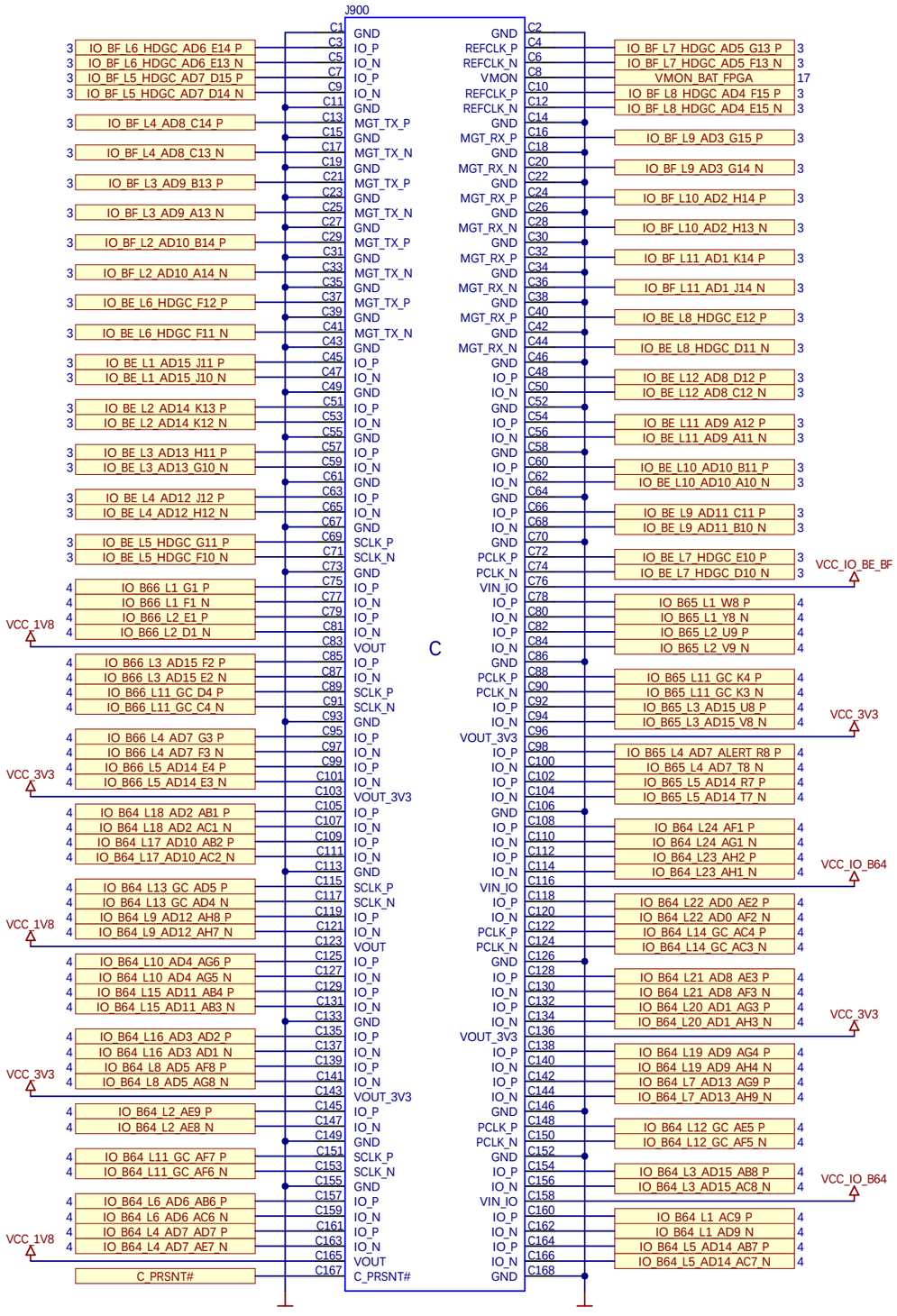

IO Voltage Generation

when C connector is not present on base board

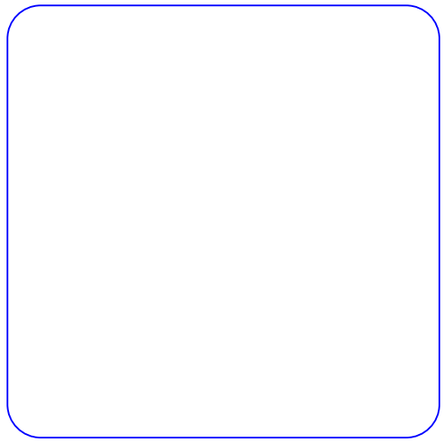

Project ME-XU61.PrjPCB	Sheet Name ME-XU61_P09_MOD_CON_C.SchDoc	Customer No 0000	Revision R1.1	DNE = Do Not Equip	Confidential
Company Enclustra GmbH Switzerland	Copyright © 2024 by Enclustra GmbH Switzerland	Project No 509	Designed CCIR	Date 16 Feb 2024	Sheet/sheets 9 / 20

PS LPDDR4 SDRAM

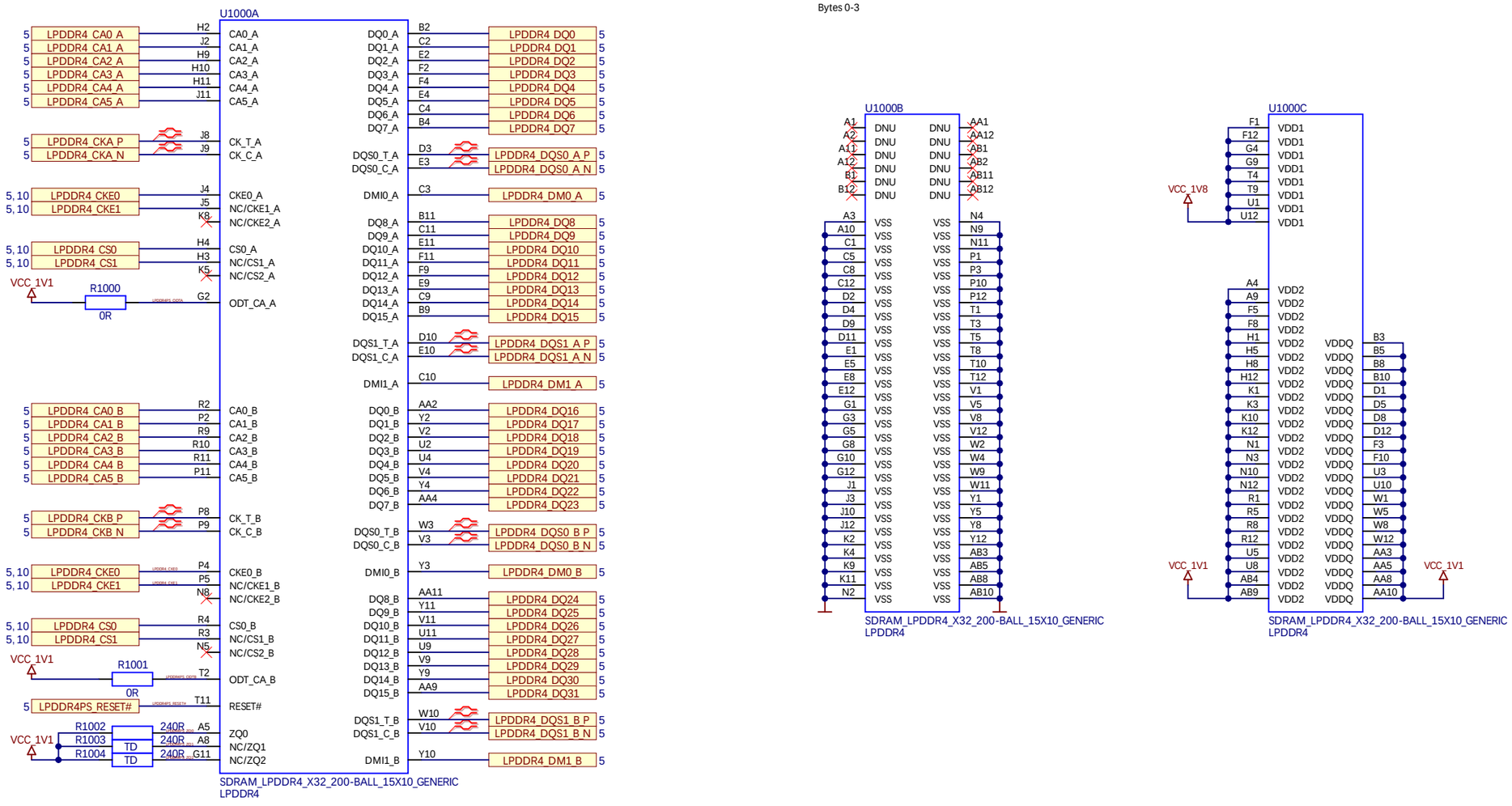

PS LPDDR4 Decoupling

not included in user schematics

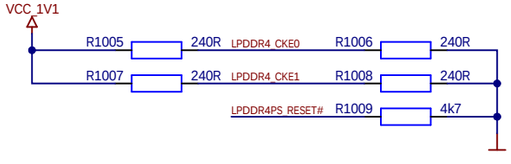

ENCLUSTRA FPGA SOLUTIONS	Project ME-XU61.PrjPCB	Sheet Name ME-XU61_P10_LPDDR4_SDRAM.SchDoc	Customer No 0000	Revision R1.1	DNE = Do Not Equip	Confidential
	Company Enclustra GmbH Switzerland	Copyright © 2024 by Enclustra GmbH Switzerland	Project No 509	Designed CCIR	Date 16 Feb 2024	Sheet/sheets 10 / 20

PS 33.3 MHz Oscillator

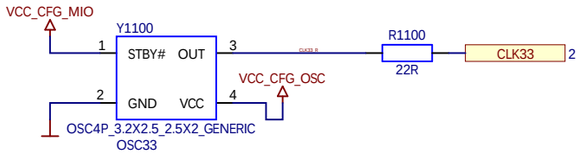

GTR 100 MHz Oscillator

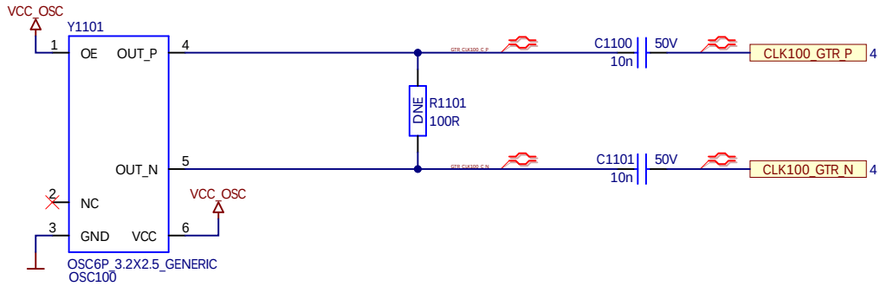

USB 24 MHz Oscillator

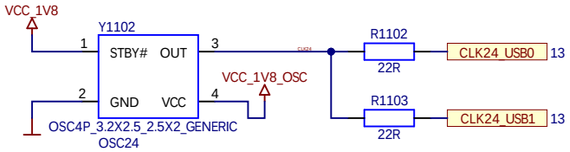

GTR 135 MHz Oscillator

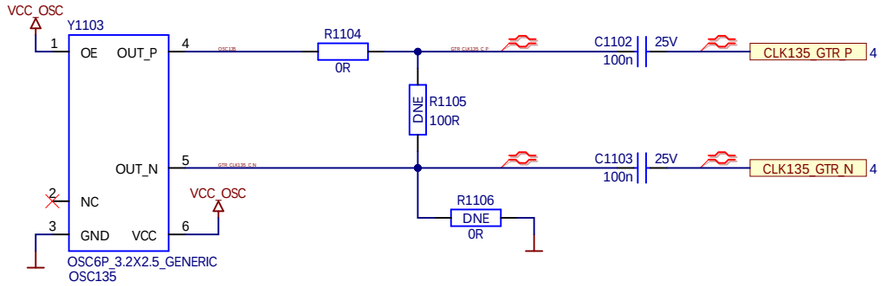

RTC Crystal

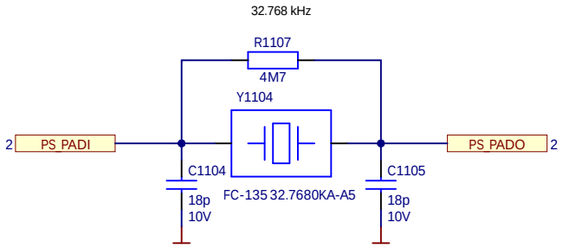

Oscillator Power Filters

not included in user schematics

ENCLUSTRA FPGA SOLUTIONS	Project ME-XU61.PrjPCB	Sheet Name ME-XU61_P11_OSCILLATORS.SchDoc	Customer No 0000	Revision R1.1	DNE = Do Not Equip	Confidential
	Company Enclustra GmbH Switzerland	Copyright © 2024 by Enclustra GmbH Switzerland	Project No 509	Designed CCIR	Date 16 Feb 2024	Sheet/sheets 11 / 20

Gigabit Ethernet PHY

not available when using PS PCIe with dedicated PERST# input

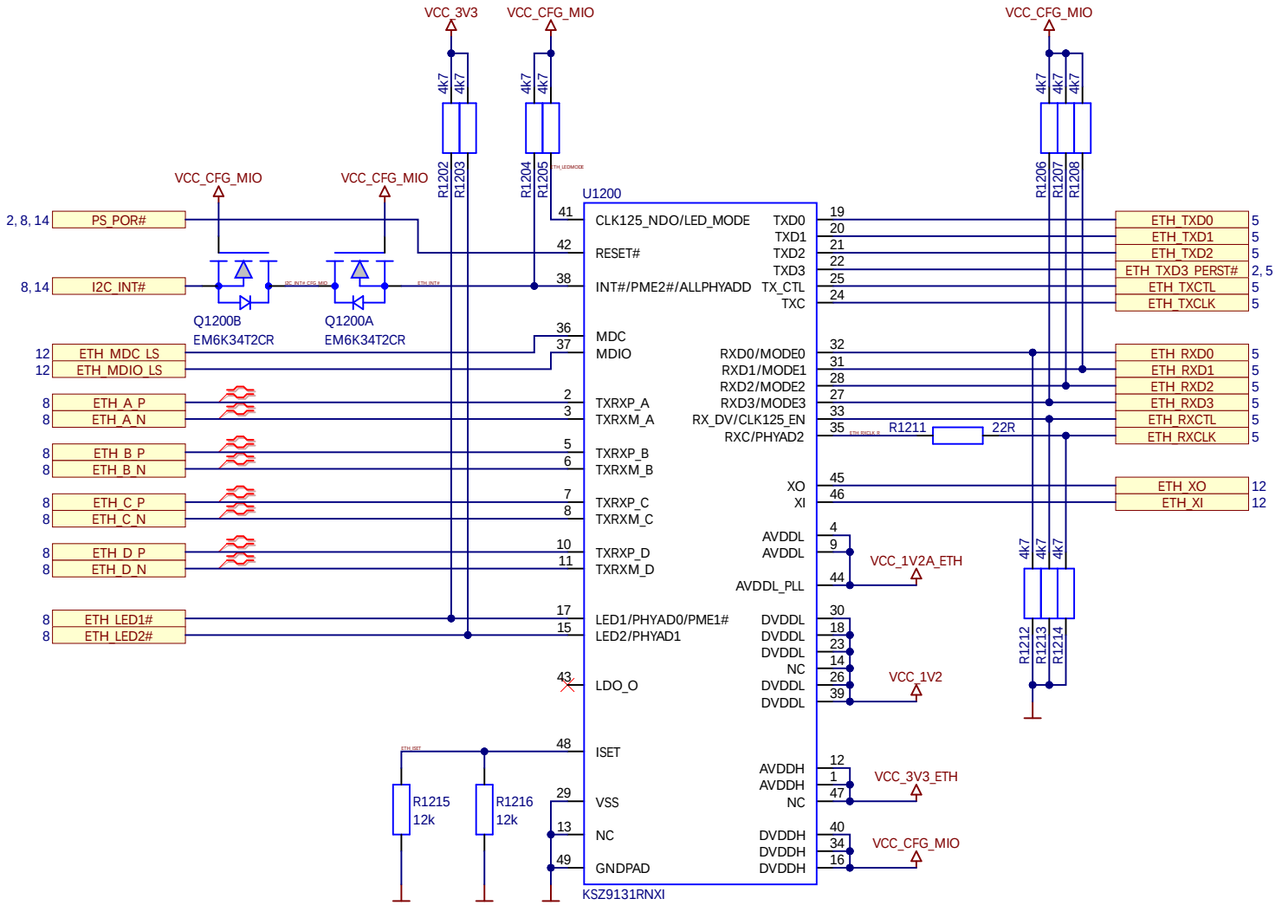

MODE<3:0> = 1110 -> RGMII, all capabilities

LED_Mode Pull up = Single LED

PhyAddress <2:0> = 011 -> 3

LED1 and LED2 are active low

MDIO Level Shifter

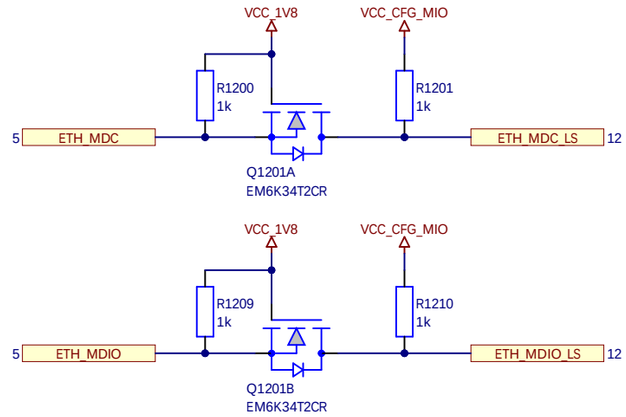

IO Level Shifter

if pins are used VCC_B64 ≥ 1.2V is required.

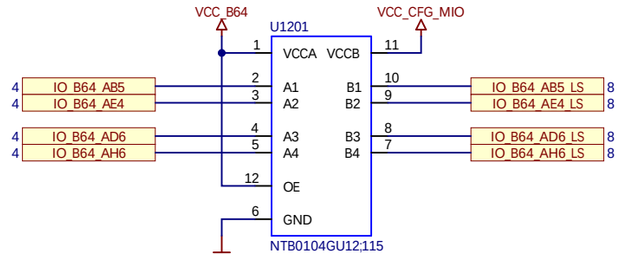

Ethernet Crystal

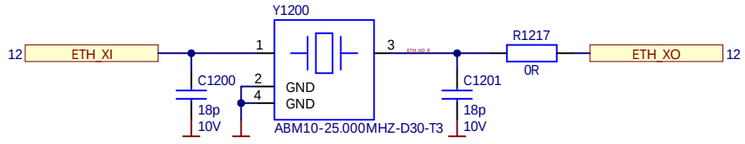

Ethernet Power Filters

not included in user schematics

ENCLUSTRA FPGA SOLUTIONS	Project ME-XU61.PrjPCB	Sheet Name ME-XU61_P12_ETHERNET_PHY.SchDoc	Customer No 0000	Revision R1.1	DNE = Do Not Equip	Confidential
	Company Enclustra GmbH Switzerland	Copyright © 2024 by Enclustra GmbH Switzerland	Project No 509	Designed CCIR	Date 16 Feb 2024	Sheet/sheets 12 / 20

USB 2.0 Device/Host PHY 0

A-Device ID=GND, B-Device ID=Float, Not Used ID=VDD33

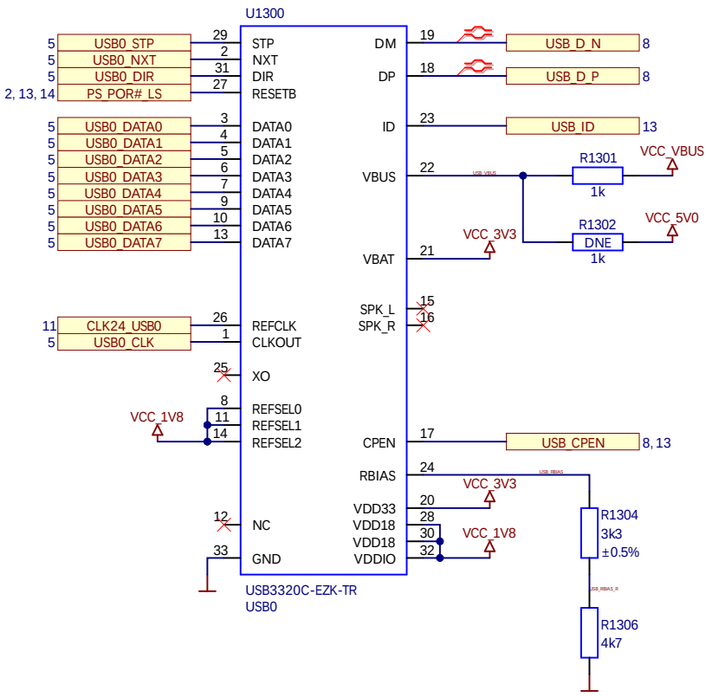

USB 2.0 Host PHY 1

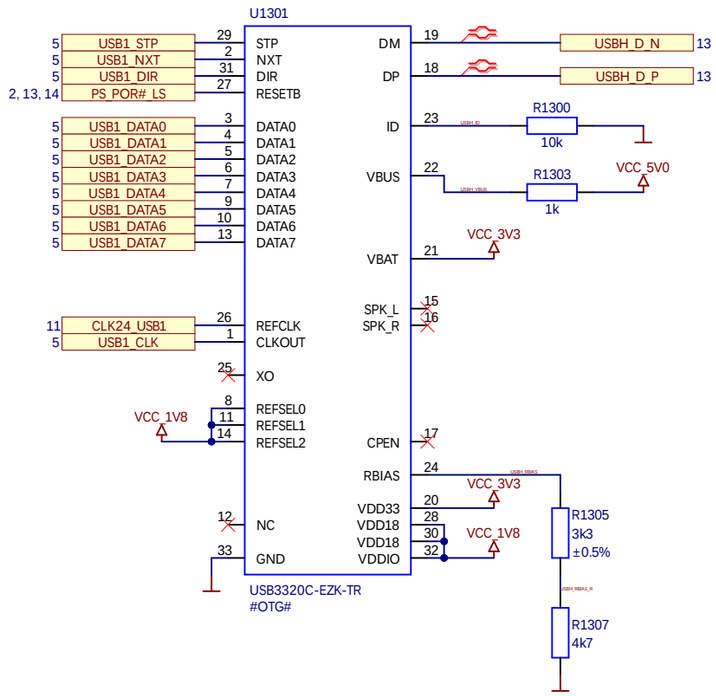

USB 2.0 Host/Device Mode

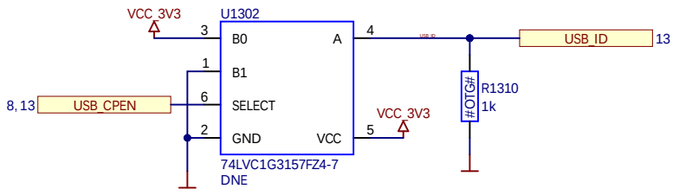

USB 2.0 VBUS Detect

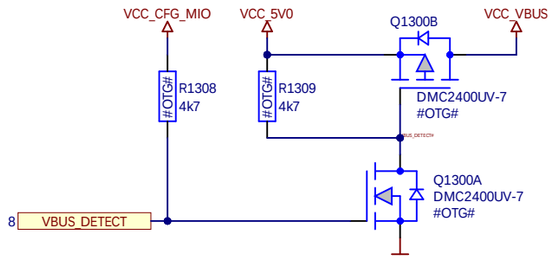

USB PHY 0 - OTG Support

optional

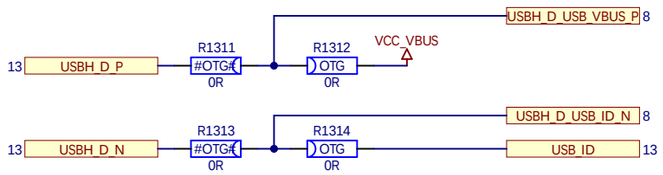

USB 2.0 Power Decoupling

not included in user schematics

ENCLUSTRA FPGA SOLUTIONS	Project ME-XU61.PrjPCB	Sheet Name ME-XU61_P13_USB2_PHYS.SchDoc	Customer No 0000	Revision R1.1	DNE = Do Not Equip	Confidential
	Company Enclustra GmbH Switzerland	Copyright © 2024 by Enclustra GmbH Switzerland	Project No 509	Designed CCIR	Date 16 Feb 2024	Sheet/sheets 13 / 20

Flash Level Shifter

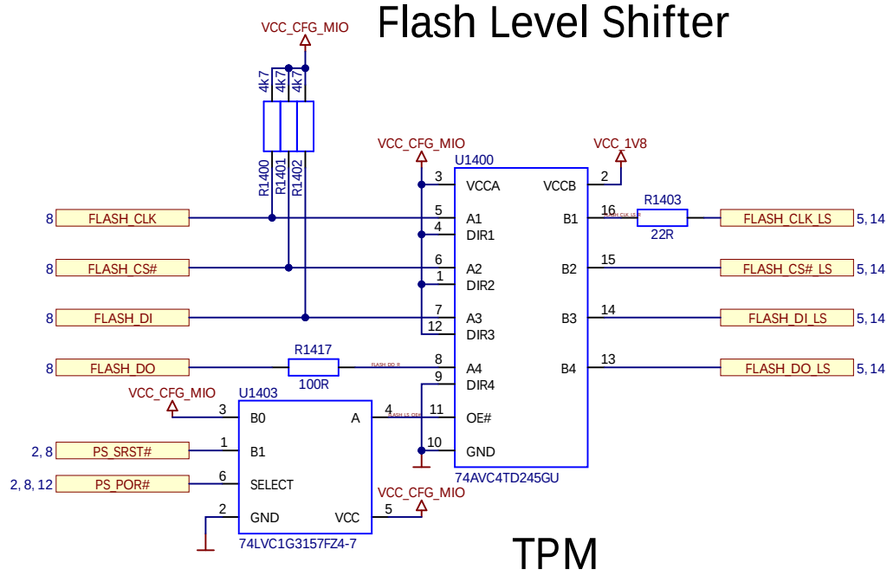

TPM

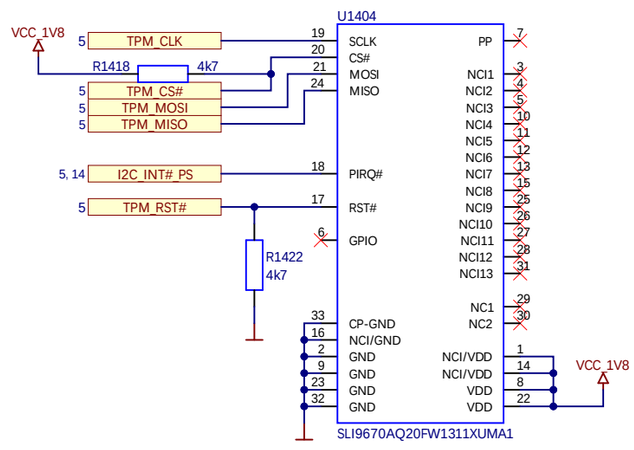

Secure EEPROM

for Enclustra use only

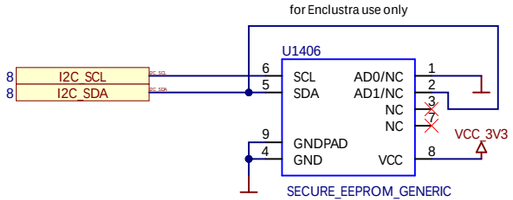

ATSHA204A-MAHDA-T: 110 0100 Rw
DS28CN01U-A00+: 101 1100 Rw

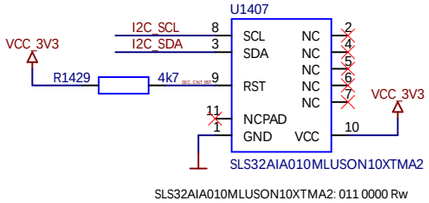

SLS32AIA010MLUSON10XTMA2: 011 0000 Rw

Quad SPI Flash

pin compatible with Serial NOR Flash from other vendors
Micron requires VCC_FLASH = 1.8V

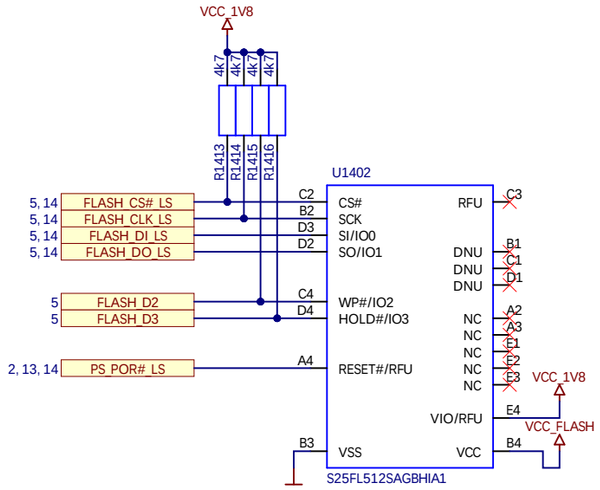

I2C Level Shifter

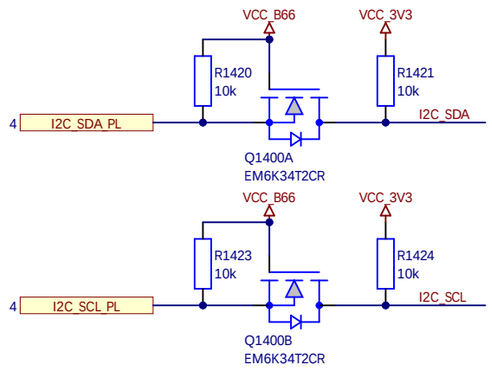

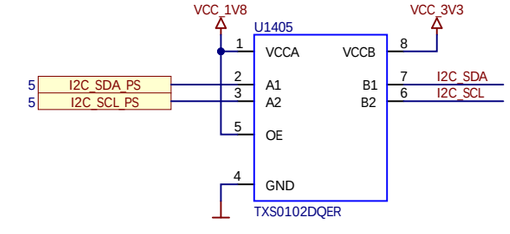

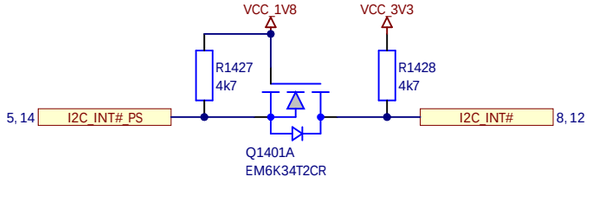

eMMC Flash

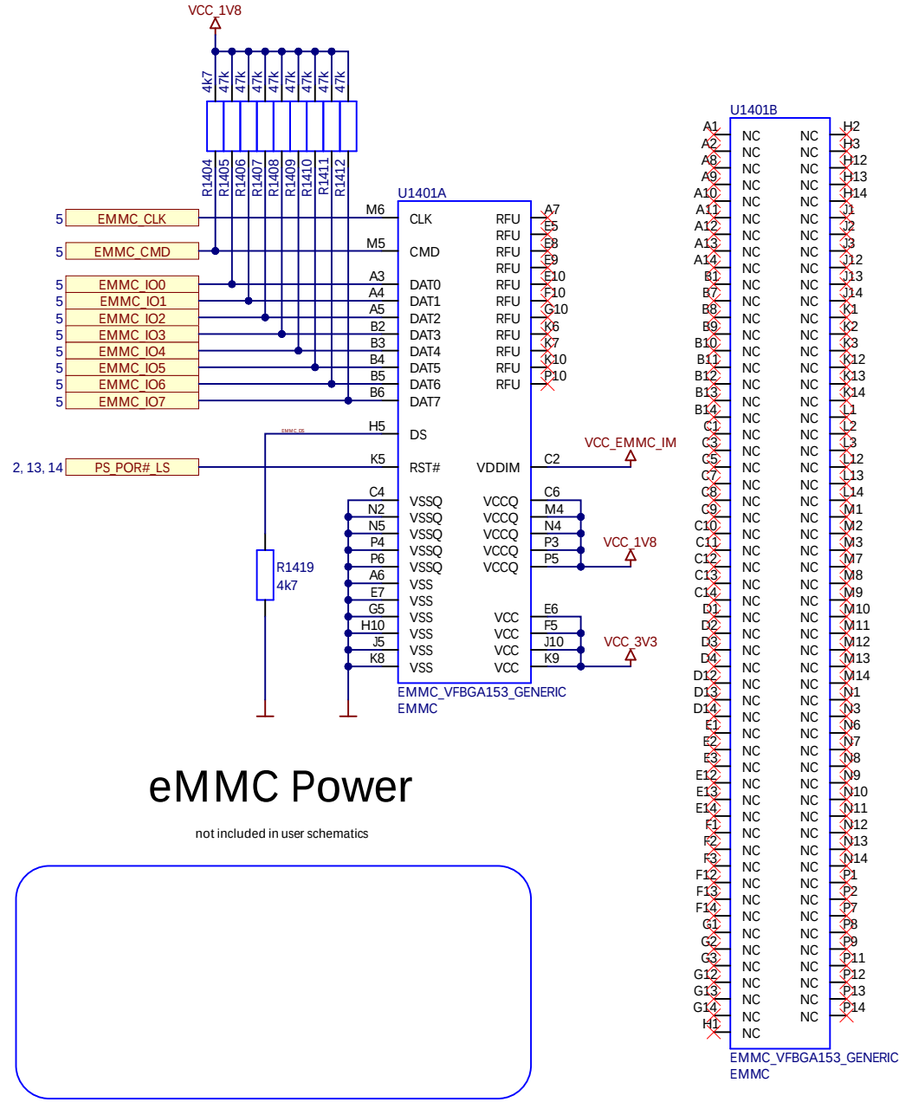

eMMC Power

not included in user schematics

Quad SPI Power

not included in user schematics

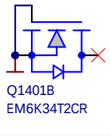

ENCLUSTRA FPGA SOLUTIONS	Project ME-XU61.PrjPCB	Sheet Name ME-XU61_P14_EMMC_QSPI_TPM_EEPROM.SchDoc	Customer No 0000	Revision R1.1	DNE = Do Not Equip	Confidential
	Company Enclustra GmbH Switzerland	Copyright © 2024 by Enclustra GmbH Switzerland	Project No 509	Designed CCIR	Date 16 Feb 2024	Sheet/sheets 14 / 20

Quad Buck Converter 0

I2C-Address = 001 0011 Rw, PMBUS-Address = 100 0011 Rw
not included in user schematics

Power Input Filter

not included in user schematics

Supported Voltage Ranges

Power Rail	Direction	Range	Tolerance
VCC_MOD	input	5 - 13.2V	±5%
VCC_CFG_MIO	input	1.8 - 3.3V	±5%
VCC_IO_BN	input	1.2 - 3.3V	±5%
VCC_IO_BO	input	1.2 - 3.3V	±5%
VCC_IO_BE_BF	input	1.2 - 3.3V	±5%
VCC_IO_B64	input	1.0 - 1.8V *	±5%
VCC_IO_B65	input	1.0 - 1.8V	±5%
VCC_IO_B66	input	1.0 - 1.8V	±5%
VCC_BAT	input	2.0 - 5.5V **	-
VCC_1V8	output	1.8V	±5%
VCC_2V5	output	2.5V	±5%
VCC_3V3	output	3.3V	±5%

When using VCC_IO_BN, VCC_IO_BO, VCC_IO_BE_BF at 3.3V, the tolerance is -5% +3%.
* When Module Connector Pins A88, A90, A92, A94 are used, VCC_IO_B64 ≥ 1.2 is required.
** Voltage range valid for LDO assembly option for VCC_BAT_FPGA (default assembly variant).

LDO 3.3V

3.3V 0.05A 1%
not included in user schematics

LDO 5.0V 0.15A

not included in user schematics

Power Sequencing

not included in user schematics

Quad Buck Converter 1

I2C-Address = 001 1101 Rw, PMBUS-Address = 100 1101 Rw
not included in user schematics

LDO 5.0V

5.0 V 0.05A 1%
not included in user schematics

LDO 1.5V 10mA

not included in user schematics

LDO 0.85V 0.5A

used for -1LE, -2LI, -3E speed grade SoC FPGAs
not included in user schematics

ENCLUSTRA FPGA SOLUTIONS	Project ME-XU61.PrjPCB	Sheet Name ME-XU61_P16_VCC_INT_1.1_1.2_2.5_1.5.SchDoc	Customer No 0000	Revision R1.1	DNE = Do Not Equip	Confidential
	Company Enclustra GmbH Switzerland	Copyright © 2024 by Enclustra GmbH Switzerland	Project No 509	Designed CCIR	Date 16 Feb 2024	Sheet/sheets 16 / 20

Voltage Monitoring

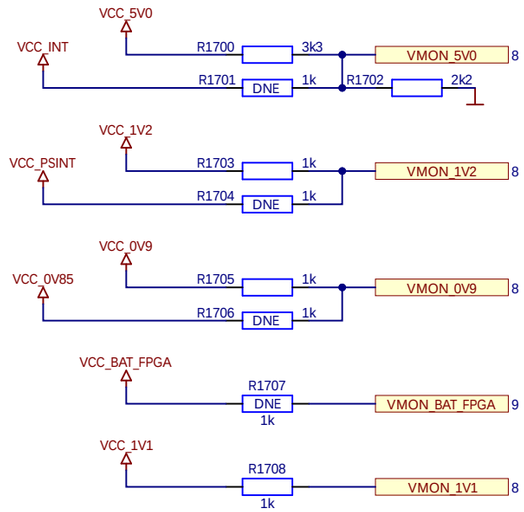

FPGA I/O Over-Voltage Protection

not included in user schematics

ENCLUSTRA FPGA SOLUTIONS	Project ME-XU61.PrjPCB	Sheet Name ME-XU61_P17_VMON_PROTECTION.SchDoc	Customer No 0000	Revision R1.1	DNE = Do Not Equip	Confidential
	Company Enclustra GmbH Switzerland	Copyright © 2024 by Enclustra GmbH Switzerland	Project No 509	Designed CCIR	Date 16 Feb 2024	Sheet/sheets 17 / 20

Module Mounting Holes M3

Z1804

ME-MOUNTING-HOLES_65.0X54.0_4P

PCB

P1800

ME-XU61-A1

Text and Logos

Z1800

ENCLUSTRA

Z1801

Mercury+ XU61

Z1802

QR 5x5

Z1803

EN000000
SN999999

EN-SN 6X15

Z1805

94V-0

Z1806

Z1807

E888888

Z1808

0000

Z1809

WW / YY

Z1810

RoHS

Z1811

Pin-1 Mark Square 1mm

Z1812

Pin-1 Mark Square 1mm

PCB Fiducials

FID1800 FID1801 FID1802

FID1803 FID1804 FID1805

ENCLUSTRA FPGA SOLUTIONS	Project ME-XU61.PrjPCB	Sheet Name ME-XU61_P18_MECHANICS.SchDoc	Customer No 0000	Revision R1.1	DNE = Do Not Equip	Confidential
	Company Enclustra GmbH Switzerland	Copyright © 2024 by Enclustra GmbH Switzerland	Project No 509	Designed CCIR	Date 16 Feb 2024	Sheet/sheets 18 / 20

Component Options

FPGA	LPDDR4	SEC_EEPROM	L1U0	L2U2	L3U3	VCCINT_VCU	USB0	OTG	TD	EMMC
Part U200A XCZU2CG-1SFVC784E EN102619	Part U1000A:1 IS43LQ32128EA-062BLI EN105321	Part U1406A ATSHA204A-MAHDA-T EN100827	Part L1502A 1u0 EN105918	Part L1600A 2u2 EN105920	Part L1500A 3u3 EN105919	R603 or R604	U1300 or DNE	R1312, R1314 or R1308, R1309, R1311, R1313 U1301, Q1300	R1003, R1004	Part U1401A:1 KLMAG1JETD-B041 EN103298
Part U200B XCZU2CG-1SFVC784I EN103152	Part U1000B:1 NT6AN128T32AV-J1I EN105411	Part U1406B DS28CN01U-A00+ EN100280	Part L1503A 1u0 EN105918	Part L1601A 2u2 EN105920	Part L1501A 3u3 EN105919	C711 - C716 or DNE				Part U1401B:1 FEMDRW016G-88A43 EN104303
Part U200C XCZU2CG-L1SFVC784I4524 EN105992	Part U1000C:1 NT6AN512T32AV-J1I EN105410		Part L1602A 1u0 EN105918						default: DNE, assembled for TD	
Part U200D XCZU2EG-1SFVC784I EN101958			Part L1603A 1u0 EN105918							
Part U200E XCZU2EG-L1SFVC784I4524 EN105466										
Part U200F XCZU3EG-2SFVC784I EN102020										
Part U200G XCZU4CG-1SFVC784E EN102964										
Part U200H XCZU4EV-1SFVC784I EN102021										
Part U200I XCZU5CG-1SFVC784E EN105377										
Part U200J XCZU4CG-1SFVC784E4524 EN105473										
Part U200K XCZU5CG-1SFVC784E4524 EN105993										

Component Assembly

Enclustra Product	FPGA	LPDDR4	SEC_EEPROM	L1U0	L2U2	L3U3	VCCINT_VCU	USB0	OTG	TD	EMMC
Variant EN106048:0 ME-XU61-2CG-1E-D9-NU-R1.1	Option EN106048:1 FPGA EN102619	Option EN106048:2 LPDDR4 EN105321	Option EN106048:3 SEC_EEPROM EN100827	Option EN106048:4 L1U0 EN105918	Option EN106048:5 L2U2 EN105920	Option EN106048:6 L3U3 EN105919	Option EN106048:7 VCCINT_VCU DNE	Option EN106048:8 USB0 DNE	Option EN106048:9 OTG	Option EN106048:10 TD DNE	Option EN106048:11 EMMC EN104303
Variant EN106049:0 ME-XU61-2CG-1I-D9-NU-R1.1	Option EN106049:1 FPGA EN103152	Option EN106049:2 LPDDR4 EN105321	Option EN106049:3 SEC_EEPROM EN100827	Option EN106049:4 L1U0 EN105918	Option EN106049:5 L2U2 EN105920	Option EN106049:6 L3U3 EN105919	Option EN106049:7 VCCINT_VCU DNE	Option EN106049:8 USB0 DNE	Option EN106049:9 OTG	Option EN106049:10 TD DNE	Option EN106049:11 EMMC EN104303
Variant EN106026:0 ME-XU61-2CG-L1I4524-D9-NU-R1.1	Option EN106026:1 FPGA EN105992	Option EN106026:2 LPDDR4 EN105321	Option EN106026:3 SEC_EEPROM EN100827	Option EN106026:4 L1U0 EN105918	Option EN106026:5 L2U2 EN105920	Option EN106026:6 L3U3 EN105919	Option EN106026:7 VCCINT_VCU DNE	Option EN106026:8 USB0 DNE	Option EN106026:9 OTG	Option EN106026:10 TD DNE	Option EN106026:11 EMMC EN104303
Variant EN106050:0 ME-XU61-2EG-1I-D9-NU-R1.1	Option EN106050:1 FPGA EN101958	Option EN106050:2 LPDDR4 EN105321	Option EN106050:3 SEC_EEPROM EN100827	Option EN106050:4 L1U0 EN105918	Option EN106050:5 L2U2 EN105920	Option EN106050:6 L3U3 EN105919	Option EN106050:7 VCCINT_VCU DNE	Option EN106050:8 USB0 DNE	Option EN106050:9 OTG	Option EN106050:10 TD DNE	Option EN106050:11 EMMC EN104303
Variant EN106027:0 ME-XU61-2EG-L1I4524-D9-NU-R1.1	Option EN106027:1 FPGA EN105466	Option EN106027:2 LPDDR4 EN105321	Option EN106027:3 SEC_EEPROM EN100827	Option EN106027:4 L1U0 EN105918	Option EN106027:5 L2U2 EN105920	Option EN106027:6 L3U3 EN105919	Option EN106027:7 VCCINT_VCU DNE	Option EN106027:8 USB0 DNE	Option EN106027:9 OTG	Option EN106027:10 TD DNE	Option EN106027:11 EMMC EN104303
Variant EN106045:0 ME-XU61-2EG-L1I4524-D11-R1.1	Option EN106045:1 FPGA EN105466	Option EN106045:2 LPDDR4 EN105410	Option EN106045:3 SEC_EEPROM EN100827	Option EN106045:4 L1U0 EN105918	Option EN106045:5 L2U2 EN105920	Option EN106045:6 L3U3 EN105919	Option EN106045:7 VCCINT_VCU DNE	Option EN106045:8 USB0	Option EN106045:9 OTG DNE	Option EN106045:10 TD DNE	Option EN106045:11 EMMC EN104303
Variant EN106046:0 ME-XU61-2EG-L1I4524-D11-NU-R1.1	Option EN106046:1 FPGA EN105466	Option EN106046:2 LPDDR4 EN105410	Option EN106046:3 SEC_EEPROM EN100827	Option EN106046:4 L1U0 EN105918	Option EN106046:5 L2U2 EN105920	Option EN106046:6 L3U3 EN105919	Option EN106046:7 VCCINT_VCU DNE	Option EN106046:8 USB0 DNE	Option EN106046:9 OTG	Option EN106046:10 TD DNE	Option EN106046:11 EMMC EN104303
Variant EN106028:0 ME-XU61-4CG-1E4524-D11-R1.1	Option EN106028:1 FPGA EN105473	Option EN106028:2 LPDDR4 EN105410	Option EN106028:3 SEC_EEPROM EN100827	Option EN106028:4 L1U0 EN105918	Option EN106028:5 L2U2 EN105920	Option EN106028:6 L3U3 EN105919	Option EN106028:7 VCCINT_VCU DNE	Option EN106028:8 USB0	Option EN106028:9 OTG DNE	Option EN106028:10 TD DNE	Option EN106028:11 EMMC EN104303
Variant EN106029:0 ME-XU61-5CG-1E4524-D11-R1.1	Option EN106029:1 FPGA EN105993	Option EN106029:2 LPDDR4 EN105410	Option EN106029:3 SEC_EEPROM EN100827	Option EN106029:4 L1U0 EN105918	Option EN106029:5 L2U2 EN105920	Option EN106029: L3U3 EN105919	Option EN106029:7 VCCINT_VCU DNE	Option EN106029:8 USB0	Option EN106029:9 OTG DNE	Option EN106029:910 TD DNE	Option EN106029:11 EMMC EN104303

Component Options

OSC33	OSC100	OSC24	OSC135
Part Y1100A DSC1001CI2-033.3330 EN104103	Part Y1101A DSC1123CI2-100.0000 EN103018	Part Y1102A O 24,0-JO22-B-1V3-1-T1-LF EN104125	Part Y1103A SIT9121AI-2B1-33E135.000 EN104152

Component Assembly

OSC33	OSC100	OSC24	OSC135
Option EN106048:14 OSC33 EN104103	Option EN106048:15 OSC100 EN103018	Option EN106048:13 OSC24 EN104125	Option EN106048:12 OSC135 EN104152
Option EN106049:14 OSC33 EN104103	Option EN106049:15 OSC100 EN103018	Option EN106049:13 OSC24 EN104125	Option EN106049:12 OSC135 EN104152
Option EN106026:14 OSC33 EN104103	Option EN106026:15 OSC100 EN103018	Option EN106026:13 OSC24 EN104125	Option EN106026:12 OSC135 EN104152
Option EN106050:14 OSC33 EN104103	Option EN106050:15 OSC100 EN103018	Option EN106050:13 OSC24 EN104125	Option EN106050:12 OSC135 EN104152
Option EN106027:14 OSC33 EN104103	Option EN106027:15 OSC100 EN103018	Option EN106027:13 OSC24 EN104125	Option EN106027:12 OSC135 EN104152
Option EN106045:14 OSC33 EN104103	Option EN106045:15 OSC100 EN103018	Option EN106045:13 OSC24 EN104125	Option EN106045:12 OSC135 EN104152
Option EN106046:14 OSC33 EN104103	Option EN106046:15 OSC100 EN103018	Option EN106046:13 OSC24 EN104125	Option EN106046:12 OSC135 EN104152
Option EN106028:14 OSC33 EN104103	Option EN106028:15 OSC100 EN103018	Option EN106028:13 OSC24 EN104125	Option EN106028:12 OSC135 EN104152
Option EN106029:14 OSC33 EN104103	Option EN106029:15 OSC100 EN103018	Option EN106029:13 OSC24 EN104125	Option EN106029:12 OSC135 EN104152