Enclustra User Schematic

Mercury+ XU8 Revision 3.0

Disclaimer

User schematics do not include proprietary Enclustra design elements, such as power supply circuits.
These circuits use optimized designs which are extremely compact and remain proprietary to Enclustra.
The user manual provides all necessary information to use the module and its interfaces.

User schematics are provided after purchase of Enclustra hardware, and may also be provided in certain cases before purchase, to assist in product evaluation.
No part of the schematics may be copied or modified without written permission from Enclustra.

Full schematics, including a full bill-of-materials, may be available through the purchase of a hardware licence for the product in question.
Please contact Enclustra Sales for more information.

Note: DNE = Do Not Equip (parts not equipped by default)

© 2022 by Enclustra FPGA Solutions

Mercury+ XU8 SoC Module

Revision 3.0

Sheet 1:	Cover
Sheet 2:	SoC FPGA Configuration | User LEDs
Sheet 3:	SoC FPGA MGT Banks
Sheet 4:	SoC FPGA IO Banks
Sheet 5:	SoC FPGA PS Banks
Sheet 6:	SoC FPGA Power
Sheet 7:	Power Decoupling
Sheet 8:	Module Connectors A | B
Sheet 9:	Module Connector C
Sheet 10:	PS DDR4 SDRAM Bytes 0-3
Sheet 11:	PS DDR4 SDRAM Bytes 4-8 (ECC)
Sheet 12:	PL DDR4 SDRAM
Sheet 13:	Gigabit Ethernet PHYs
Sheet 14:	USB 2.0 PHYs
Sheet 15:	Level Shifters | Secure EEPROM
Sheet 16:	eMMC Flash | QSPI Flash
Sheet 17:	Power 3.3V | 1.2V | INT | 5.0V
Sheet 18:	Power PSINT | 0.9V | 2.5V | VTT
Sheet 19:	Power 1.8V | 0.85V
Sheet 20:	Mechanics
Sheet 21:	Component Assembly
Sheet 22:	Component Assembly

Boot Mode Selection

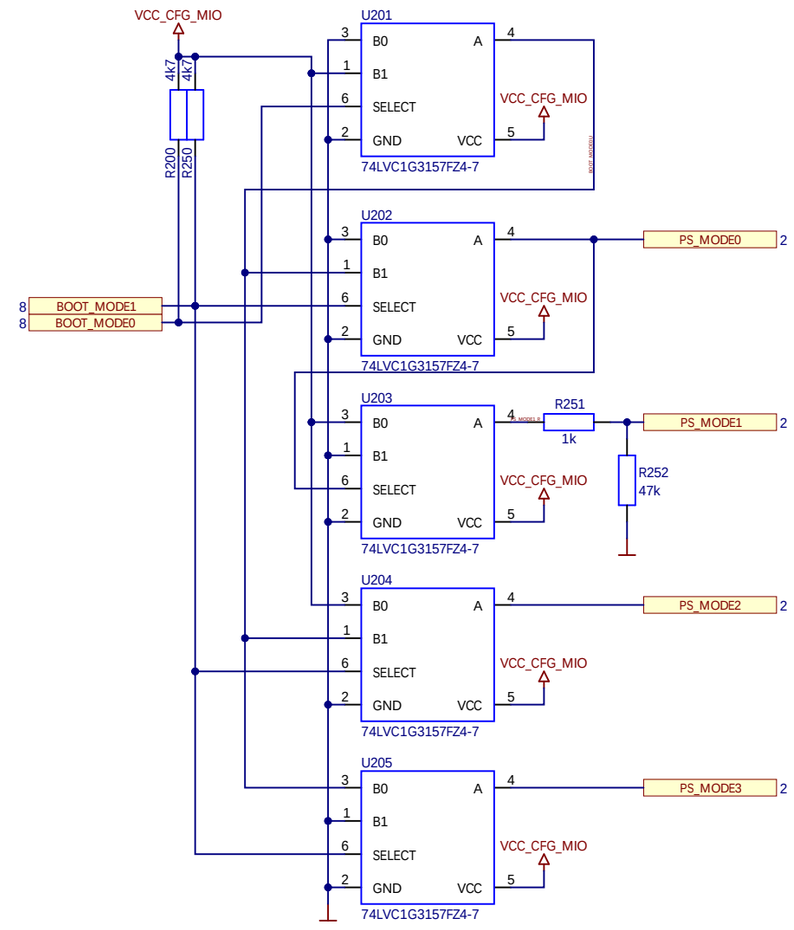

PCIe Reset

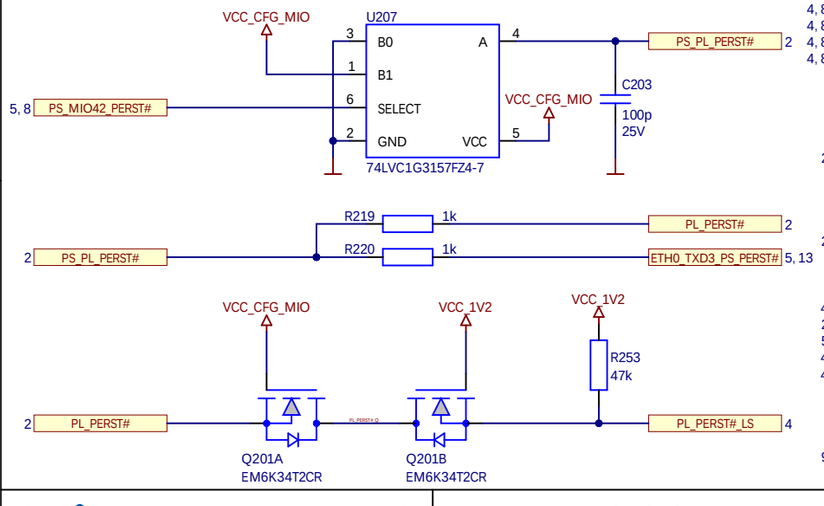

User LEDs

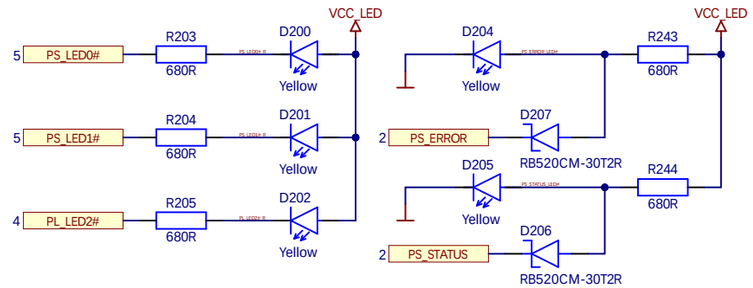

LED Power

not included in user schematics

HD Bank Termination

optional

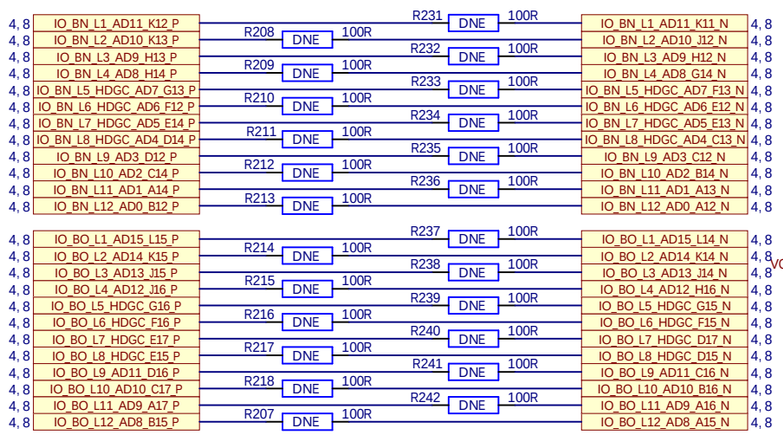

Miscellaneous

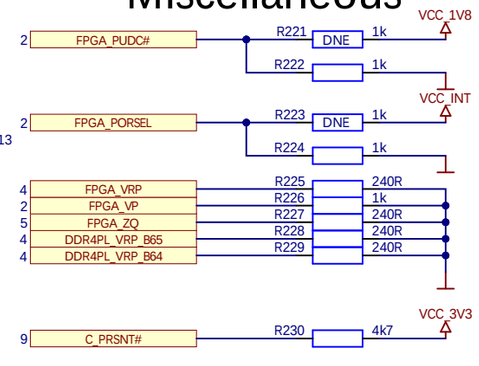

Boot Modes

	Boot Mode		Mode Straps	Configuration	
	1	0	PS_MODE	PL Boot	PS Boot
eMMC Mode	0	0	0110	PS	eMMC
SD Mode LS not supported	0	1	1110	PS	SDIO with level shifter
QSPI Mode	1	0	0010	PS	QSPI
SD Mode default	1	1	0101	PS	SDIO
JTAG Mode (*)	1	0	0000	PS	JTAG

SD Mode LS mode may be supported in the future. It requires VCC_CFG_MIO of 1.8V.

(*) Short-circuit R252 to enable JTAG mode

FPGA Configuration

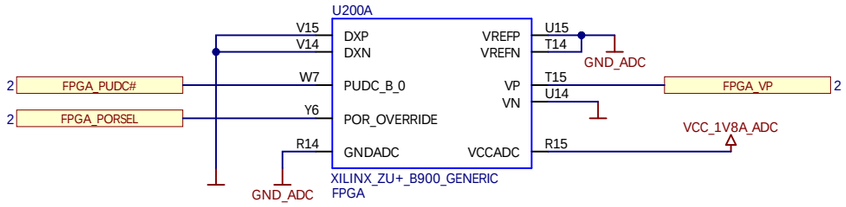

FPGA Reference Voltage

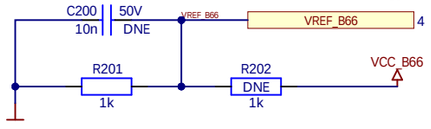

FPGA PS Configuration

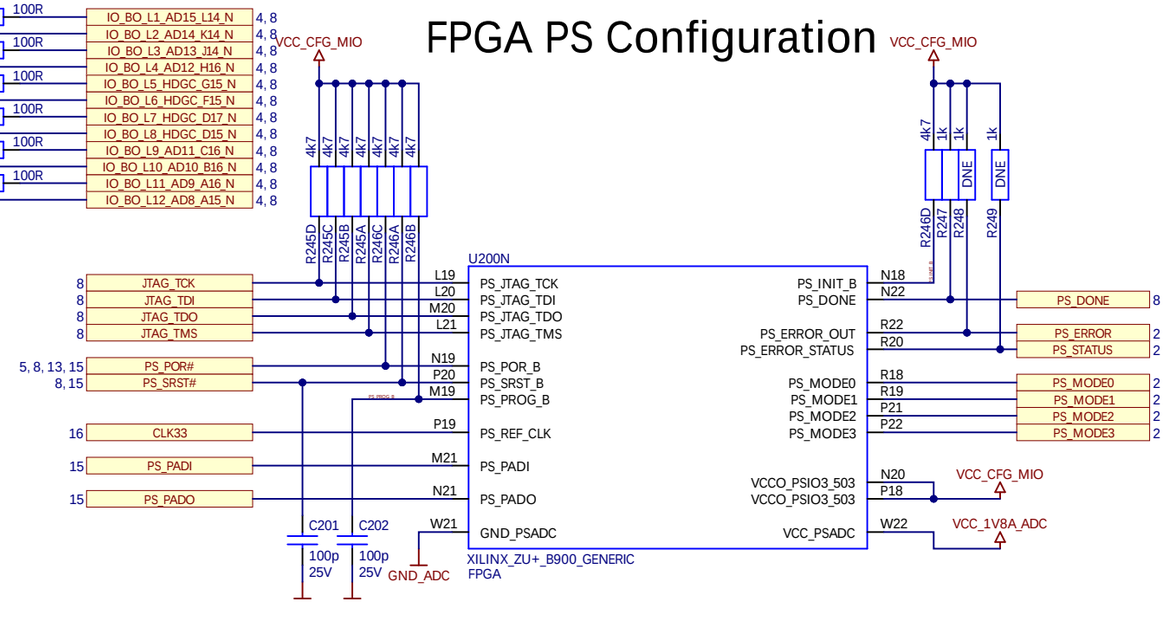

FPGA MGT Bank A

Bank 223 on ZU4/ZU5 | Bank 224 on ZU7

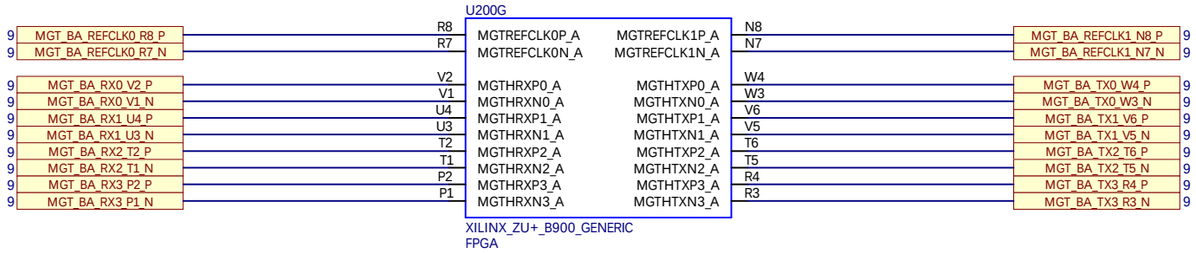

FPGA MGT Bank B

Bank 224 on ZU4/ZU5 | Bank 225 on ZU7

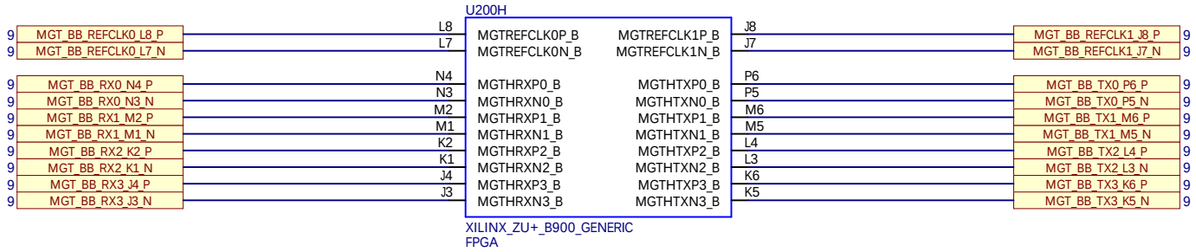

FPGA MGT Bank C

Bank 225 on ZU4/ZU5 | Bank 226 on ZU7

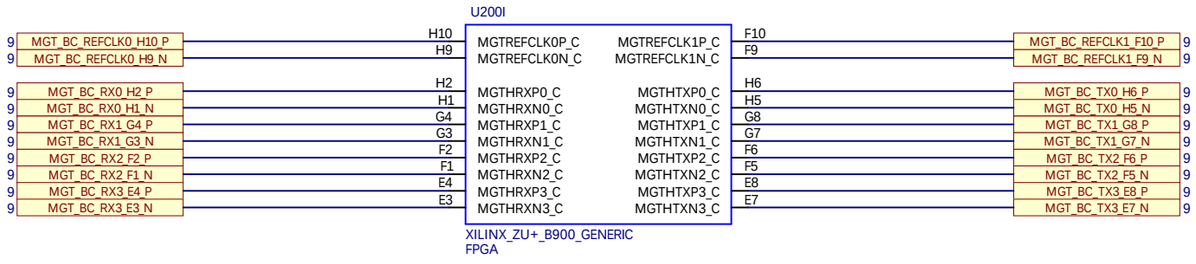

FPGA MGT Bank D

Bank 226 on ZU4/ZU5 | Bank 227 on ZU7

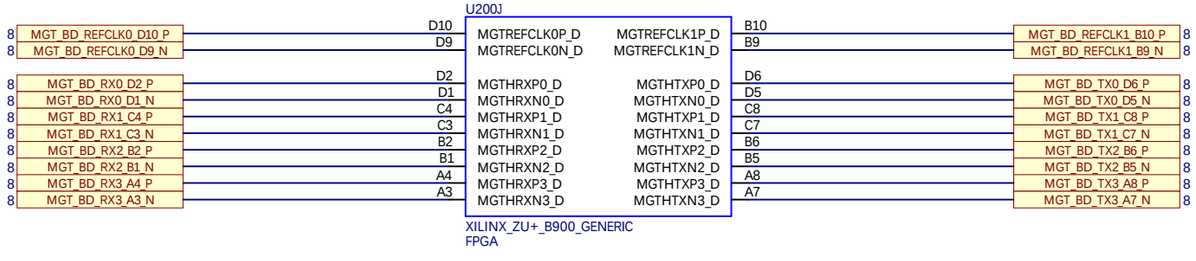

FPGA PS GTR Bank 505

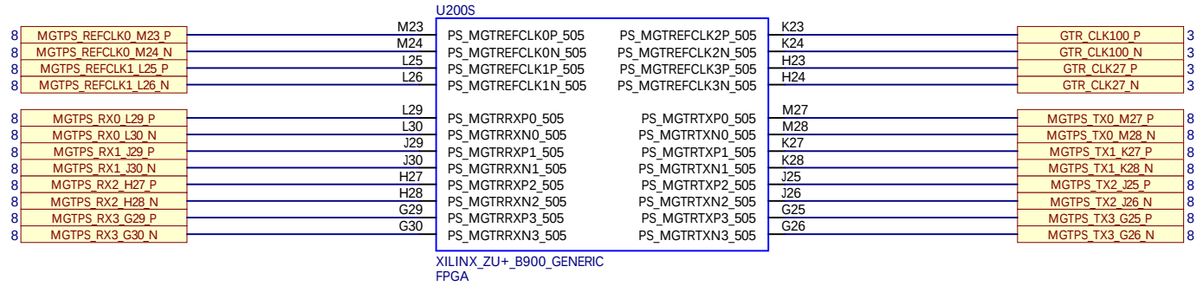

GTR 100 MHz Oscillator

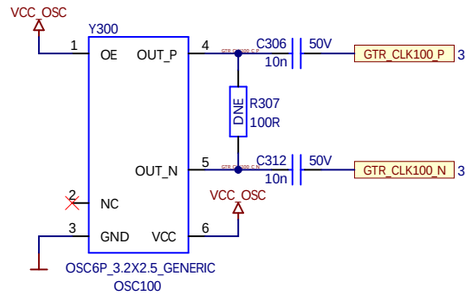

PL 100 MHz Oscillator

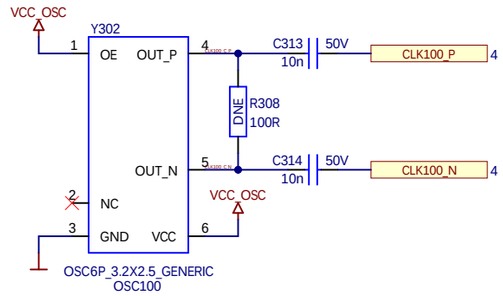

GTR 27 MHz Oscillator

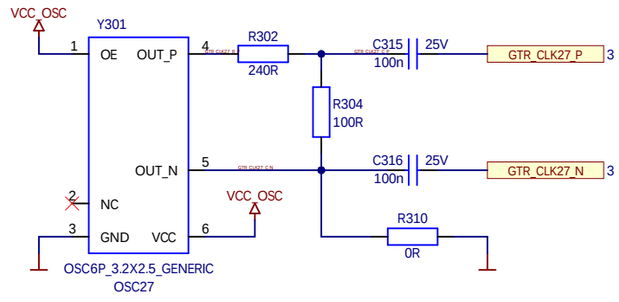

not included in user schematics

Oscillator Power Filters

not included in user schematics

ENCLUSTRA FPGA SOLUTIONS	Project ME-XU8.PrjPcb	Sheet Name ME-XU8_P03_FPGA_MGT_BANKS.SchDoc	Customer No 0000	Revision R3.0	DNE = Do Not Equip	Confidential
	Company Enclustra FPGA Solutions	Copyright © 2022 by Enclustra GmbH Switzerland	Project No 506	Designed MHEI	Date 26 Oct 2022	Sheet/sheets 3 / 23

FPGA HP Bank 64

VCCO = VCC_1V2

U200D

12	DDR4PL_DM0	AA13	IO_L1P_T0L0D_64	IO_L13P_T2L0Q_GC_64	AF16	DDR4PL_DM2	12
15	I2C_SCL_PL	AB13	IO_L1N_T0L1D_64	IO_L13N_T2L1Q_GC_64	AF17	IO_B64_AF17	15
12	DDR4PL_DQ3	AE14	IO_L2P_T0L2_64	IO_L14P_T2L2_GC_64	AD17	DDR4PL_DQ18	12
12	DDR4PL_DQ7	AE13	IO_L2N_T0L3_64	IO_L14N_T2L3_GC_64	AE17	DDR4PL_DQ21	12
12	DDR4PL_DQ4	AC14	IO_L3P_T0L4_AD15P_64	IO_L15P_T2L4_AD11P_64	AC16	DDR4PL_DQ16	12
12	DDR4PL_DQ5	AD14	IO_L3N_T0L5_AD15N_64	IO_L15N_T2L5_AD11N_64	AD16	DDR4PL_DQ23	12
12	DDR4PL_DQS0_P	AA14	IO_L4P_T0U6D_AD7P_64	IO_L16P_T2U6Q_AD3P_64	AA16	DDR4PL_DQS2_P	12
12	DDR4PL_DQS0_N	AB14	IO_L4N_T0U7D_AD7N_64	IO_L16N_T2U7Q_AD3N_64	AB16	DDR4PL_DQS2_N	12
12	DDR4PL_DQ6	AA15	IO_L5P_T0U8_AD14P_64	IO_L17P_T2U8_AD10P_64	AC17	DDR4PL_DQ20	12
12	DDR4PL_DQ0	AB15	IO_L5N_T0U9_AD14N_64	IO_L17N_T2U9_AD10N_64	AC18	DDR4PL_DQ22	12
12	DDR4PL_DQ2	AD15	IO_L6P_T0U10_AD6P_64	IO_L18P_T2U10_AD2P_64	AD19	DDR4PL_DQ19	12
12	DDR4PL_DQ1	AE15	IO_L6N_T0U11_AD6N_64	IO_L18N_T2U11_AD2N_64	AE19	DDR4PL_DQ17	12
2	DDR4PL_VRP_B64	AC13	IO_T0U12_VRP_64	IO_T2U12_64	AC19	IO_B64_AC19	15
12	DDR4PL_DM1	AG13	IO_L7P_T1L0Q_AD13P_64	IO_L19P_T3L0D_AD9P_64	AG16	DDR4PL_DM3	12
15	I2C_SDA_PL	AH13	IO_L7N_T1L1Q_AD13N_64	IO_L19N_T3L1D_AD9N_64	AH16	IO_B64_AH16	15
12	DDR4PL_DQ9	AK13	IO_L8P_T1L2_AD5P_64	IO_L20P_T3L2_AD1P_64	AJ16	DDR4PL_DQ30	12
12	DDR4PL_DQ11	AK12	IO_L8N_T1L3_AD5N_64	IO_L20N_T3L3_AD1N_64	AK16	DDR4PL_DQ25	12
12	DDR4PL_DQ15	AJ14	IO_L9P_T1L4_AD12P_64	IO_L21P_T3L4_AD8P_64	AH17	DDR4PL_DQ28	12
12	DDR4PL_DQ13	AK14	IO_L9N_T1L5_AD12N_64	IO_L21N_T3L5_AD8N_64	AJ17	DDR4PL_DQ27	12
12	DDR4PL_DQS1_P	AJ15	IO_L10P_T1U6Q_AD4P_64	IO_L22P_T3U6D_AD0P_64	AK17	DDR4PL_DQS3_P	12
12	DDR4PL_DQS1_N	AK15	IO_L10N_T1U7Q_AD4N_64	IO_L22N_T3U7D_AD0N_64	AK18	DDR4PL_DQS3_N	12
12	DDR4PL_DQ12	AG14	IO_L11P_T1U8_GC_64	IO_L23P_T3U8_64	AG18	DDR4PL_DQ26	12
12	DDR4PL_DQ8	AH14	IO_L11N_T1U9_GC_64	IO_L23N_T3U9_64	AH18	DDR4PL_DQ29	12
12	DDR4PL_DQ14	AF15	IO_L12P_T1U10_GC_64	IO_L24P_T3U10_64	AE18	DDR4PL_DQ24	12
12	DDR4PL_DQ10	AG15	IO_L12N_T1U11_GC_64	IO_L24N_T3U11_64	AF18	DDR4PL_DQ31	12
2	PL_LED2#	AF13	IO_T1U12_64	IO_T3U12_64	AG19	IO_B64_AG19	15
				VCCO_64	AC15		
				VCCO_64	AF14		
4	VREF_DDR4PL	AA17	VREF_64	VCCO_64	AG17		

VCC_1V2

C400 100p 25V DNE

C401 100p 25V DNE

XILINX_ZU+_B900_GENERIC FPGA

FPGA HP Bank 66

VCCO = VCC_IO_B66 (max 1.8V)

U200F

8	IO_B66_L1_AC12_P	AC12	IO_L1P_T0L0D_66	IO_L13P_T2L0Q_GC_66	AD7	IO_B66_L13_GC_AD7_P	8
8	IO_B66_L1_AD12_N	AD12	IO_L1N_T0L1D_66	IO_L13N_T2L1Q_GC_66	AE7	IO_B66_L13_GC_AE7_N	8
8	IO_B66_L2_AA12_P	AA12	IO_L2P_T0L2_66	IO_L14P_T2L2_GC_66	AB6	IO_B66_L14_GC_AB6_P	8
8	IO_B66_L2_AA11_N	AA11	IO_L2N_T0L3_66	IO_L14N_T2L3_GC_66	AB5	IO_B66_L14_GC_AB5_N	8
8	IO_B66_L3_AD15_AB11_P	AB11	IO_L3P_T0L4_AD15P_66	IO_L15P_T2L4_AD11P_66	AD5	IO_B66_L15_AD11_AD5_P	8
8	IO_B66_L3_AD15_AC11_N	AC11	IO_L3N_T0L5_AD15N_66	IO_L15N_T2L5_AD11N_66	AE5	IO_B66_L15_AD11_AE5_N	8
8	IO_B66_L4_AD7_AD11_P	AD11	IO_L4P_T0U6D_AD7P_66	IO_L16P_T2U6Q_AD3P_66	AD4	IO_B66_L16_AD3_AD4_P	8
8	IO_B66_L4_AD7_AD10_N	AD10	IO_L4N_T0U7D_AD7N_66	IO_L16N_T2U7Q_AD3N_66	AE4	IO_B66_L16_AD3_AE4_N	8
8	IO_B66_L5_AD14_AB10_P	AB10	IO_L5P_T0U8_AD14P_66	IO_L17P_T2U8_AD10P_66	AB4	IO_B66_L17_AD10_AB4_P	8
8	IO_B66_L5_AD14_AB9_N	AB9	IO_L5N_T0U9_AD14N_66	IO_L17N_T2U9_AD10N_66	AC4	IO_B66_L17_AD10_AC4_N	8
8	IO_B66_L6_AD6_Y10_P	Y10	IO_L6P_T0U10_AD6P_66	IO_L18P_T2U10_AD2P_66	AA6	IO_B66_L18_AD2_AA6_P	8
8	IO_B66_L6_AD6_AA10_N	AA10	IO_L6N_T0U11_AD6N_66	IO_L18N_T2U11_AD2N_66	AA5	IO_B66_L18_AD2_AA5_N	8
2	FPGA_VRP	Y9	IO_T0U12_VRP_66	IO_T2U12_66	AE3	IO_B66_AE3	8
8	IO_B66_L7_AD13_AC9_P	AC9	IO_L7P_T1L0Q_AD13P_66	IO_L19P_T3L0D_AD9P_66	AD2	IO_B66_L19_AD9_AD2_P	8
8	IO_B66_L7_AD13_AD9_N	AD9	IO_L7N_T1L1Q_AD13N_66	IO_L19N_T3L1D_AD9N_66	AE2	IO_B66_L19_AD9_AE2_N	8
8	IO_B66_L8_AD5_AC6_P	AC6	IO_L8P_T1L2_AD5P_66	IO_L20P_T3L2_AD1P_66	AD1	IO_B66_L20_AD1_AD1_P	8
8	IO_B66_L8_AD5_AD6_N	AD6	IO_L8N_T1L3_AD5N_66	IO_L20N_T3L3_AD1N_66	AE1	IO_B66_L20_AD1_AE1_N	8
8	IO_B66_L9_AD12_W8_P	W8	IO_L9P_T1L4_AD12P_66	IO_L21P_T3L4_AD8P_66	AC3	IO_B66_L21_AD8_AC3_P	8
8	IO_B66_L9_AD12_Y8_N	Y8	IO_L9N_T1L5_AD12N_66	IO_L21N_T3L5_AD8N_66	AC2	IO_B66_L21_AD8_AC2_N	8
8	IO_B66_L10_AD4_Y7_P	Y7	IO_L10P_T1U6Q_AD4P_66	IO_L22P_T3U6D_AD0P_66	AA3	IO_B66_L22_AD0_AA3_P	8
8	IO_B66_L10_AD4_AA7_N	AA7	IO_L10N_T1U7Q_AD4N_66	IO_L22N_T3U7D_AD0N_66	AB3	IO_B66_L22_AD0_AB3_N	8
8	IO_B66_L11_GC_AC8_P	AC8	IO_L11P_T1U8_GC_66	IO_L23P_T3U8_66	AB1	IO_B66_L23_AB1_P	8
8	IO_B66_L11_GC_AC7_N	AC7	IO_L11N_T1U9_GC_66	IO_L23N_T3U9_66	AC1	IO_B66_L23_AC1_N	8
8	IO_B66_L12_GC_AA8_P	AA8	IO_L12P_T1U10_GC_66	IO_L24P_T3U10_66	AA2	IO_B66_L24_AA2_P	8
8	IO_B66_L12_GC_AB8_N	AB8	IO_L12N_T1U11_GC_66	IO_L24N_T3U11_66	AA1	IO_B66_L24_AA1_N	8
		W9	IO_T1U12_66	IO_T3U12_66	Y1	IO_B66_Y1	8
				VCCO_66	AA4		
				VCCO_66	AD3		
2	VREF_B66	W10	VREF_66	VCCO_66	AD8		

VCC_B66

XILINX_ZU+_B900_GENERIC FPGA

FPGA HP Bank 65

VCCO = VCC_1V2

U200E

R400 100R

9	IO_B65_L1_AH12_P	AH12	IO_L1P_T0L0D_65	IO_L13P_T2L0Q_GC_65	AH6	CLK100_P	3
9	IO_B65_L1_AJ12_N	AJ12	IO_L1N_T0L1D_65	IO_L13N_T2L1Q_GC_65	AJ6	CLK100_N	3
9	IO_B65_L2_AF12_P	AF12	IO_L2P_T0L2_65	IO_L14P_T2L2_GC_65	AG6	DDR4PL_A0	12
9	IO_B65_L2_AF11_N	AF11	IO_L2N_T0L3_65	IO_L14N_T2L3_GC_65	AG5	DDR4PL_A1	12
9	IO_B65_L3_AD15_AG11_P	AG11	IO_L3P_T0L4_AD15P_65	IO_L15P_T2L4_AD11P_65	AK7	DDR4PL_A2	12
9	IO_B65_L3_AD15_AH11_N	AH11	IO_L3N_T0L5_AD15N_65	IO_L15N_T2L5_AD11N_65	AK6	DDR4PL_A3	12
9	IO_B65_L4_AD7_ALERT_AJ11_P	AJ11	IO_L4P_T0U6D_AD7P_ALERT_65	IO_L16P_T2U6Q_AD3P_65	AJ5	DDR4PL_CK_P	12
9	IO_B65_L4_AD7_AK11_N	AK11	IO_L4N_T0U7D_AD7N_65	IO_L16N_T2U7Q_AD3N_65	AK5	DDR4PL_CK_N	12
9	IO_B65_L5_AD14_AJ10_P	AJ10	IO_L5P_T0U8_AD14P_65	IO_L17P_T2U8_AD10P_65	AJ4	DDR4PL_A4	12
9	IO_B65_L5_AD14_AK10_N	AK10	IO_L5N_T0U9_AD14N_65	IO_L17N_T2U9_AD10N_65	AK4	DDR4PL_A5	12
9	IO_B65_L6_AD6_AF10_P	AF10	IO_L6P_T0U10_AD6P_65	IO_L18P_T2U10_AD2P_65	AF6	DDR4PL_A6	12
9	IO_B65_L6_AD6_AG10_N	AG10	IO_L6N_T0U11_AD6N_65	IO_L18N_T2U11_AD2N_65	AF5	DDR4PL_A7	12
2	DDR4PL_VRP_B65	AE10	IO_T0U12_VRP_65	IO_T2U12_65	AH4	DDR4PL_A8	12
9	IO_B65_L7_AD13_AK9_P	AK9	IO_L7P_T1L0Q_AD13P_65	IO_L19P_T3L0D_AD9P_65	AK3	DDR4PL_A9	12
9	IO_B65_L7_AD13_AK8_N	AK8	IO_L7N_T1L1Q_AD13N_65	IO_L19N_T3L1D_AD9N_65	AK2	DDR4PL_A10	12
9	IO_B65_L8_AD5_AH9_P	AH9	IO_L8P_T1L2_AD5P_65	IO_L20P_T3L2_AD1P_65	AJ2	DDR4PL_A11	12
9	IO_B65_L8_AD5_AJ9_N	AJ9	IO_L8N_T1L3_AD5N_65	IO_L20N_T3L3_AD1N_65	AJ1	DDR4PL_A12	12
12	DDR4PL_BG0	AF8	IO_L9P_T1L4_AD12P_65	IO_L21P_T3L4_AD8P_65	AH3	DDR4PL_A13	12
12	DDR4PL_BG1_A17	AF7	IO_L9N_T1L5_AD12N_65	IO_L21N_T3L5_AD8N_65	AH2	DDR4PL_A14	12
12	DDR4PL_CS#	AE9	IO_L10P_T1U6Q_AD4P_65	IO_L22P_T3U6D_AD0P_65	AG4	DDR4PL_A15	12
12	DDR4PL_CKE	AE8	IO_L10N_T1U7Q_AD4N_65	IO_L22N_T3U7D_AD0N_65	AG3	DDR4PL_A16	12
9	IO_B65_L11_GC_AG8_P	AG8	IO_L11P_T1U8_GC_65	IO_L23P_T3U8_SCLK_65	AG1	DDR4PL_ACT#	12
9	IO_B65_L11_GC_AH8_N	AH8	IO_L11N_T1U9_GC_65	IO_L23N_T3U9_65	AH1	DDR4PL_BA0	12
9	IO_B65_L12_GC_AH7_P	AH7	IO_L12P_T1U10_GC_65	IO_L24P_T3U10_SDA_65	AF3	DDR4PL_BA1	12
9	IO_B65_L12_GC_AJ7_N	AJ7	IO_L12N_T1U11_GC_65	IO_L24N_T3U11_PERSTN_65	AF2	PL_PERST#_LS	2
12	DDR4PL_RST#	AG9	IO_T1U12_65	IO_T3U12_65	AF1	DDR4PL_ODT	12
				VCCO_65	AE11		
				VCCO_65	AG7		
4	VREF_DDR4PL	AE12	VREF_65	VCCO_65	AH10		

VCC_1V2

XILINX_ZU+_B900_GENERIC FPGA

FPGA HD Bank N

VCCO = VCC_IO_BN (max 3.3V)

Bank 46 on ZU4/ZU5 | Bank 47 on ZU7

U200B

2, 8	IO_BN_L1_AD11_K12_P	K12	IO_L1P_AD11P_N	IO_L7P_HDGC_AD5P_N	E14	IO_BN_L7_HDGC_AD5_E14_P	2, 8
2, 8	IO_BN_L1_AD11_K11_N	K11	IO_L1N_AD11N_N	IO_L7N_HDGC_AD5N_N	E13	IO_BN_L7_HDGC_AD5_E13_N	2, 8
2, 8	IO_BN_L2_AD10_K13_P	K13	IO_L2P_AD10P_N	IO_L8P_HDGC_AD4P_N	D14	IO_BN_L8_HDGC_AD4_D14_P	2, 8
2, 8	IO_BN_L2_AD10_J12_N	J12	IO_L2N_AD10N_N	IO_L8N_HDGC_AD4N_N	C13	IO_BN_L8_HDGC_AD4_C13_N	2, 8
2, 8	IO_BN_L3_AD9_H13_P	H13	IO_L3P_AD9P_N	IO_L9P_AD3P_N	D12	IO_BN_L9_AD3_D12_P	2, 8
2, 8	IO_BN_L3_AD9_H12_N	H12	IO_L3N_AD9N_N	IO_L9N_AD3N_N	C12	IO_BN_L9_AD3_C12_N	2, 8
2, 8	IO_BN_L4_AD8_H14_P	H14	IO_L4P_AD8P_N	IO_L10P_AD2P_N	C14	IO_BN_L10_AD2_C14_P	2, 8
2, 8	IO_BN_L4_AD8_G14_N	G14	IO_L4N_AD8N_N	IO_L10N_AD2N_N	B14	IO_BN_L10_AD2_B14_N	2, 8
2, 8	IO_BN_L5_HDGC_AD7_G13_P	G13	IO_L5P_HDGC_AD7P_N	IO_L11P_AD1P_N	A14	IO_BN_L11_AD1_A14_P	2, 8
2, 8	IO_BN_L5_HDGC_AD7_F13_N	F13	IO_L5N_HDGC_AD7N_N	IO_L11N_AD1N_N	A13	IO_BN_L11_AD1_A13_N	2, 8
2, 8	IO_BN_L6_HDGC_AD6_F12_P	F12	IO_L6P_HDGC_AD6P_N	IO_L12P_AD0P_N	B12	IO_BN_L12_AD0_B12_P	2, 8
2, 8	IO_BN_L6_HDGC_AD6_E12_N	E12	IO_L6N_HDGC_AD6N_N	IO_L12N_AD0N_N	A12	IO_BN_L12_AD0_A12_N	2, 8
				VCCO_N	D13		
				VCCO_N	G12		

VCC_IO_BN

XILINX_ZU+_B900_GENERIC FPGA

FPGA HD Bank O

VCCO = VCC_IO_BO (max 3.3V)

Bank 45 on ZU4/ZU5 | Bank 48 on ZU7

U200C

2, 8	IO_BO_L1_AD15_L15_P	L15	IO_L1P_AD15P_O	IO_L7P_HDGC_O	E17	IO_BO_L7_HDGC_E17_P	2, 8
2, 8	IO_BO_L1_AD15_L14_N	L14	IO_L1N_AD15N_O	IO_L7N_HDGC_O	D17	IO_BO_L7_HDGC_D17_N	2, 8
2, 8	IO_BO_L2_AD14_K15_P	K15	IO_L2P_AD14P_O	IO_L8P_HDGC_O	E15	IO_BO_L8_HDGC_E15_P	2, 8
2, 8	IO_BO_L2_AD14_K14_N	K14	IO_L2N_AD14N_O	IO_L8N_HDGC_O	D15	IO_BO_L8_HDGC_D15_N	2, 8
2, 8	IO_BO_L3_AD13_J15_P	J15	IO_L3P_AD13P_O	IO_L9P_AD11P_O	D16	IO_BO_L9_AD11_D16_P	2, 8
2, 8	IO_BO_L3_AD13_J14_N	J14	IO_L3N_AD13N_O	IO_L9N_AD11N_O	C16	IO_BO_L9_AD11_C16_N	2, 8
2, 8	IO_BO_L4_AD12_J16_P	J16	IO_L4P_AD12P_O	IO_L10P_AD10P_O	C17	IO_BO_L10_AD10_C17_P	2, 8
2, 8	IO_BO_L4_AD12_H16_N	H16	IO_L4N_AD12N_O	IO_L10N_AD10N_O	B16	IO_BO_L10_AD10_B16_N	2, 8
2, 8	IO_BO_L5_HDGC_G16_P	G16	IO_L5P_HDGC_O	IO_L11P_AD9P_O	A17	IO_BO_L11_AD9_A17_P	2, 8
2, 8	IO_BO_L5_HDGC_G15_N	G15	IO_L5N_HDGC_O	IO_L11N_AD9N_O	A16	IO_BO_L11_AD9_A16_N	2, 8
2, 8	IO_BO_L6_HDGC_F16_P	F16	IO_L6P_HDGC_O	IO_L12P_AD8P_O	B15	IO_BO_L12_AD8_B15_P	2, 8
2, 8	IO_BO_L6_HDGC_F15_N	F15	IO_L6N_HDGC_O	IO_L12N_AD8N_O	A15	IO_BO_L12_AD8_A15_N	2, 8
				VCCO_O	E16		
				VCCO_O	H15		

VCC_IO_BO

XILINX_ZU+_B900_GENERIC FPGA

ENCLUSTRA FPGA SOLUTIONS	Project	ME-XU8.PrjPcb	Sheet Name	ME-XU8_P04_FPGA_IO_BANKS.SchDoc	Customer No 0000	Revision R3.0	DNE = Do Not Equip	Confidential
	Company	Enclustra FPGA Solutions	Copyright	© 2022 by Enclustra GmbH Switzerland	Project No 506	Designed MHEI	Date 26 Oct 2022	Sheet/sheets 4 / 23

FPGA PS DDR Bank 504

VCCO = VCC_1V2

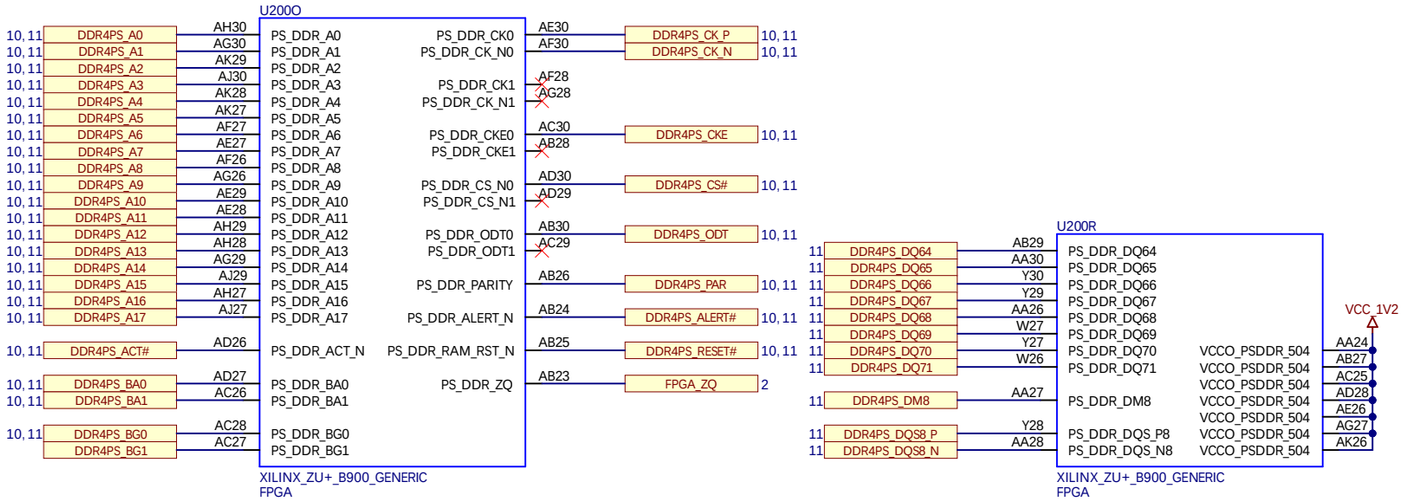

FPGA PS Bank 500

VCCO = VCC_1V8

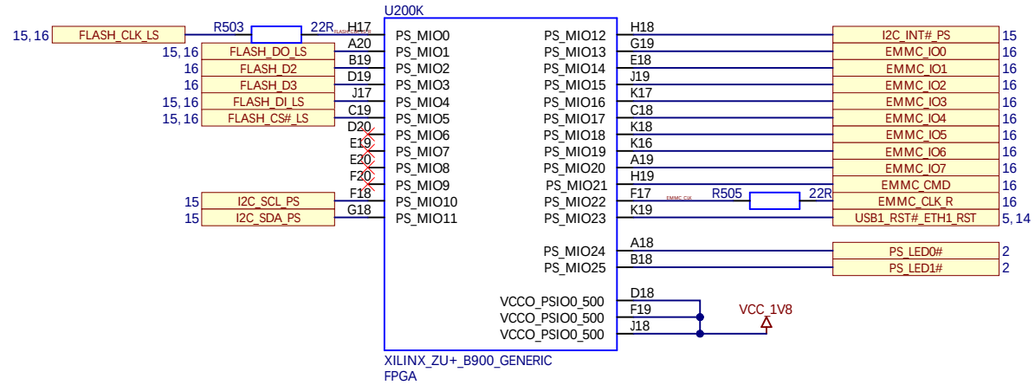

FPGA PS Bank 501

VCCO = VCC_CFG_MIO

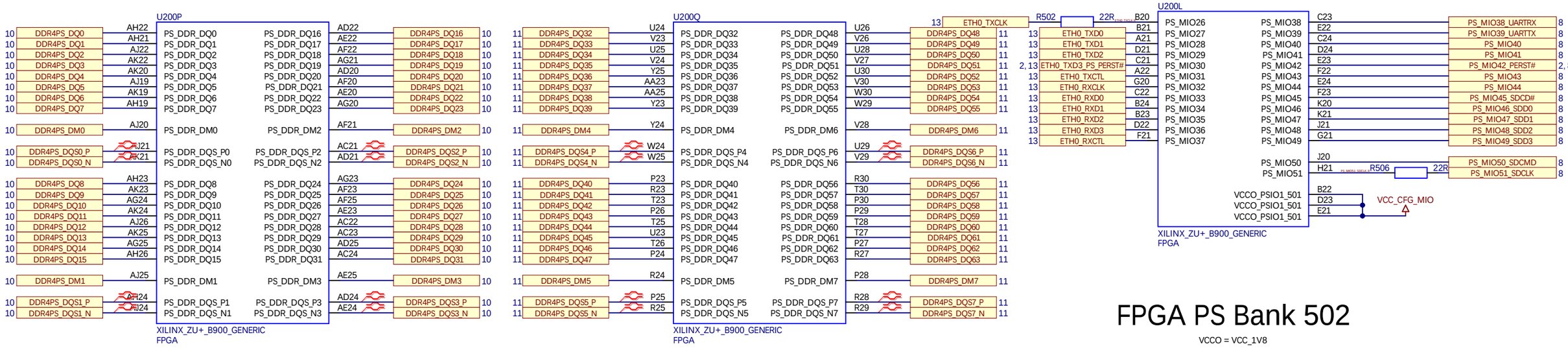

FPGA PS Bank 502

VCCO = VCC_1V8

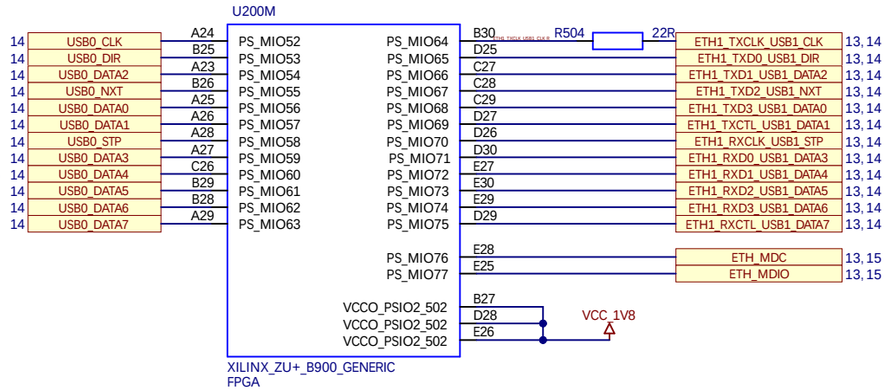

USB1/ETH1 Selection

default is ETH1 enabled, USB1 in reset

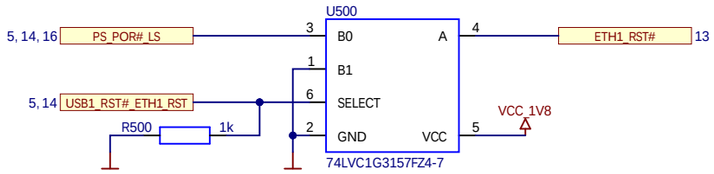

Reset Circuit

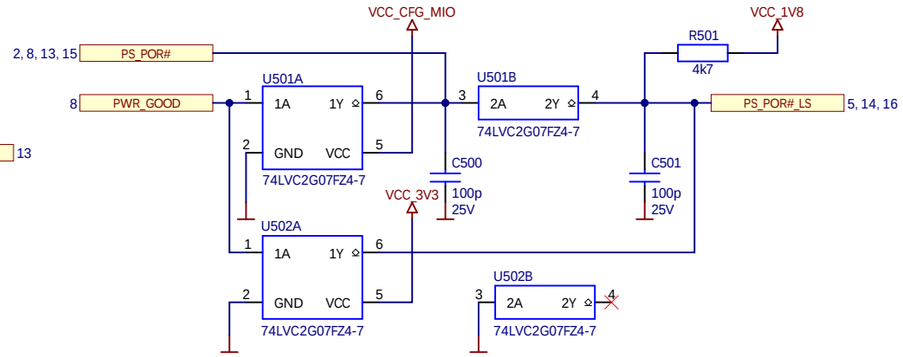

ENCLUSTRA FPGA SOLUTIONS	Project ME-XU8.PrjPcb	Sheet Name ME-XU8_P05_FPGA_PS_BANKS.SchDoc	Customer No 0000	Revision R3.0	DNE = Do Not Equip	Confidential
	Company Enclustra FPGA Solutions	Copyright © 2022 by Enclustra GmbH Switzerland	Project No 506	Designed MHEI	Date 26 Oct 2022	Sheet/sheets 5 / 23

FPGA Ground

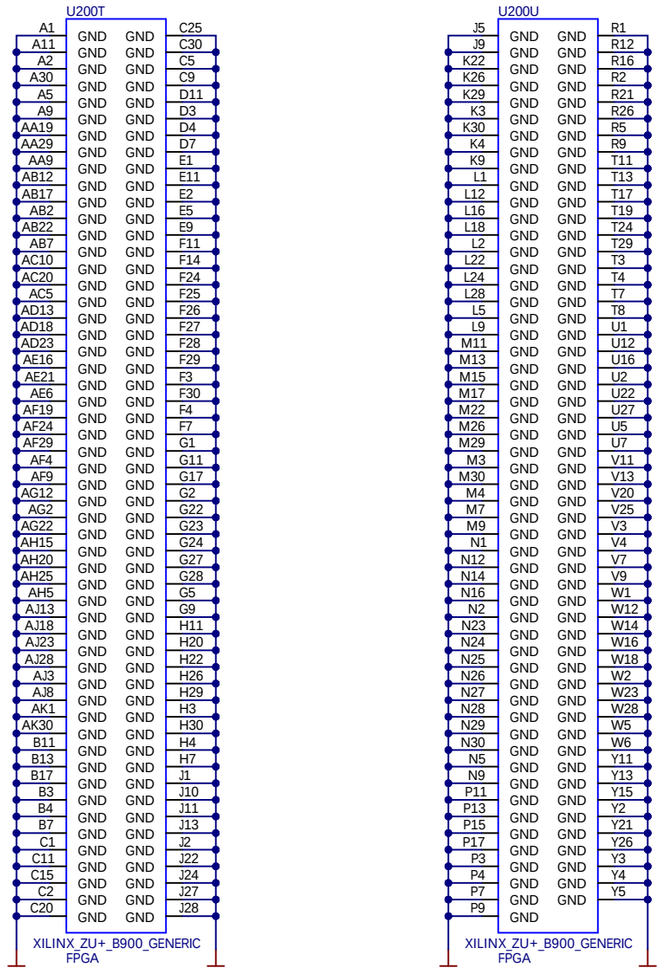

FPGA MGT Power

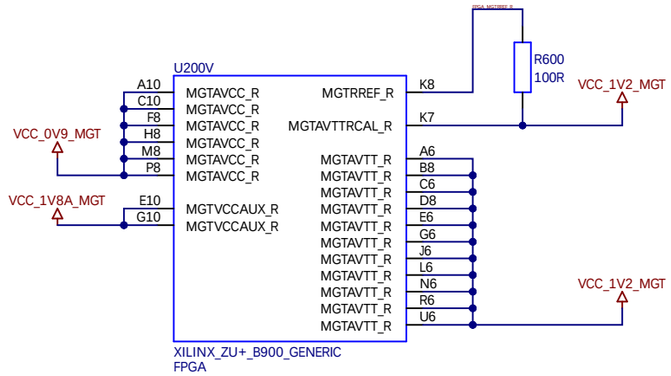

ADC Power

not included in user schematics

FPGA GTR Power

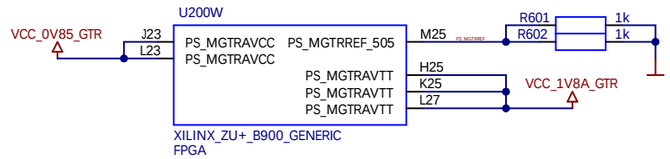

FPGA Power

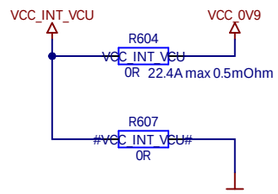

MGT Power Filters

not included in user schematics

PLL and GTR Power Filters

not included in user schematics

FPGA Power

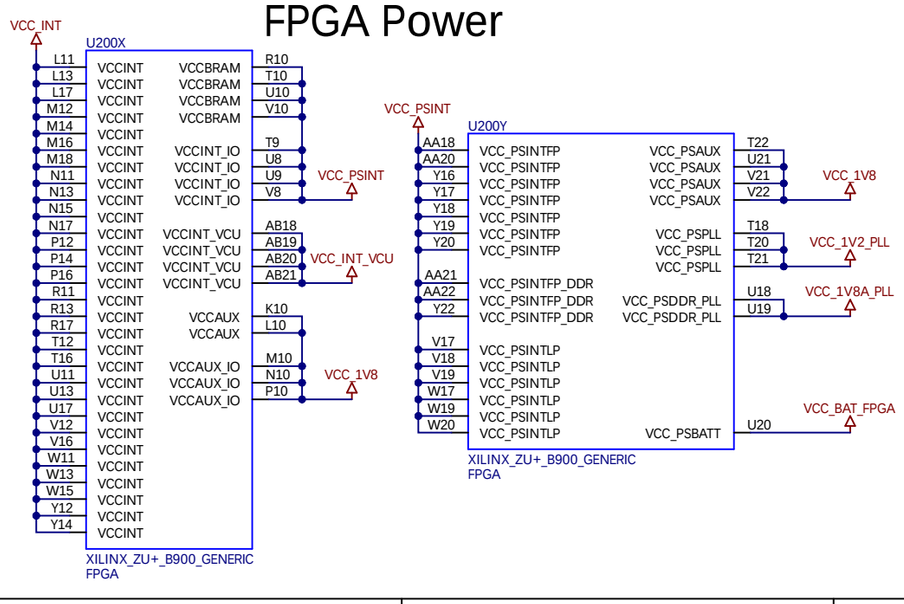

ENCLUSTRA FPGA SOLUTIONS	Project ME-XU8.PrjPcb	Sheet Name ME-XU8_P06_FPGA_POWER.SchDoc	Customer No 0000	Revision R3.0	DNE = Do Not Equip	Confidential
	Company Enclustra FPGA Solutions	Copyright © 2022 by Enclustra GmbH Switzerland	Project No 506	Designed MHEI	Date 26 Oct 2022	Sheet/sheets 6 / 23

FPGA Decoupling

not included in user schematics

Power Decoupling

not included in user schematics

ENCLUSTRA FPGA SOLUTIONS	Project ME-XU8.PrjPcb	Sheet Name ME-XU8_P07_POWER_DECOUPLING.SchDoc	Customer No 0000	Revision R3.0	DNE = Do Not Equip	Confidential
	Company Enclustra FPGA Solutions	Copyright © 2022 by Enclustra GmbH Switzerland	Project No 506	Designed MHEI	Date 26 Oct 2022	Sheet/sheets 7 / 23

Module Connector A

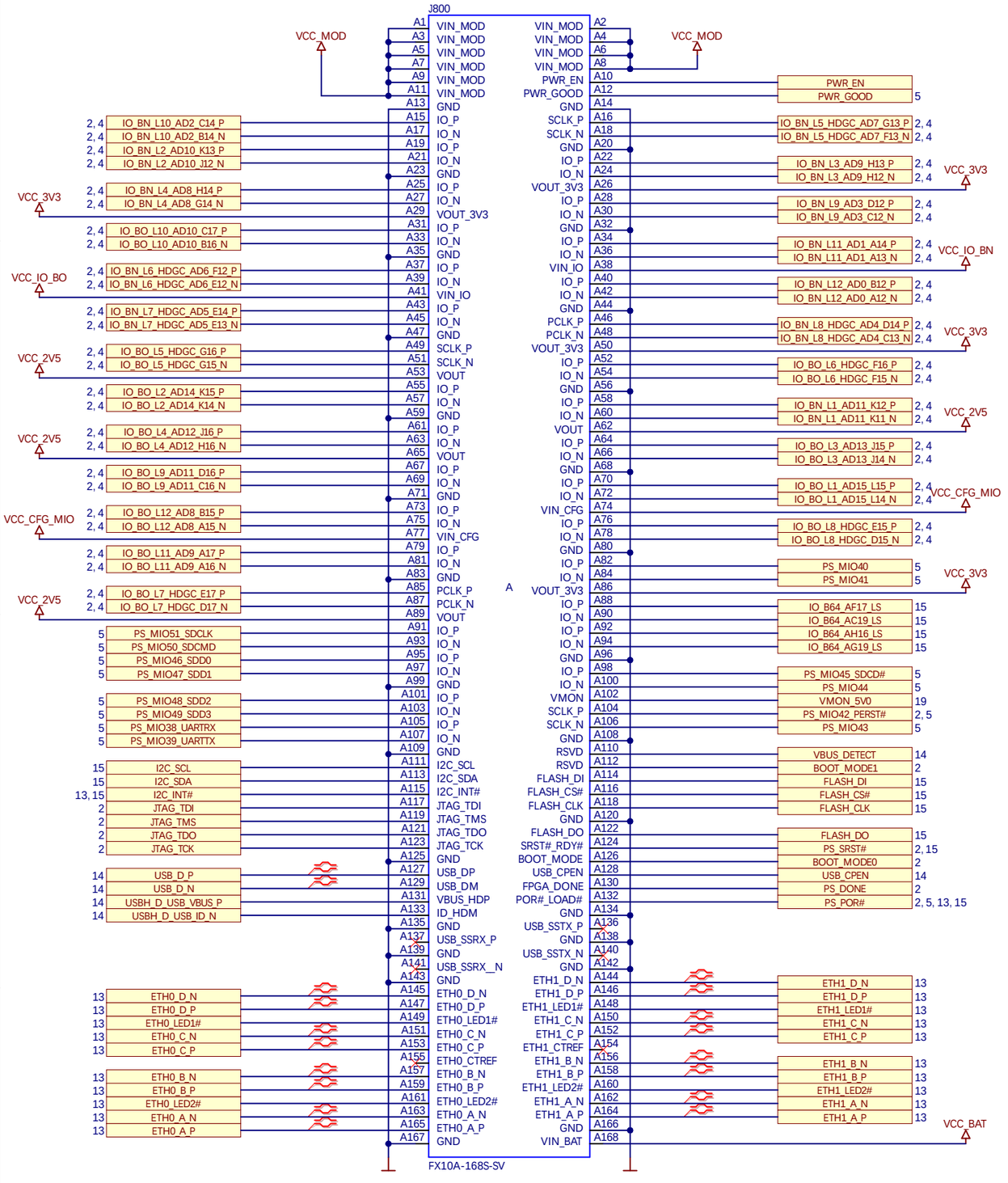

Module Connector B

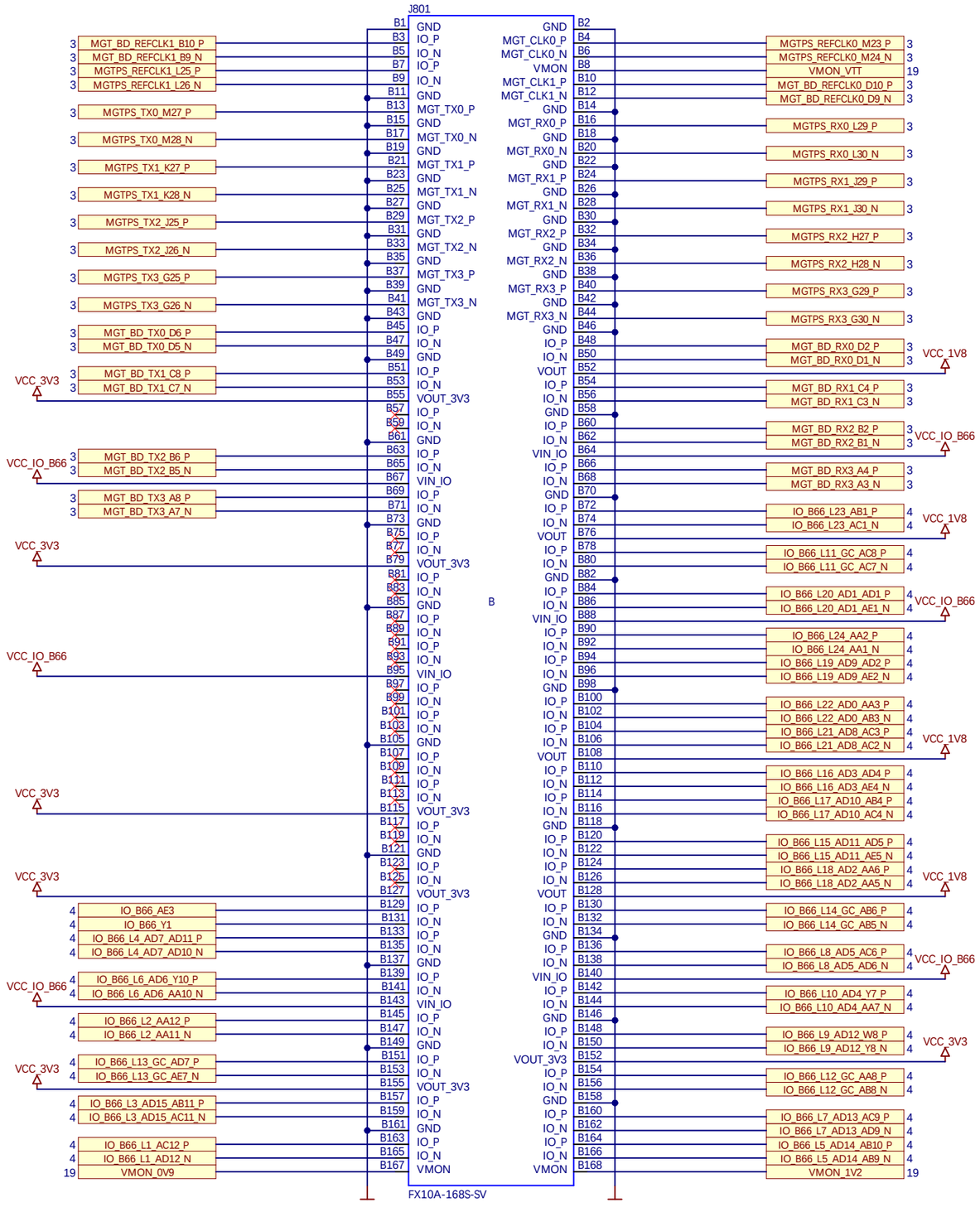

ENCLUSTRA FPGA SOLUTIONS	Project ME-XU8.PrjPcb	Sheet Name ME-XU8_P08_MODULE_CONNECTORS_A_B.SchDoc	Customer No 0000	Revision R3.0	DNE = Do Not Equip	Confidential
	Company Enclustra FPGA Solutions	Copyright © 2022 by Enclustra GmbH Switzerland	Project No 506	Designed MHEI	Date 26 Oct 2022	Sheet/sheets 8 / 23

Module Connector C

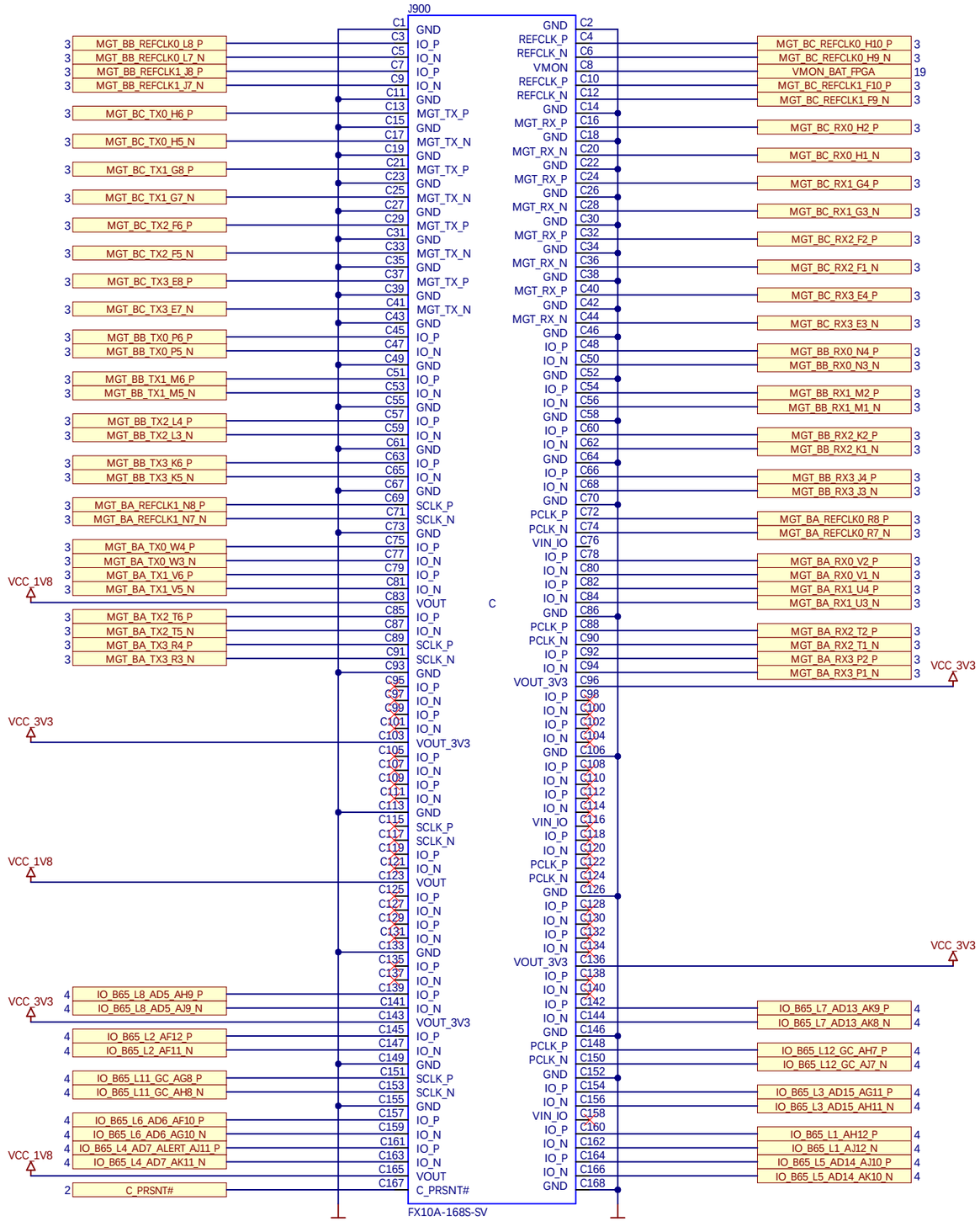

ENCLUSTRA FPGA SOLUTIONS	Project ME-XU8.PrjPcb	Sheet Name ME-XU8_P09_MODULE_CONNECTOR_C.SchDoc	Customer No 0000	Revision R3.0	DNE = Do Not Equip	Confidential
	Company Enclustra FPGA Solutions	Copyright © 2022 by Enclustra GmbH Switzerland	Project No 506	Designed MHEI	Date 26 Oct 2022	Sheet/sheets 9 / 23

PS DDR4 SDRAM

Bytes 0-1

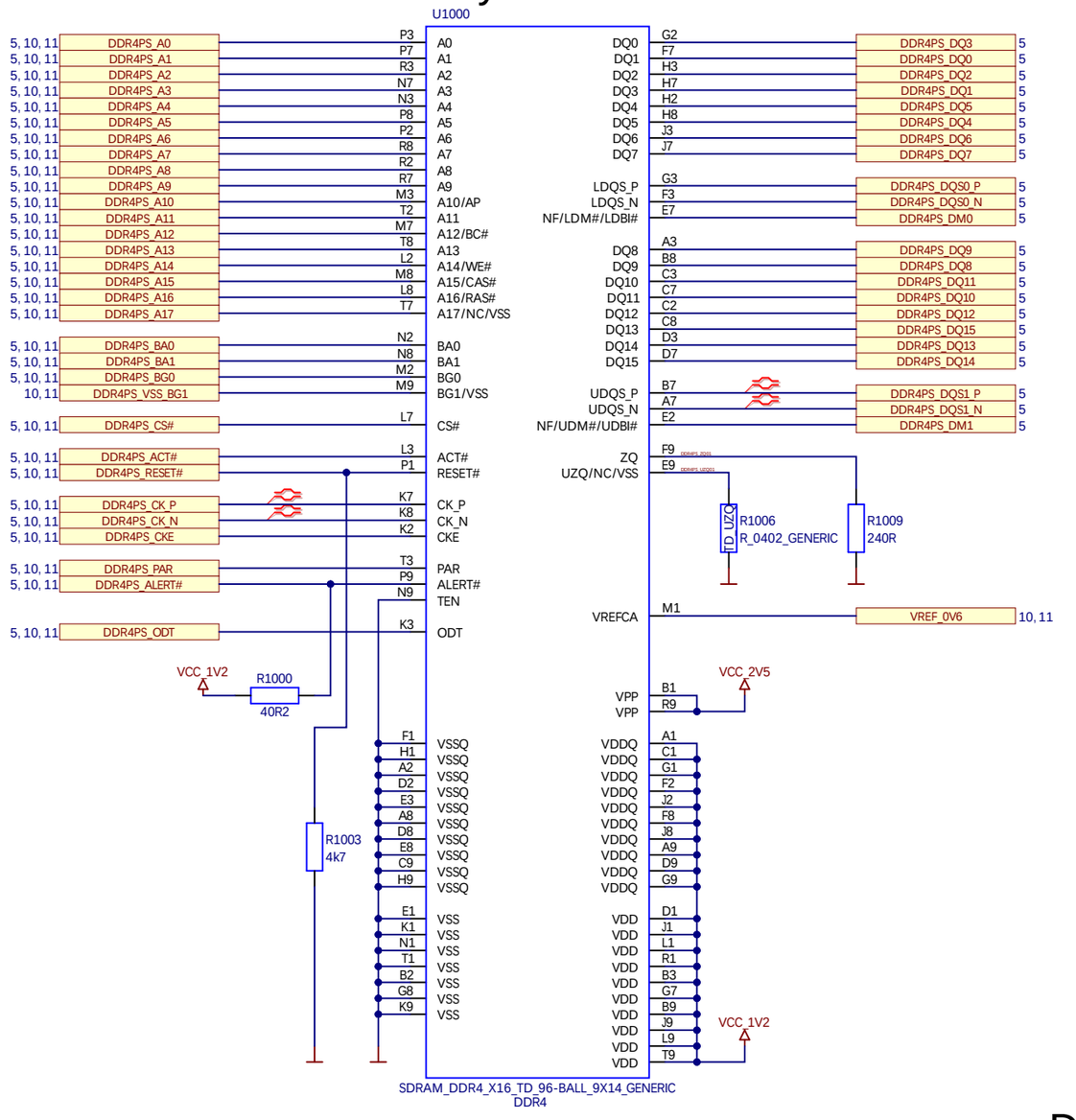

Bytes 2-3

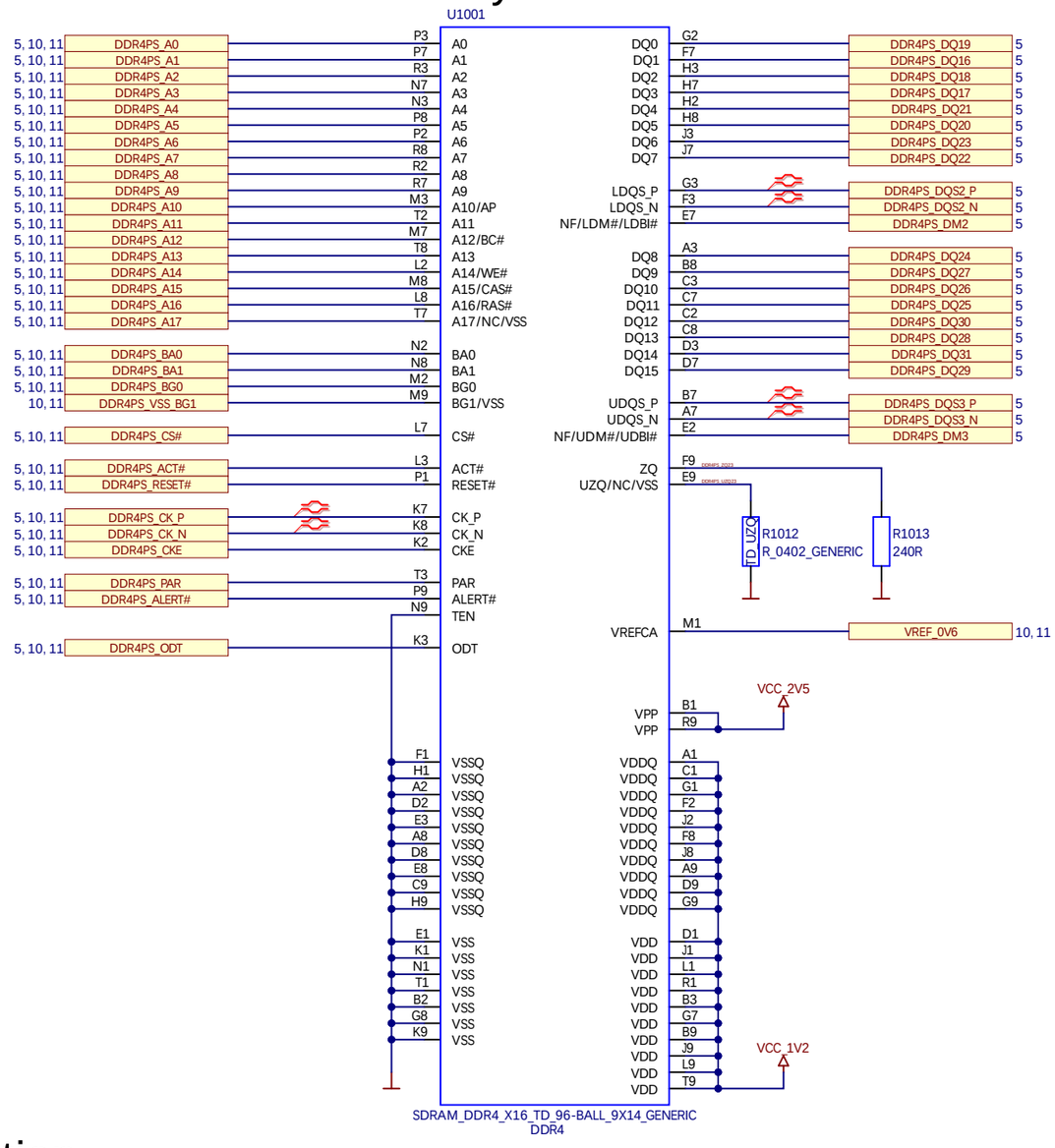

DDR4 Termination

not included in user schematics

ENCLUSTRA FPGA SOLUTIONS	Project ME-XU8.PrjPcb	Sheet Name ME-XU8_P10_PS_DDR4_SDRAM_0-3.SchDoc	Customer No 0000	Revision R3.0	DNE = Do Not Equip	Confidential
	Company Enclustra FPGA Solutions	Copyright © 2022 by Enclustra GmbH Switzerland	Project No 506	Designed MHEI	Date 26 Oct 2022	Sheet/sheets 10 / 23

PS DDR4 SDRAM

Bytes 4-5

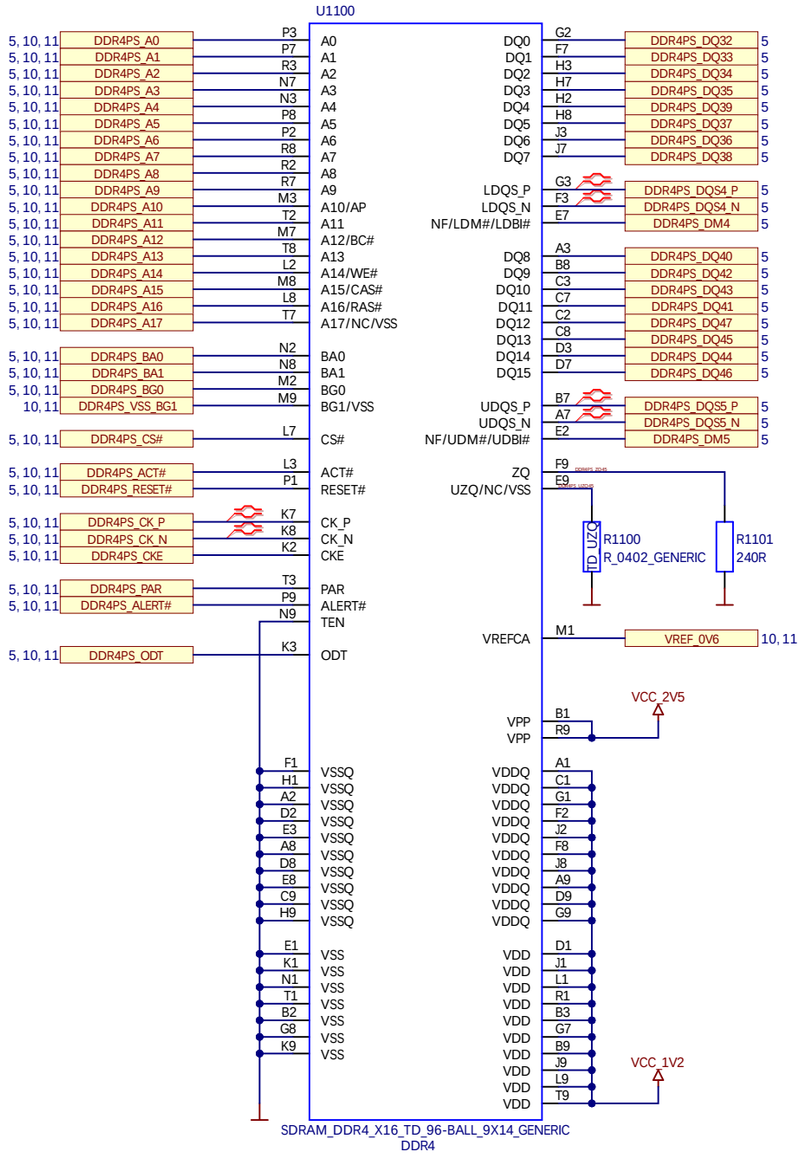

Bytes 6-7

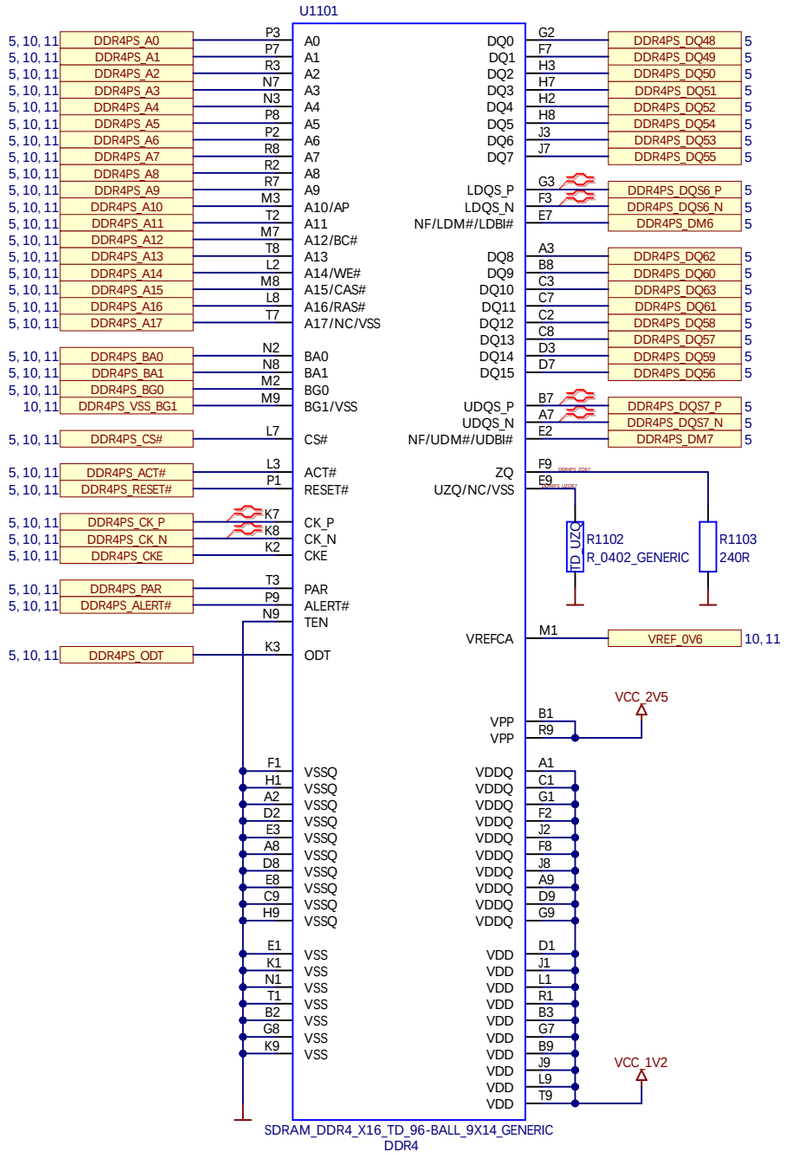

Byte 8 (ECC)

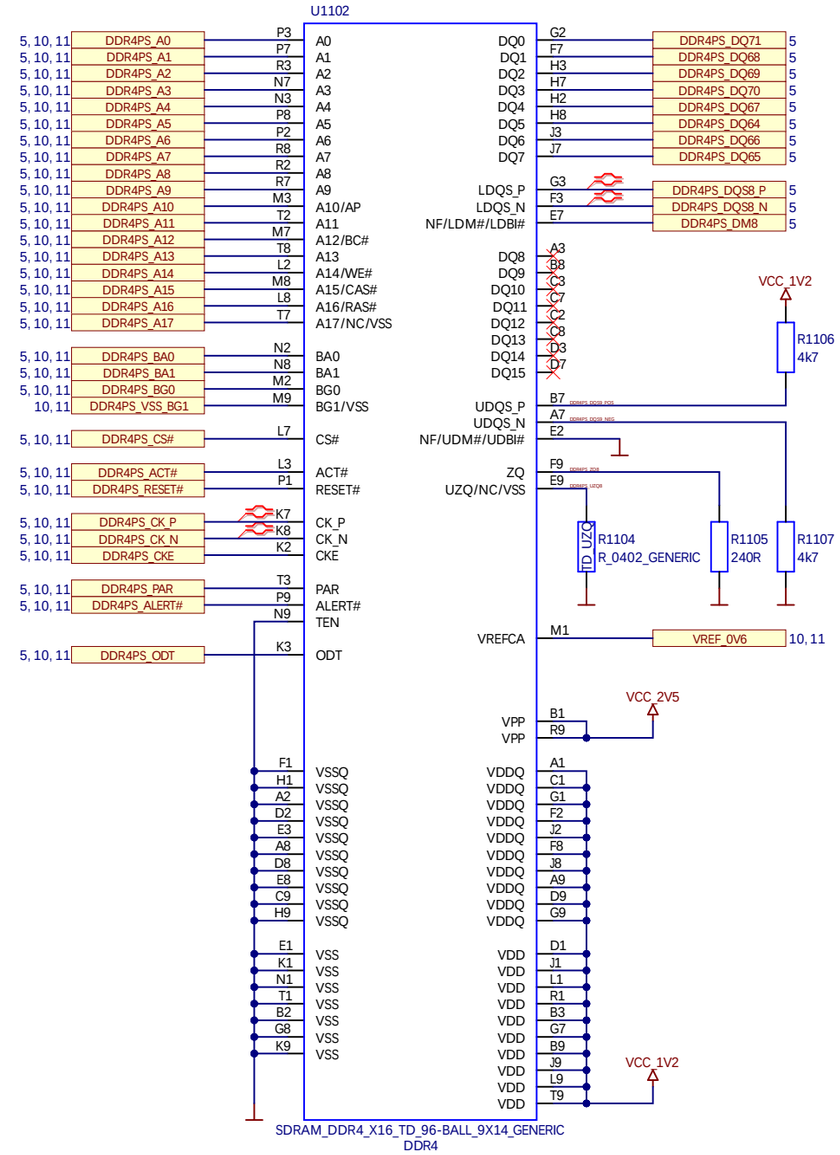

DDR4 Decoupling

not included in user schematics

ENCLUSTRA FPGA SOLUTIONS	Project ME-XU8.PrjPcb	Sheet Name ME-XU8_P11_PS_DDR4_SDRAM_4-8.SchDoc	Customer No 0000	Revision R3.0	DNE = Do Not Equip	Confidential
	Company Enclustra FPGA Solutions	Copyright © 2022 by Enclustra GmbH Switzerland	Project No 506	Designed MHEI	Date 26 Oct 2022	Sheet/sheets 11 / 23

PL DDR4 SDRAM Bytes 0-1

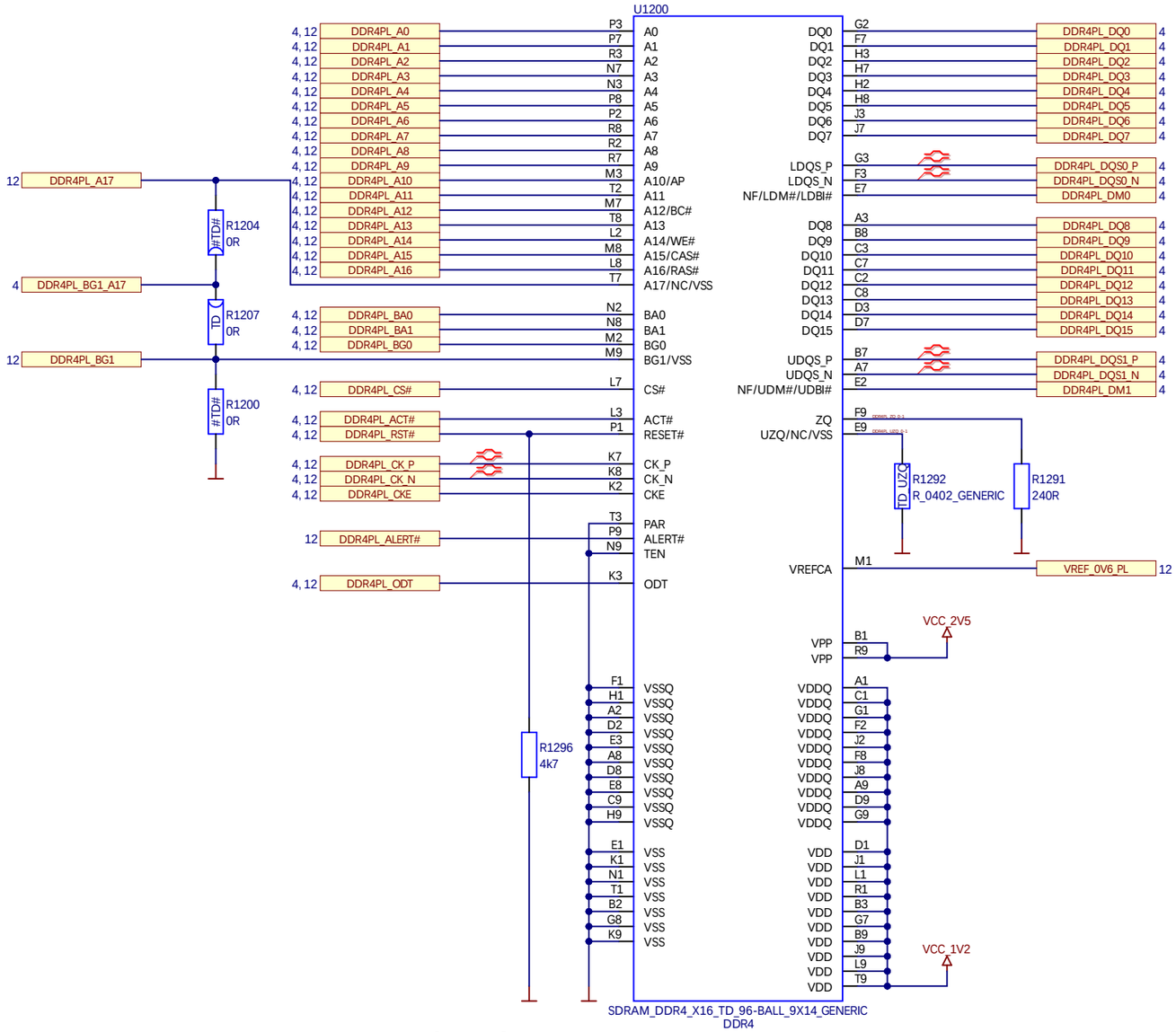

PL DDR4 SDRAM Bytes 2-3

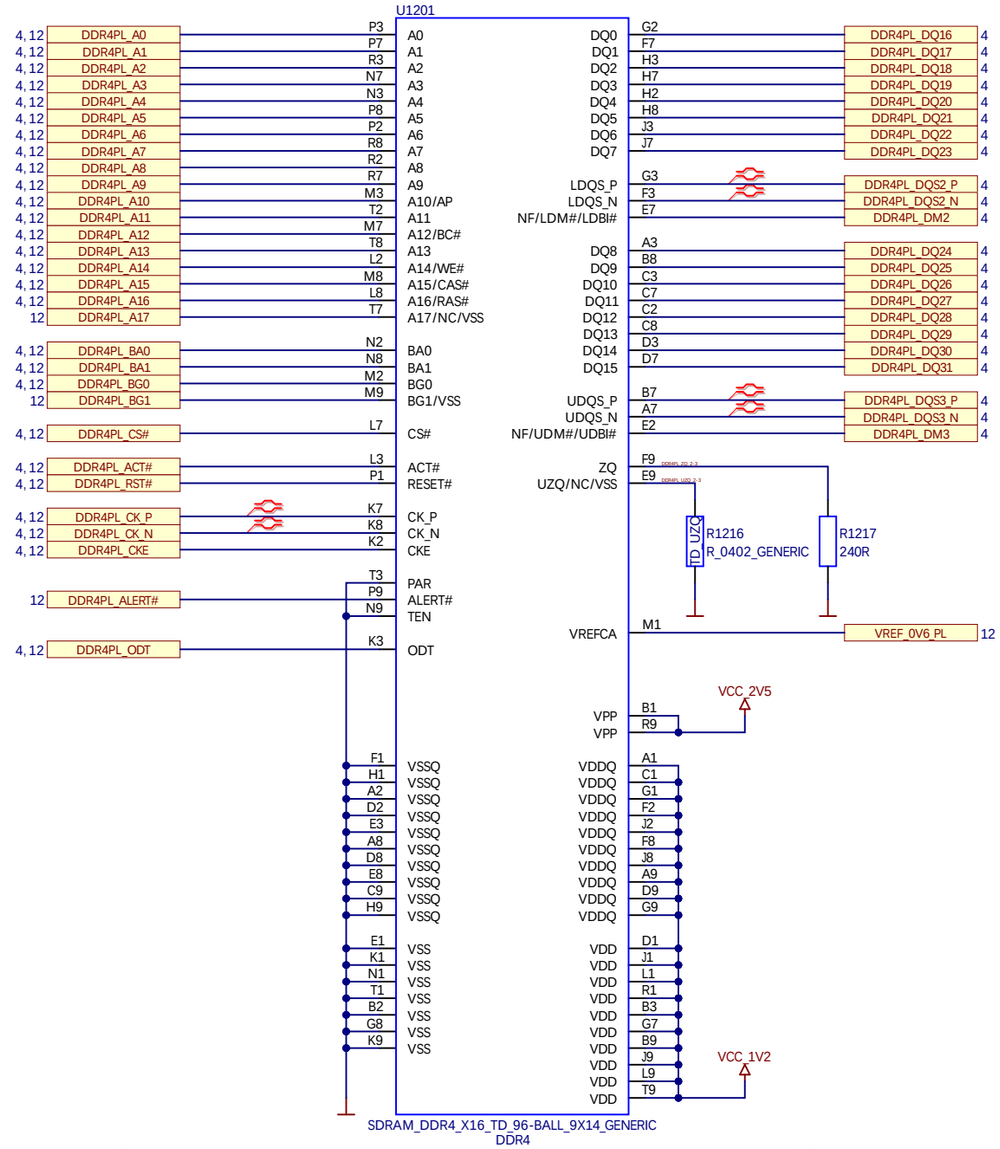

DDR4 Termination

not included in user schematics

PL DDR4 Reference Voltage

not included in user schematics

PL DDR4 Decoupling

not included in user schematics

ENCLUSTRA FPGA SOLUTIONS	Project ME-XU8.PrjPcb	Sheet Name ME-XU8_P12_PL_DDR4_SDRAM.SchDoc	Customer No 0000	Revision R3.0	DNE = Do Not Equip	Confidential
	Company Enclustra FPGA Solutions	Copyright © 2022 by Enclustra GmbH Switzerland	Project No 506	Designed MHEI	Date 26 Oct 2022	Sheet/sheets 12 / 23

Gigabit Ethernet PHY 0

not available when using PS PCIe

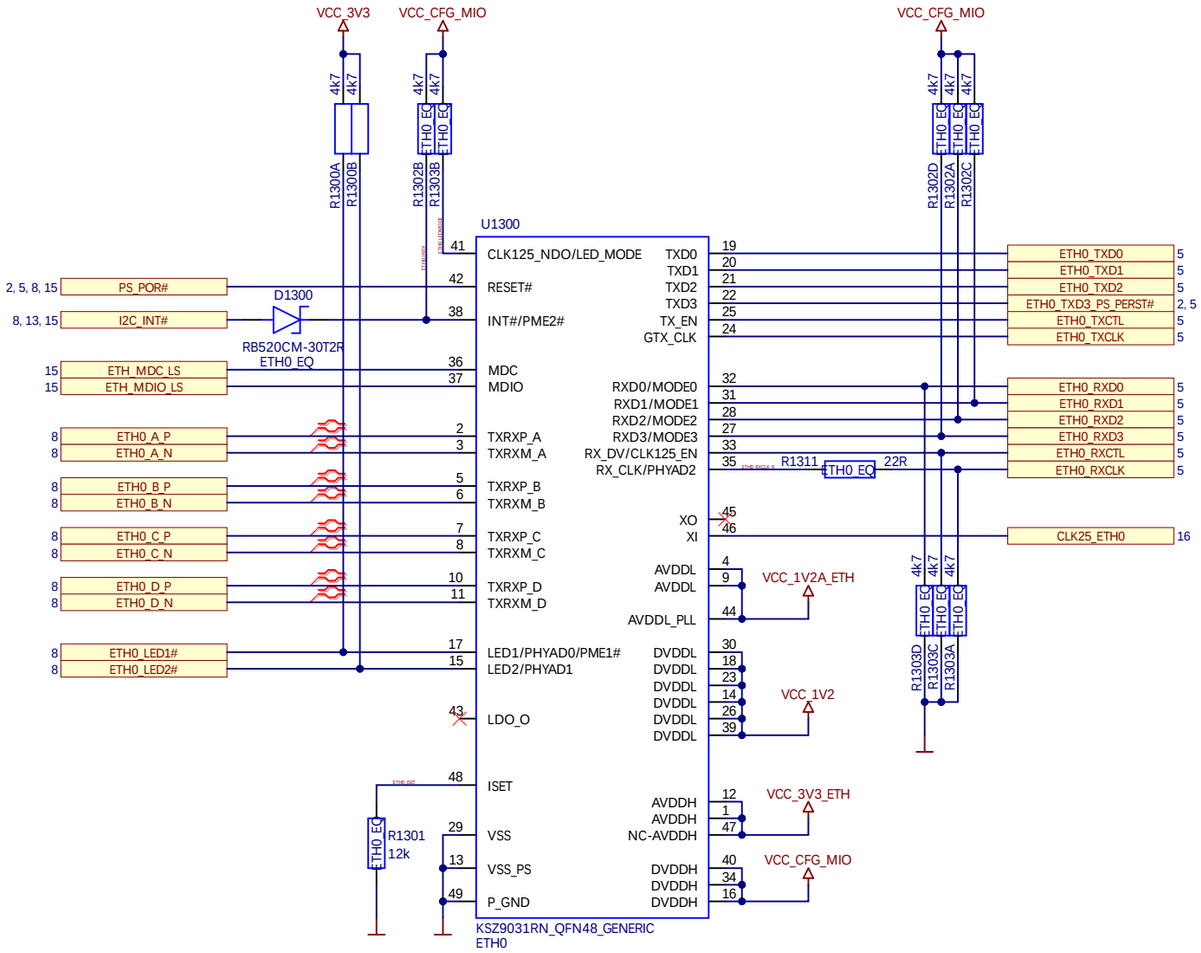

MODE<3:0> = 1110 -> RGMII, all capabilities

LED_Mode Pull up = Single LED

PhyAddress <2:0> = 011 -> 3

LED1 and LED2 are active low

Gigabit Ethernet PHY 1

not available when using USB1

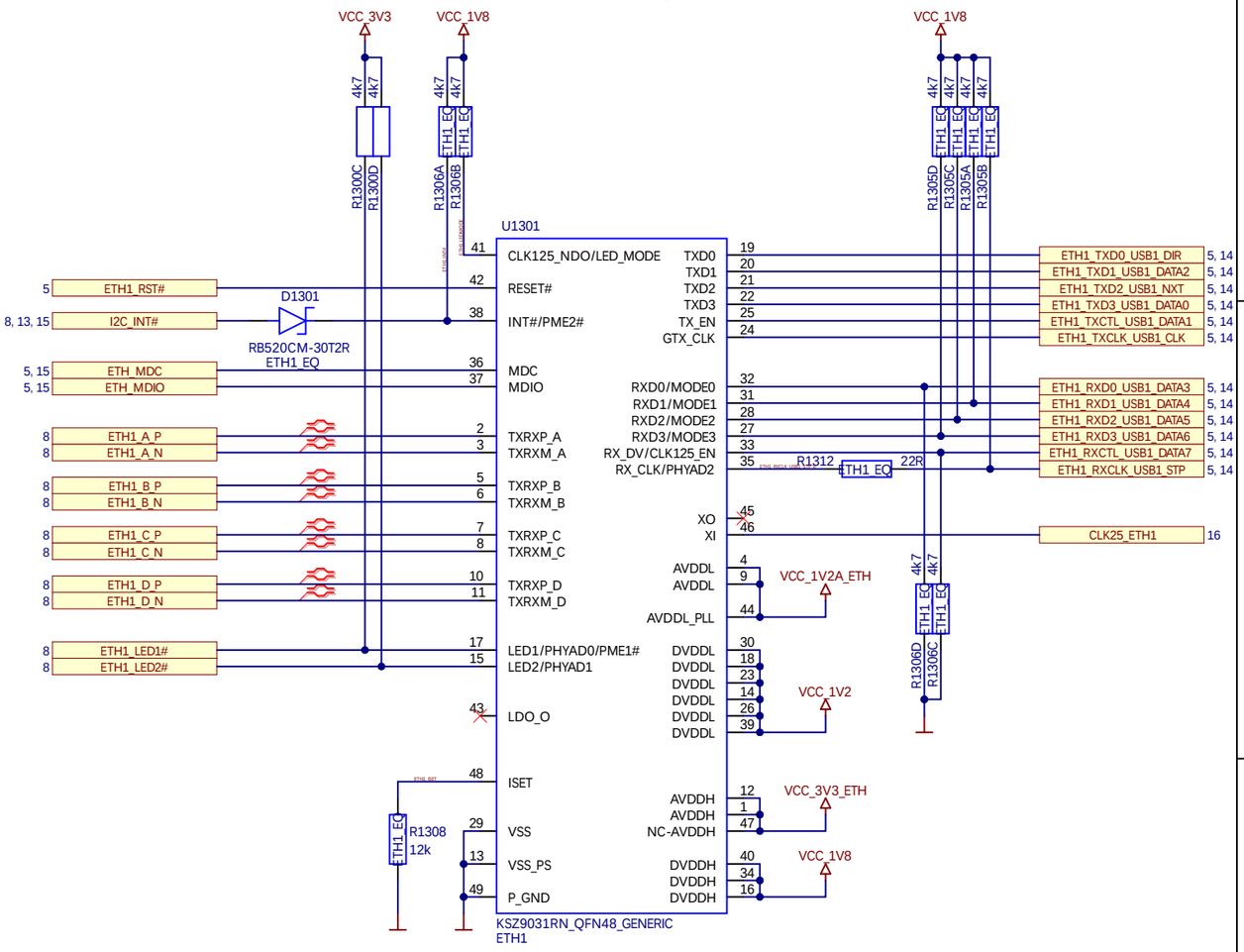

MODE<3:0> = 1110 -> RGMII, all capabilities

LED_Mode Pull up = Single LED

PhyAddress <2:0> = 111 -> 7

LED1 and LED2 are active low

Ethernet Power Filters

not included in user schematics

ENCLUSTRA FPGA SOLUTIONS	Project ME-XU8.PrjPcb	Sheet Name ME-XU8_P13_GIGABIT_ETHERNET_PHYS.SchDoc	Customer No 0000	Revision R3.0	DNE = Do Not Equip	Confidential
	Company Enclustra FPGA Solutions	Copyright © 2022 by Enclustra GmbH Switzerland	Project No 506	Designed MHEI	Date 26 Oct 2022	Sheet/sheets 13 / 23

USB 2.0 Device/Host PHY 0

A-Device ID=GND, B-Device ID=Float, Not Used ID=VDD33

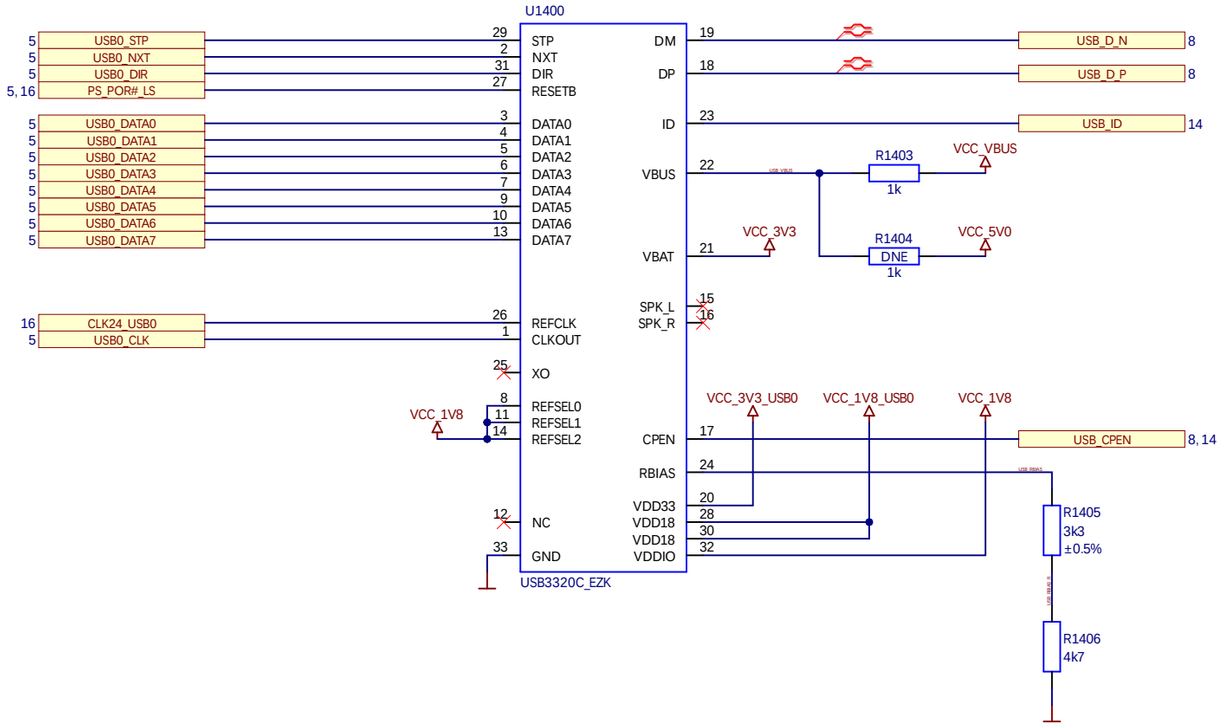

USB 2.0 Host PHY 1

not available when using Ethernet 1

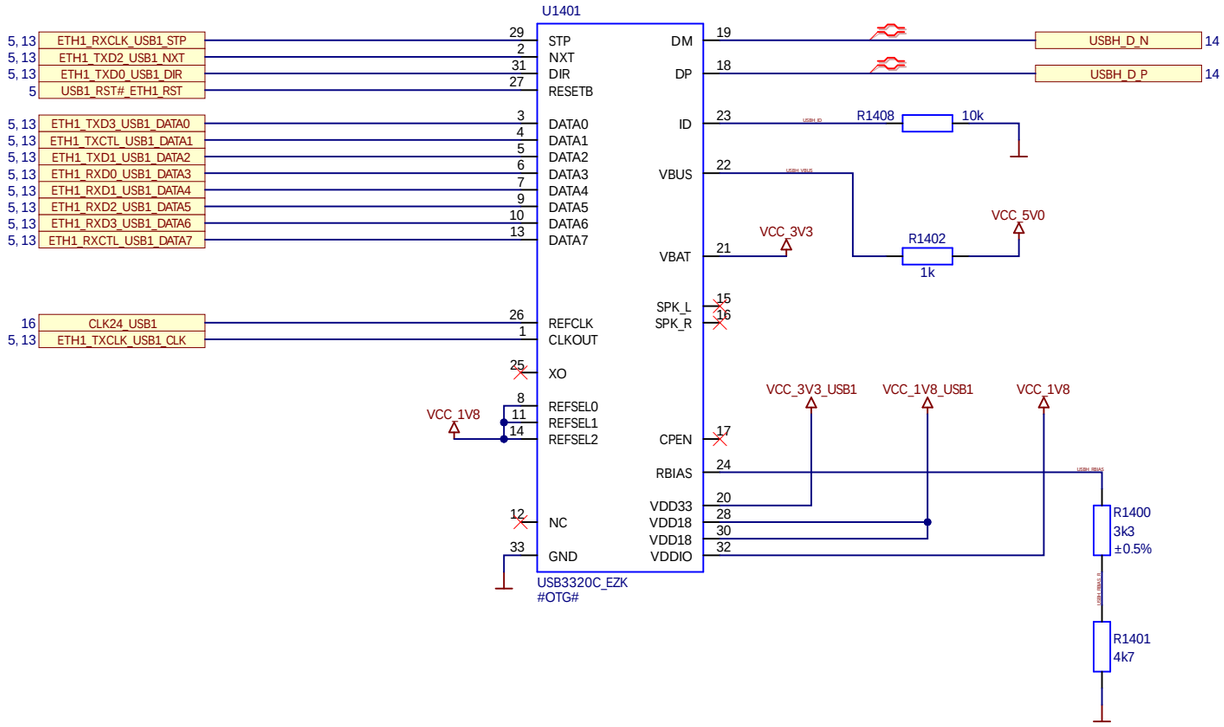

USB 2.0 Host/Device Mode

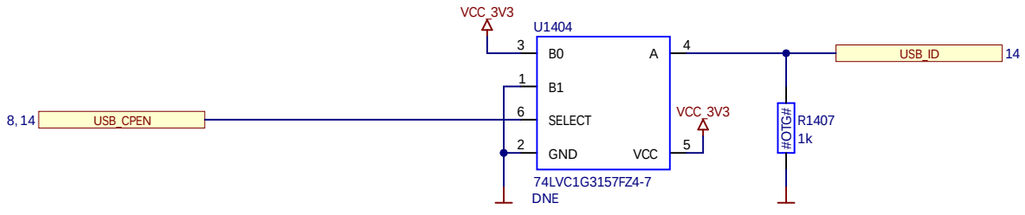

USB PHY 0 - OTG Assembly Option

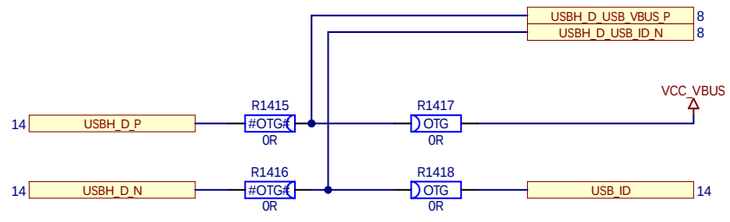

USB 2.0 VBUS Detect

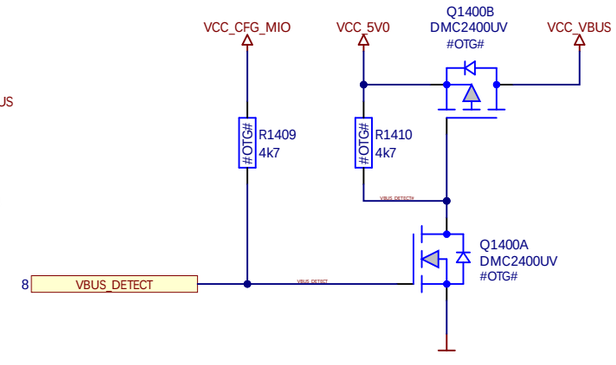

USB 2.0 Power Decoupling

not included in user schematics

ENCLUSTRA FPGA SOLUTIONS	Project ME-XU8.PrjPcb	Sheet Name ME-XU8_P14_USB2_PHYS.SchDoc	Customer No 0000	Revision R3.0	DNE = Do Not Equip	Confidential
	Company Enclustra FPGA Solutions	Copyright © 2022 by Enclustra GmbH Switzerland	Project No 506	Designed MHEI	Date 26 Oct 2022	Sheet/sheets 14 / 23

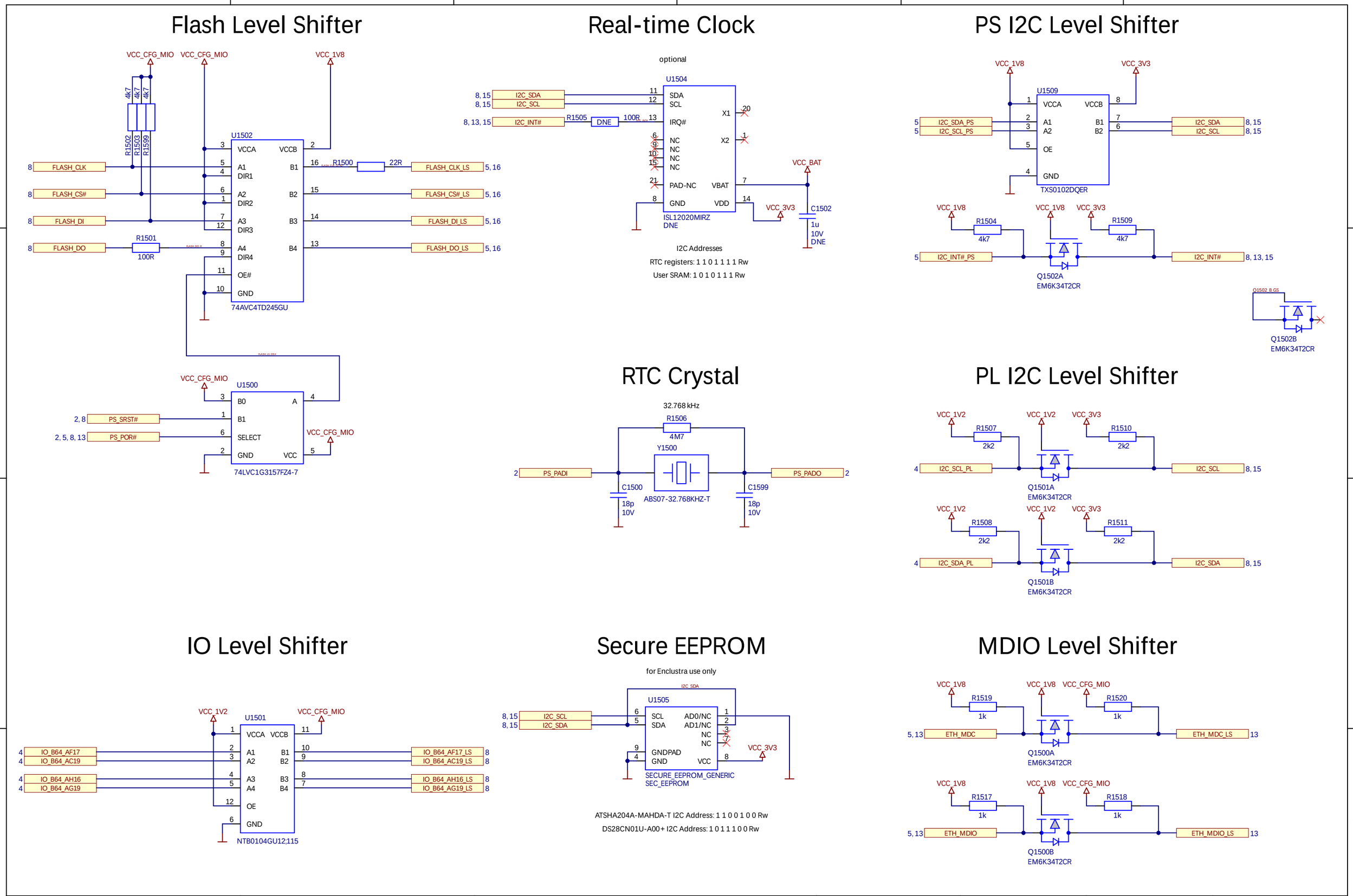

ENCLUSTRA FPGA SOLUTIONS	Project ME-XU8.PrjPcb	Sheet Name ME-XU8_P15_LEVEL_SHIFTERS_EEPROM.SchDoc	Customer No 0000	Revision R3.0	DNE = Do Not Equip	Confidential
	Company Enclustra FPGA Solutions	Copyright © 2022 by Enclustra GmbH Switzerland	Project No 506	Designed MHEI	Date 26 Oct 2022	Sheet/sheets 15 / 23

Quad SPI Flash

pin compatible with Micron N25Q512A11G1240F

Micron requires VCC_FLASH = 1.8V

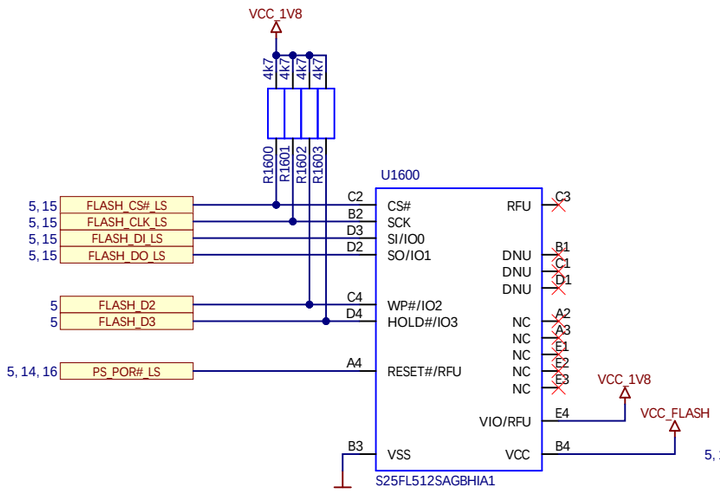

eMMC Flash

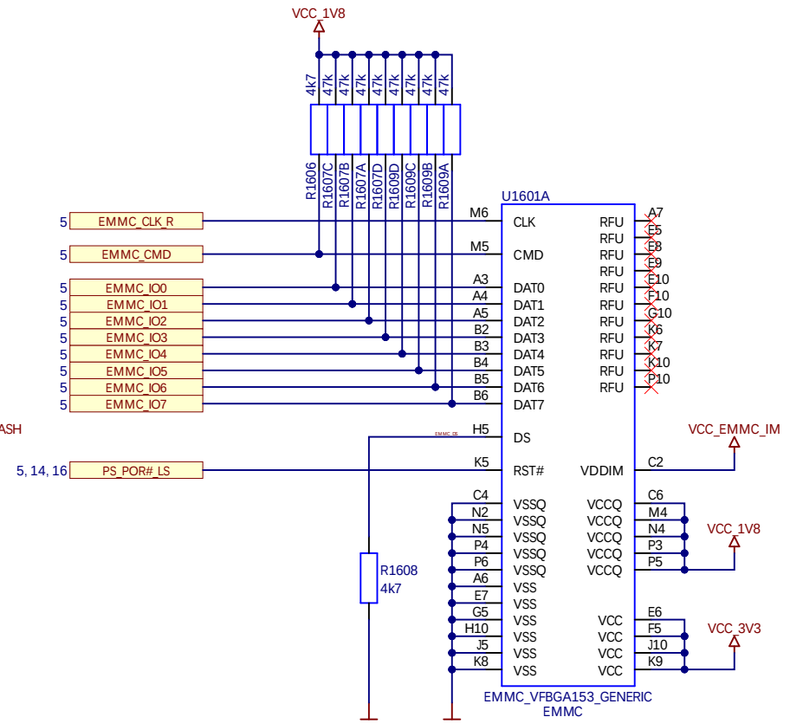

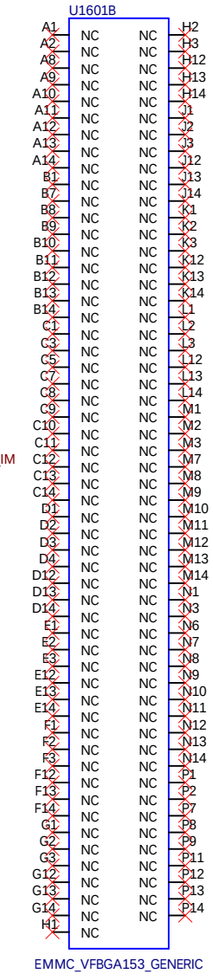

PS 33.3 MHz Oscillator

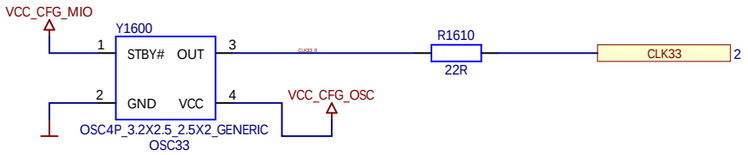

ETH 25 MHz Oscillator

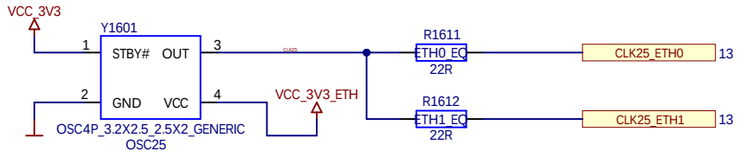

USB 24 MHz Oscillator

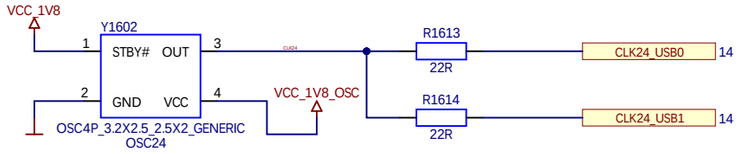

Oscillator Power Filters

not included in user schematics

Quad SPI Power

not included in user schematics

eMMC Power

not included in user schematics

ENCLUSTRA FPGA SOLUTIONS	Project ME-XU8.PrjPcb	Sheet Name ME-XU8_P16_EMMC_QSPI_FLASH_OSC.SchDoc	Customer No 0000	Revision R3.0	DNE = Do Not Equip	Confidential
	Company Enclustra FPGA Solutions	Copyright © 2022 by Enclustra GmbH Switzerland	Project No 506	Designed MHEI	Date 26 Oct 2022	Sheet/sheets 16 / 23

3.3V Buck Converter

3.3V 6A 5%

not included in user schematics

FS=800kHz Vfb = 0.6V

1.2V Buck Converter

1.2V 6A 3%

not included in user schematics

FS=800kHz Vfb = 0.6V

Buck Converter

0.72/0.85/0.9V 35A 3%

not included in user schematics

FS=600kHz Vfb = 0.6V

Supported Voltage Ranges

Power Rail	Direction	Range	Tolerance
VCC_MOD	input	5 - 15V	±5%
VCC_CFG_MIO	input	1.8 - 3.3V	±5%
VCC_IO_BN	input	1.2 - 3.3V	±5%
VCC_IO_BO	input	1.2 - 3.3V	±5%
VCC_IO_B66	input	1.0 - 1.8V	±5%
VCC_BAT	input	2.0 - 5.5V *	-
VCC_1V8	output	1.8V	±5%
VCC_2V5	output	2.5V	±5%
VCC_3V3	output	3.3V	±5%

When using VCC_IO_BN, VCC_IO_BO at 3.3V, the tolerance is -5% +3%.

* Voltage range valid for LDO assembly option for VCC_BAT_FPGA (default assembly variant).

Input Power Filter

not included in user schematics

LDO 5.0V 0.15A

not included in user schematics

Buck Converter

0.85/0.9V 6A 3%
not included in user schematics
FS=800kHz Vfb = 0.6V

LDO 2.5V 0.5A

not included in user schematics

Buck Converter

0.9V 6A 3%
not included in user schematics
FS=800kHz Vfb = 0.6V

DDR4 Termination Voltage Regulator

not included in user schematics

Power Sequencing

not included in user schematics

DDR4 VREF Decoupling

not included in user schematics

ENCLUSTRA FPGA SOLUTIONS	Project ME-XU8.PrjPcb	Sheet Name ME-XU8_P18_POWER_PSINT_0.9V_2.5V_VTT.SchDoc	Customer No 0000	Revision R3.0	DNE = Do Not Equip	Confidential
	Company Enclustra FPGA Solutions	Copyright © 2022 by Enclustra GmbH Switzerland	Project No 506	Designed MHEI	Date 26 Oct 2022	Sheet/sheets 18 / 23

Buck Converter 1.8V

1.8V 3A 3%
not included in user schematics
Fs = 800kHz Vfb = 0.6V

LDO 1.5V 10 mA

not included in user schematics

Voltage Monitoring

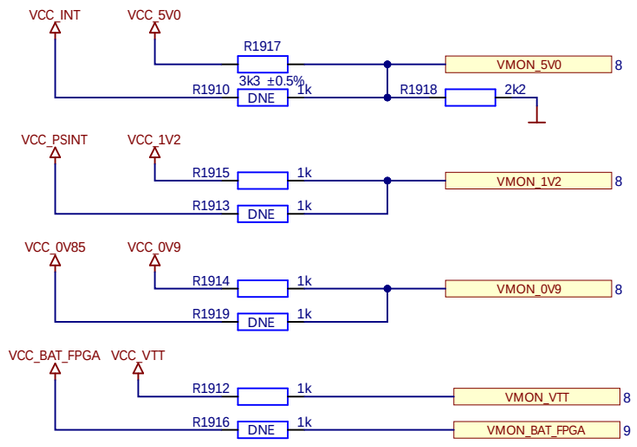

FPGA I/O Over-Voltage Protection

not included in user schematics

LDO 0.85V 0.5A

used for -1LE, -2LI, -3E speed grade SoC FPGAs
not included in user schematics

Voltage Reference

not included in user schematics

ENCLUSTRA FPGA SOLUTIONS	Project ME-XU8.PrjPcb	Sheet Name ME-XU8_P19_POWER_1.8V_0V85.SchDoc	Customer No 0000	Revision R3.0	DNE = Do Not Equip	Confidential
	Company Enclustra FPGA Solutions	Copyright © 2022 by Enclustra GmbH Switzerland	Project No 506	Designed MHEI	Date 26 Oct 2022	Sheet/sheets 19 / 23

Module Mounting Holes M3

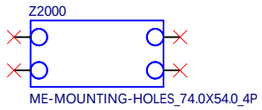

PCB Fiducials

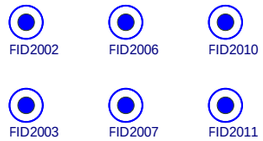

FPGA Heat Sink

PCB / Logo / Pin-1 Marking / Text

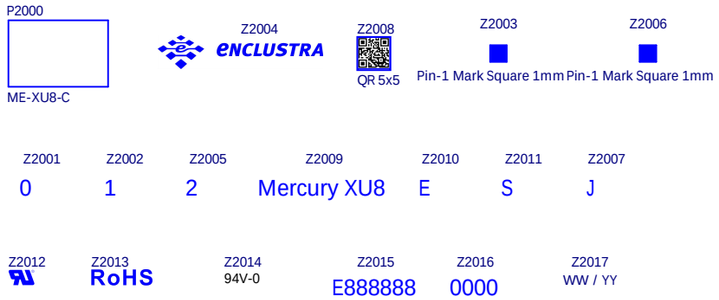

ENCLUSTRA FPGA SOLUTIONS	Project ME-XU8.PrjPcb	Sheet Name ME-XU8_P20_MECHANICS.SchDoc	Customer No 0000	Revision R3.0	DNE = Do Not Equip	Confidential
	Company Enclustra FPGA Solutions	Copyright © 2022 by Enclustra GmbH Switzerland	Project No 506	Designed MHEI	Date 26 Oct 2022	Sheet/sheets 20 / 23

Component Options

FPGA	DDR4	eMMC	Ethernet PHY 0	ETH0_EQ	Ethernet PHY 1	ETH1_EQ	ETH_EQ
Part U200A XCZU4CG-1FBVB900E EN102158 Part U200B XCZU4CG-1FBVB900I EN102716 Part U200C XCZU5EV-1FBVB900I EN102159 Part U200D XCZU7EV-1FBVB900E EN102615 Part U200E XCZU7EV-2FBVB900I EN102160 Part U200F XCZU7EG-2FBVB900I EN103104	Part U1000A:1 K4A4G165WE-BIRC EN101868 Part U1000A:2 NDQ46PFP-8NIT EN103227 Part U1000B:1 K4A8G165WB-BIRC EN101979 Part U1000B:2 AS4C512M16D4-75BIN EN104035 Part U1000C:1 K4AAG165WB-MCRC EN102970 Part U1001A:1 K4A4G165WE-BIRC EN101868 Part U1001A:2 NDQ46PFP-8NIT EN103227 Part U1001B:1 K4A8G165WB-BIRC EN101979 Part U1001B:2 AS4C512M16D4-75BIN EN104035 Part U1001C:1 K4AAG165WB-MCRC EN102970 Part U1100A:1 K4A4G165WE-BIRC EN101868 Part U1100A:2 NDQ46PFP-8NIT EN103227 Part U1100B:1 K4A8G165WB-BIRC EN101979 Part U1100B:2 AS4C512M16D4-75BIN EN104035 Part U1100C:1 K4AAG165WB-MCRC EN102970 Part U1101A:1 K4A4G165WE-BIRC EN101868 Part U1101A:2 NDQ46PFP-8NIT EN103227 Part U1101B:1 K4A8G165WB-BIRC EN101979 Part U1101B:2 AS4C512M16D4-75BIN EN104035 Part U1101C:1 K4AAG165WB-MCRC EN102970 Part U1102A:1 K4A4G165WE-BIRC EN101868 Part U1102A:2 NDQ46PFP-8NIT EN103227 Part U1102B:1 K4A8G165WB-BIRC EN101979 Part U1102B:2 AS4C512M16D4-75BIN EN104035 Part U1102C:1 K4AAG165WB-MCRC EN102970 Part U1200A:1 K4A4G165WE-BIRC EN101868 Part U1200A:2 NDQ46PFP-8NIT EN103227 Part U1200B:1 K4A8G165WB-BIRC EN101979 Part U1200B:2 AS4C512M16D4-75BIN EN104035 Part U1200C:1 K4AAG165WB-MCRC EN102970 Part U1201A:1 K4A4G165WE-BIRC EN101868 Part U1201A:2 NDQ46PFP-8NIT EN103227 Part U1201B:1 K4A8G165WB-BIRC EN101979 Part U1201B:2 AS4C512M16D4-75BIN EN104035 Part U1201C:1 K4AAG165WB-MCRC EN102970	Part U1601A FEMDRW016G-88A43 EN104303	Part U1300A KSZ9031RNXIA EN101934 Part U1300B KSZ9031RNXIC EN104260	D1300 R1301, R1302, R1303 R1311, R1611 or DNE	Part U1301A KSZ9031RNXIA EN101934 Part U1301B KSZ9031RNXIC EN104260	D1301 R1305, R1306, R1308 R1312, R1612 or DNE	L1300, L1301 C1300 - C1306 C1310 - C1312 C1314 C1319 - C1321 C1324 - C1327 or DNE

Component Assembly

Assembly Variant	FPGA	DDR4	eMMC	Ethernet PHY 0	ETH0_EQ	Ethernet PHY 1	ETH1_EQ	ETH_EQ
Variant EN104461:0 ME-XU8-4CG-1E-D11E-R3.0	Option EN104461:1 FPGA EN102158	Option EN104461:2 DDR4 EN103227	Option EN104461:3 EMMC EN104303	Option EN104461:4 ETH0 EN101934	Option EN104461:18 ETH0_EQ	Option EN104461:17 ETH1 EN101934	Option EN104461:16 ETH1_EQ	Option EN104461:19 ETH_EQ
Variant EN104462:0 ME-XU8-4CG-1I-D11E-R3.0	Option EN104462:1 FPGA EN102716	Option EN104462:2 DDR4 EN103227	Option EN104462:3 EMMC EN104303	Option EN104462:4 ETH0 EN101934	Option EN104462:18 ETH0_EQ	Option EN104462:17 ETH1 EN101934	Option EN104462:16 ETH1_EQ	Option EN104462:19 ETH_EQ
Variant EN104463:0 ME-XU8-5EV-1I-D12E-R3.0	Option EN104463:1 FPGA EN102159	Option EN104463:2 DDR4 EN104035	Option EN104463:3 EMMC EN104303	Option EN104463:4 ETH0 EN101934	Option EN104463:18 ETH0_EQ	Option EN104463:17 ETH1 EN101934	Option EN104463:16 ETH1_EQ	Option EN104463:19 ETH_EQ
Variant EN104509:0 ME-XU8-7EG-2I-D11E-R3.0	Option EN104509:1 FPGA EN103104	Option EN104509:2 DDR4 EN103227	Option EN104509:3 EMMC EN104303	Option EN104509:4 ETH0 EN101934	Option EN104509:18 ETH0_EQ	Option EN104509:17 ETH1 EN101934	Option EN104509:16 ETH1_EQ	Option EN104509:19 ETH_EQ
Variant EN104464:0 ME-XU8-7EV-1E-D11E-R3.0	Option EN104464:1 FPGA EN102615	Option EN104464:2 DDR4 EN103227	Option EN104464:3 EMMC EN104303	Option EN104464:4 ETH0 EN101934	Option EN104464:18 ETH0_EQ	Option EN104464:17 ETH1 EN101934	Option EN104464:16 ETH1_EQ	Option EN104464:19 ETH_EQ
Variant EN104465:0 ME-XU8-7EV-2I-D12E-R3.0	Option EN104465:1 FPGA EN102160	Option EN104465:2 DDR4 EN104035	Option EN104465:3 EMMC EN104303	Option EN104465:4 ETH0 EN101934	Option EN104465:18 ETH0_EQ	Option EN104465:17 ETH1 EN101934	Option EN104465:16 ETH1_EQ	Option EN104465:19 ETH_EQ
Variant EN104466:0 ME-XU8-7EV-2I-D12E-E1-R3.0	Option EN104466:1 FPGA EN102160	Option EN104466:2 DDR4 EN104035	Option EN104466:3 EMMC EN104303	Option EN104466:4 ETH0 EN101934	Option EN104466:18 ETH0_EQ	Option EN104466:17 ETH1 DNE	Option EN104466:16 ETH1_EQ DNE	Option EN104466:19 ETH_EQ
Variant EN105067:0 ME-XU8-7EV-2E-D13E-R3.0	Option EN105067:1 FPGA EN102160	Option EN105067:2 DDR4 EN102970	Option EN105067:3 EMMC EN104303	Option EN105067:4 ETH0 EN101934	Option EN105067:18 ETH0_EQ	Option EN105067:17 ETH1 EN101934	Option EN105067:16 ETH1_EQ	Option EN105067:19 ETH_EQ
Variant EN104467:0 ME-XU8-5EV-1I-D12E-NE-R3.0	Option EN104467:1 FPGA EN102159	Option EN104467:2 DDR4 EN104035	Option EN104467:3 EMMC EN104303	Option EN104467:4 ETH0 DNE	Option EN104467:18 ETH0_EQ DNE	Option EN104467:17 ETH1 DNE	Option EN104467:16 ETH1_EQ DNE	Option EN104467:19 ETH_EQ DNE

Component Options

OSC27	OSC24	OSC25	OSC33	OSC100	L0U68	L1U5	L2U2	L_VCC_INT	SEC_EEPROM	VCC_INT_VCU	TD_UZQ	TD	OTG
Part Y301A ASEMPC_27.000MHZ-LR-T EN101608 Part Y301B ASEMPC-27.000MHZ-XR-T EN101609	Part Y1602A O_24.0-JO32-B-1V3-1-T1-LF EN104079 Part Y1602B ECS-3225MVQ-240-BP-TR EN104080	Part Y1601A ASE-25.000MHZ-LC-T EN100287 Part Y1601B 831055678 EN104082	Part Y1600A DSC1001CI2-033.3330 EN104103	Part Y300A DSC1123CI2-100.0000 EN103018 Part Y302A DSC1123CI2-100.0000 EN103018	Part L1701A 0u68 EN102112 Part L1701B 0u68 EN102445 Part L1800A 0u68 EN102112 Part L1800B 0u68 EN102445 Part L1801A 0u68 EN102112 Part L1801B 0u68 EN102445	Part L1700A 1u5 EN102613 Part L1700B 1u5 EN102207	Part L1900A 2u2 EN102185 Part L1900B 2u2 EN102208 Part L1900C 2u2 EN101680	Part L1702A 100nH EN102190 Part L1702B 220n EN102189	Part U1505A ATSHA204A-MAHDA-T EN100827 Part U1505B DS28CN01U-A00+ EN100280	R604 or R607 C731, C736, C740, C743, C746, C749 or DNE	Part R1006A 0R EN101361 Part R1006B 240R EN101382 Part R1100A 0R EN101361 Part R1100B 240R EN101382 Part R1104A 0R EN101361 Part R1104B 240R EN101382 Part R1292A 0R EN101361 Part R1292B 240R EN101382 Part R1012A 0R EN101361 Part R1012B 240R EN101382 Part R1102A 0R EN101361 Part R1102B 240R EN101382 Part R1216A 0R EN101361 Part R1216B 240R EN101382 0R for normal, 240R for TD	PL DDR: R1207 or R1200, R1204 PS DDR: R1005, R1014 or R1015 DNE for normal, assembled for TD	R1417, R1418 or R1407, R1409 R1410, R1415, R1416, U1401 Q1400

Component Assembly

OSC27	OSC24	OSC25	OSC33	OSC100	L0U68	L1U5	L2U2	L_VCC_INT	SEC_EEPROM	VCC_INT_VCU	TD_UZQ	TD	OTG
Option EN104461:5 OSC27 EN101608	Option EN104461:6 OSC24 EN104079	Option EN104461:7 OSC25 EN100287	Option EN104461:8 OSC33 EN104103	Option EN104461:9 OSC100 EN103018	Option EN104461:10 L0U68 EN102112	Option EN104461:11 L1U5 EN102207	Option EN104461:12 L2U2 EN102185	Option EN104461:13 L_VCC_INT EN102190	Option EN104461:14 SEC_EEPROM EN100827	Option EN104461:15 VCC_INT_VCU DNE	Option EN104461:20 TD_UZQ EN101361	Option EN104461:21 TD DNE	Option EN104461:22 OTG DNE
Option EN104462:5 OSC27 EN101608	Option EN104462:6 OSC24 EN104079	Option EN104462:7 OSC25 EN100287	Option EN104462:8 OSC33 EN104103	Option EN104462:9 OSC100 EN103018	Option EN104462:10 L0U68 EN102112	Option EN104462:11 L1U5 EN102207	Option EN104462:12 L2U2 EN102185	Option EN104462:13 L_VCC_INT EN102190	Option EN104462:14 SEC_EEPROM EN100827	Option EN104462:15 VCC_INT_VCU DNE	Option EN104462:20 TD_UZQ EN101361	Option EN104462:21 TD DNE	Option EN104462:22 OTG DNE
Option EN104463:5 OSC27 EN101608	Option EN104463:6 OSC24 EN104079	Option EN104463:7 OSC25 EN100287	Option EN104463:8 OSC33 EN104103	Option EN104463:9 OSC100 EN103018	Option EN104463:10 L0U68 EN102112	Option EN104463:11 L1U5 EN102207	Option EN104463:12 L2U2 EN102185	Option EN104463:13 L_VCC_INT EN102190	Option EN104463:14 SEC_EEPROM EN100827	Option EN104463:15 VCC_INT_VCU	Option EN104463:20 TD_UZQ EN101361	Option EN104463:21 TD DNE	Option EN104463:22 OTG DNE
Option EN104509:5 OSC27 EN101608	Option EN104509:6 OSC24 EN104079	Option EN104509:7 OSC25 EN100287	Option EN104509:8 OSC33 EN104103	Option EN104509:9 OSC100 EN103018	Option EN104509:10 L0U68 EN102112	Option EN104509:11 L1U5 EN102207	Option EN104509:12 L2U2 EN102185	Option EN104509:13 L_VCC_INT EN102190	Option EN104509:14 SEC_EEPROM EN100827	Option EN104509:15 VCC_INT_VCU DNE	Option EN104509:20 TD_UZQ EN101361	Option EN104509:21 TD DNE	Option EN104509:22 OTG DNE
Option EN104464:5 OSC27 EN101608	Option EN104464:6 OSC24 EN104079	Option EN104464:7 OSC25 EN100287	Option EN104464:8 OSC33 EN104103	Option EN104464:9 OSC100 EN103018	Option EN104464:10 L0U68 EN102112	Option EN104464:11 L1U5 EN102207	Option EN104464:12 L2U2 EN102185	Option EN104464:13 L_VCC_INT EN102190	Option EN104464:14 SEC_EEPROM EN100827	Option EN104464:15 VCC_INT_VCU	Option EN104464:20 TD_UZQ EN101361	Option EN104464:21 TD DNE	Option EN104464:22 OTG DNE
Option EN104465:5 OSC27 EN101608	Option EN104465:6 OSC24 EN104079	Option EN104465:7 OSC25 EN100287	Option EN104465:8 OSC33 EN104103	Option EN104465:9 OSC100 EN103018	Option EN104465:10 L0U68 EN102112	Option EN104465:11 L1U5 EN102207	Option EN104465:12 L2U2 EN102185	Option EN104465:13 L_VCC_INT EN102190	Option EN104465:14 SEC_EEPROM EN100827	Option EN104465:15 VCC_INT_VCU	Option EN104465:20 TD_UZQ EN101361	Option EN104465:21 TD DNE	Option EN104465:22 OTG DNE
Option EN104466:5 OSC27 EN101608	Option EN104466:6 OSC24 EN104079	Option EN104466:7 OSC25 EN100287	Option EN104466:8 OSC33 EN104103	Option EN104466:9 OSC100 EN103018	Option EN104466:10 L0U68 EN102112	Option EN104466:11 L1U5 EN102207	Option EN104466:12 L2U2 EN102185	Option EN104466:13 L_VCC_INT EN102190	Option EN104466:14 SEC_EEPROM EN100827	Option EN104466:15 VCC_INT_VCU	Option EN104466:20 TD_UZQ EN101361	Option EN104466:21 TD DNE	Option EN104466:22 OTG DNE
Option EN105067:5 OSC27 EN101608	Option EN105067:6 OSC24 EN104079	Option EN105067:7 OSC25 EN100287	Option EN105067:8 OSC33 EN104103	Option EN105067:9 OSC100 EN103018	Option EN105067:10 L0U68 EN102112	Option EN105067:11 L1U5 EN102207	Option EN105067:12 L2U2 EN102185	Option EN105067:13 L_VCC_INT EN102190	Option EN105067:14 SEC_EEPROM EN100827	Option EN105067:15 VCC_INT_VCU	Option EN105067:20 TD_UZQ EN101382	Option EN105067:21 TD	Option EN105067:22 OTG DNE
Option EN104467:5 OSC27 EN101608	Option EN104467:6 OSC24 EN104079	Option EN104467:7 OSC25 DNE	Option EN104467:8 OSC33 EN104103	Option EN104467:9 OSC100 EN103018	Option EN104467:10 L0U68 EN102112	Option EN104467:11 L1U5 EN102207	Option EN104467:12 L2U2 EN102185	Option EN104467:13 L_VCC_INT EN102190	Option EN104467:14 SEC_EEPROM EN100827	Option EN104467:15 VCC_INT_VCU	Option EN104467:20 TD_UZQ EN101361	Option EN104467:21 TD DNE	Option EN104467:22 OTG DNE