Enclustra User Schematics

Mercury XU9 Revision 2.0

Disclaimer

User schematics do not include proprietary Enclustra design elements, such as power supply circuits.
These circuits use optimized designs which are extremely compact and remain proprietary to Enclustra.
The user manual provides all necessary information to use the module and its interfaces.

User schematics are provided after purchase of Enclustra hardware, and may also be provided in certain cases before purchase, to assist in product evaluation.
No part of the schematics may be copied or modified without written permission from Enclustra.

Full schematics, including a full bill-of-materials, may be available through the purchase of a hardware licence for the product in question.
Please contact Enclustra Sales for more information.

Note: DNE = Do Not Equip (parts not equipped by default)

© Enclustra GmbH

Mercury+ XU9 SoC Module

Revision 2.0

Sheet 1: Cover
Sheet 2: SoC FPGA Configuration
Sheet 3: SoC FPGA MGT Banks | User LEDs
Sheet 4: SoC FPGA IO Banks
Sheet 5: SoC FPGA PS Banks
Sheet 6: SoC FPGA Power
Sheet 7: Power Decoupling
Sheet 8: Module Connectors A | B
Sheet 9: Module Connector C
Sheet 10: PS DDR4 SDRAM Bytes 0-3
Sheet 11: PS DDR4 SDRAM Bytes 4-8 (ECC)
Sheet 12: PL DDR4 SDRAM Bytes 0-3
Sheet 13: PL DDR4 SDRAM Bytes 4-7
Sheet 14: Gigabit Ethernet PHYs
Sheet 15: USB 2.0 PHYs
Sheet 16: Level Shifters | Secure EEPROM
Sheet 17: eMMC Flash | QSPI Flash
Sheet 18: Power 3.3V | 1.2V | 0.72V/0.85V/0.9V | 5.0V
Sheet 19: Power 0.85V/0.9V | 0.9V | 2.5V | VTT
Sheet 20: Power 1.8V | 0.85V
Sheet 21: Mechanics
Sheet 22: Assembly Variants
Sheet 23: Assembly Variants

Boot Mode Selection

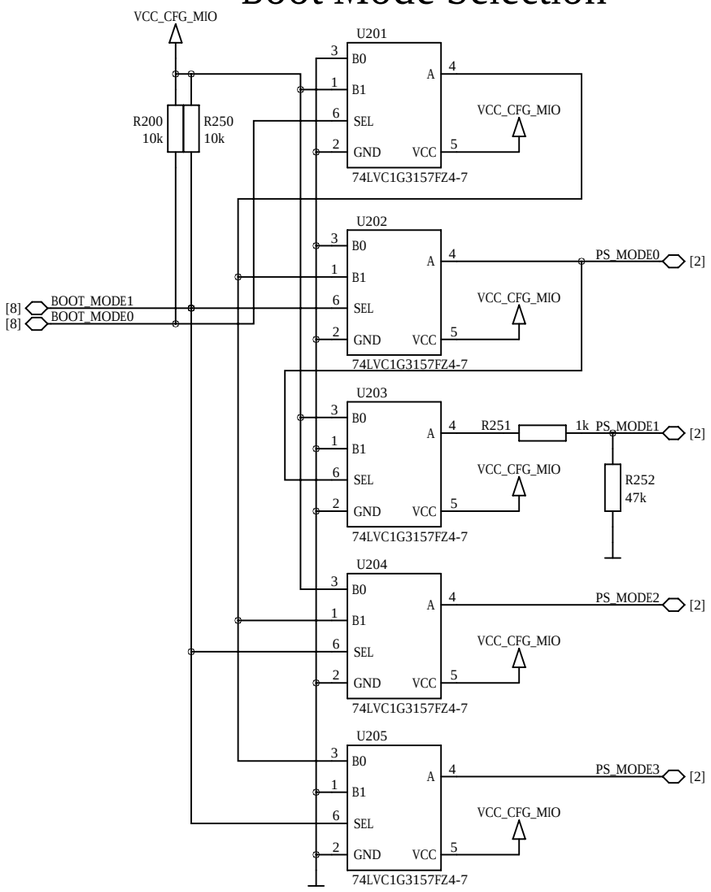

PCIe Reset

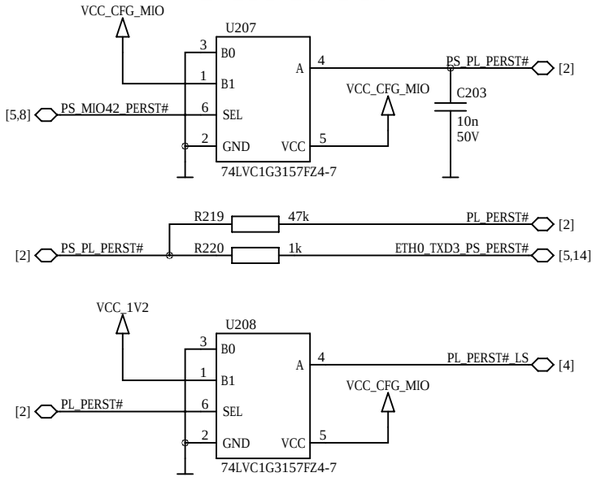

User LEDs

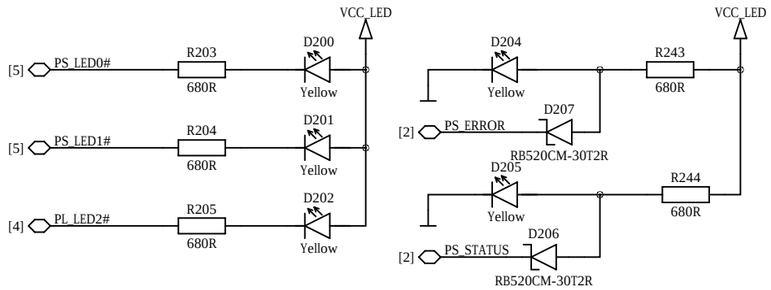

LED Power

This part is intentionally left blank.

HD Bank Termination

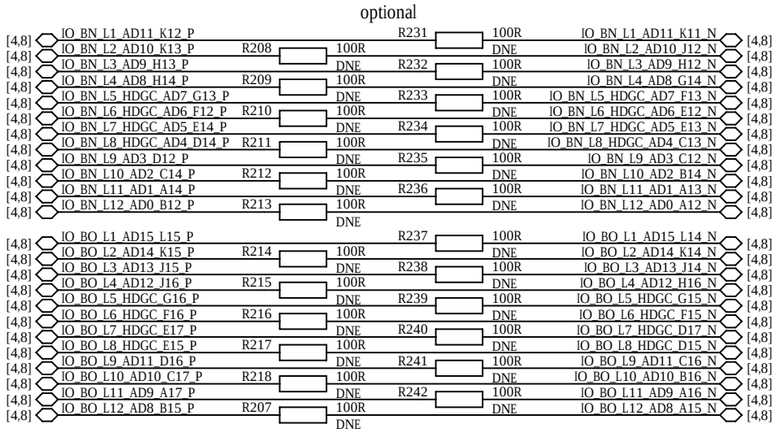

Miscellaneous

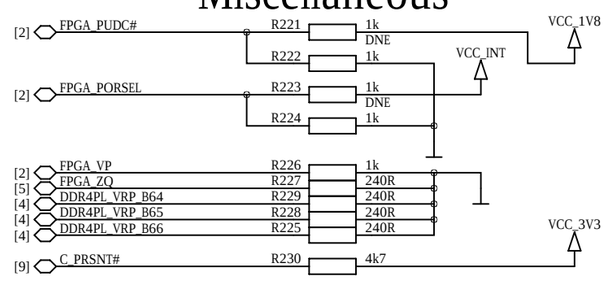

Boot Modes

	Boot Mode		Mode Straps	Configuration	
	1	0	PS_MODE	PL Boot	PS Boot
eMMC Mode	0	0	0110	PS	eMMC
SD Mode LS not supported	0	1	1110	PS	SDIO with level shifter
QSPI Mode	1	0	0010	PS	QSPI
SD Mode default	1	1	0101	PS	SDIO
JTAG Mode (*)	1	0	0000	PS	JTAG

SD Mode LS mode may be supported in the future. It requires VCC_CFG_MIO of 1.8V.
(*) Short-circuit R252 to enable JTAG mode

FPGA Configuration

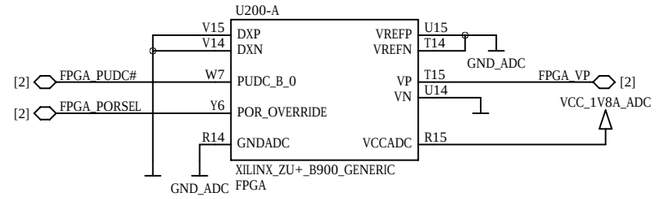

FPGA PS Configuration

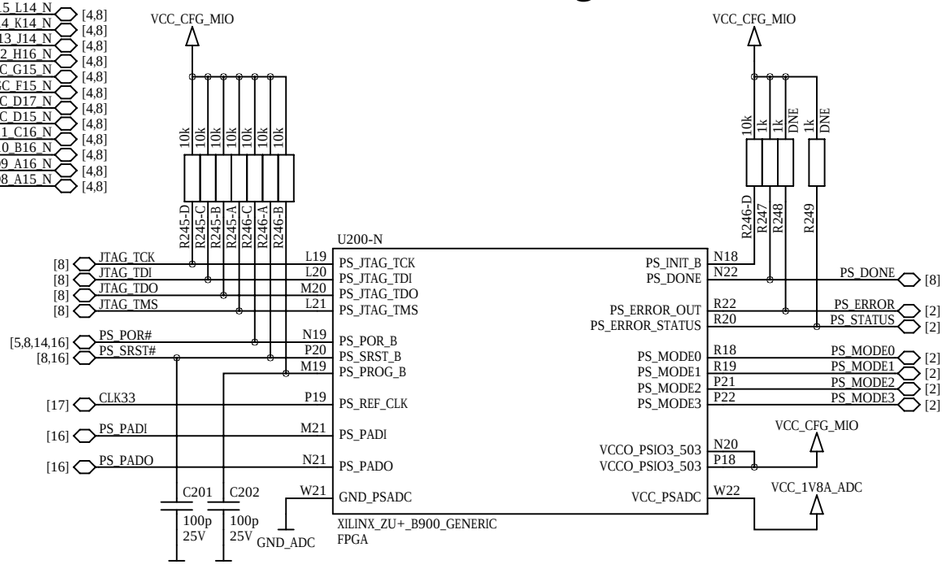

FPGA MGT Bank A

Bank 223 on ZU4/ZU5 | Bank 224 on ZU7

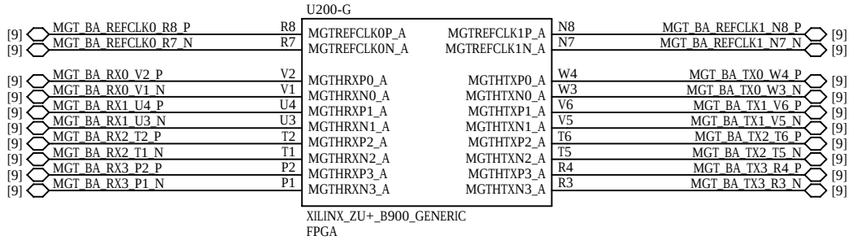

FPGA MGT Bank B

Bank 224 on ZU4/ZU5 | Bank 225 on ZU7

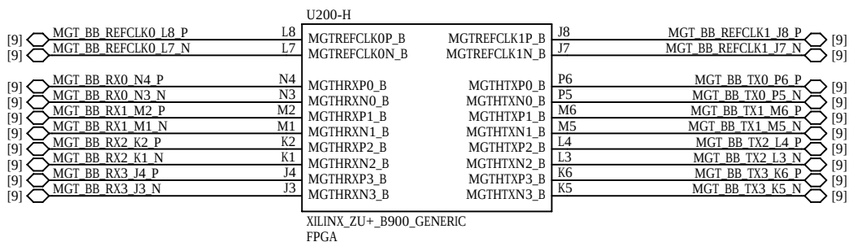

FPGA MGT Bank C

Bank 225 on ZU4/ZU5 | Bank 226 on ZU7

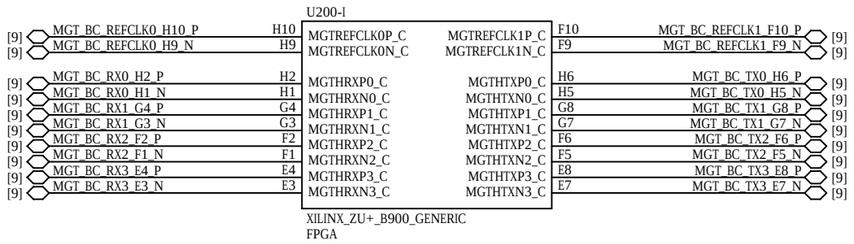

FPGA MGT Bank D

Bank 226 on ZU4/ZU5 | Bank 227 on ZU7

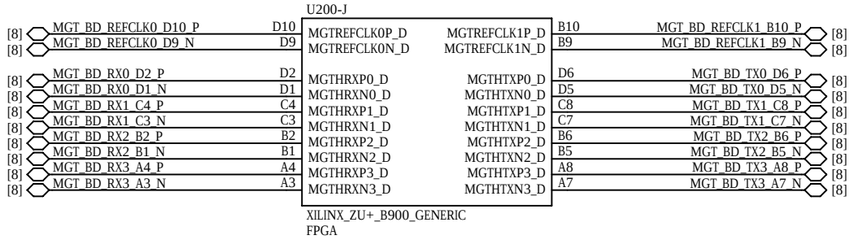

FPGA PS GTR Bank 505

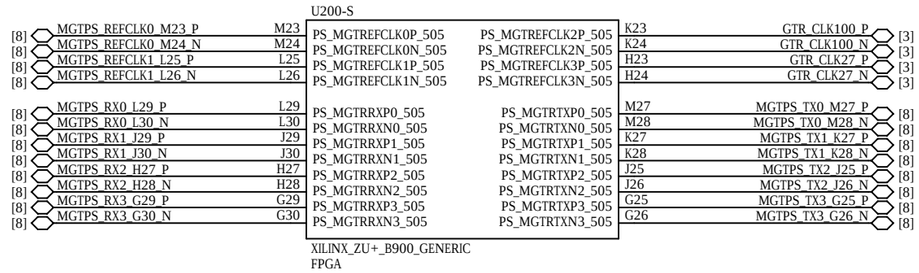

GTR/PL 100 MHz Oscillator

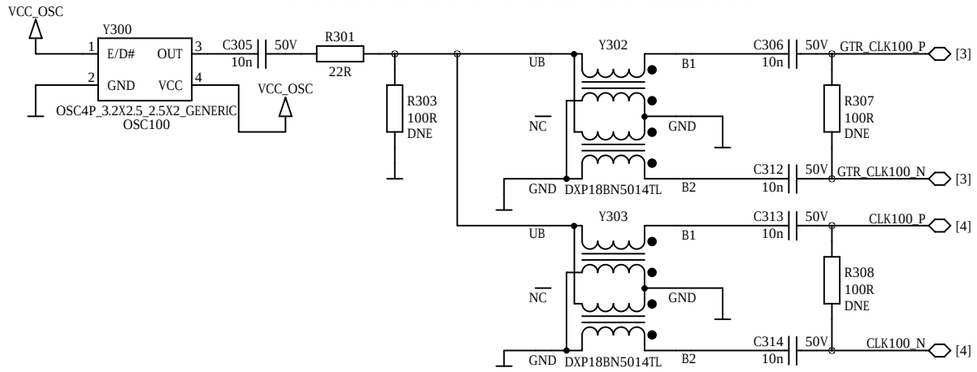

GTR 27 MHz Oscillator

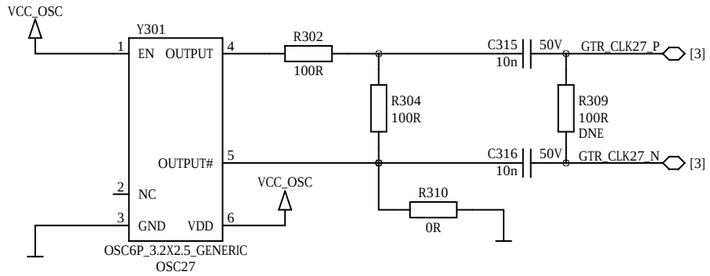

GTR Oscillator Power Filters

This part is intentionally left blank.

FPGA HP Bank 64

VCCO = VCC_1V2

U200-D

[12]	DDR4PL_DM0	AA13	IO_L1P_T0L0D_64	IO_L13P_T2L0Q_GC_64	AF16	DDR4PL_DM2	[12]
[16]	I2C_SCL_PL	AB13	IO_L1N_T0L1D_64	IO_L13N_T2L1Q_GC_64	AF17	IO_B64_AF17	[16]
[12]	DDR4PL_DQ5	AE14	IO_L2P_T0L2_64	IO_L14P_T2L2_GC_64	AD17	DDR4PL_DQ23	[12]
[12]	DDR4PL_DQ7	AE13	IO_L2N_T0L3_64	IO_L14N_T2L3_GC_64	AE17	DDR4PL_DQ21	[12]
[12]	DDR4PL_DQ1	AC14	IO_L3P_T0L4_AD15P_64	IO_L15P_T2L4_AD11P_64	AC16	DDR4PL_DQ22	[12]
[12]	DDR4PL_DQ3	AD14	IO_L3N_T0L5_AD15N_64	IO_L15N_T2L5_AD11N_64	AD16	DDR4PL_DQ19	[12]
[12]	DDR4PL_DQS0_P	AA14	IO_L4P_T0U6D_AD7P_64	IO_L16P_T2U6Q_AD3P_64	AA16	DDR4PL_DQS2_P	[12]
[12]	DDR4PL_DQS0_N	AB14	IO_L4N_T0U7D_AD7N_64	IO_L16N_T2U7Q_AD3N_64	AB16	DDR4PL_DQS2_N	[12]
[12]	DDR4PL_DQ2	AA15	IO_L5P_T0U8_AD14P_64	IO_L17P_T2U8_AD10P_64	AC17	DDR4PL_DQ20	[12]
[12]	DDR4PL_DQ4	AB15	IO_L5N_T0U9_AD14N_64	IO_L17N_T2U9_AD10N_64	AC18	DDR4PL_DQ16	[12]
[12]	DDR4PL_DQ0	AD15	IO_L6P_T0U10_AD6P_64	IO_L18P_T2U10_AD2P_64	AD19	DDR4PL_DQ18	[12]
[12]	DDR4PL_DQ6	AE15	IO_L6N_T0U11_AD6N_64	IO_L18N_T2U11_AD2N_64	AE19	DDR4PL_DQ17	[12]
[2]	DDR4PL_VRP_B64	AC13	IO_T0U12_VRP_64	IO_T2U12_64	AC19	IO_B64_AC19	[16]
[12]	DDR4PL_DM1	AG13	IO_L7P_T1L0Q_AD13P_64	IO_L19P_T3L0D_AD9P_64	AG16	DDR4PL_DM3	[12]
[16]	I2C_SDA_PL	AH13	IO_L7N_T1L1Q_AD13N_64	IO_L19N_T3L1D_AD9N_64	AH16	IO_B64_AH16	[16]
[12]	DDR4PL_DQ13	AK13	IO_L8P_T1L2_AD5P_64	IO_L20P_T3L2_AD1P_64	AJ16	DDR4PL_DQ25	[12]
[12]	DDR4PL_DQ15	AK12	IO_L8N_T1L3_AD5N_64	IO_L20N_T3L3_AD1N_64	AK16	DDR4PL_DQ29	[12]
[12]	DDR4PL_DQ11	AJ14	IO_L9P_T1L4_AD12P_64	IO_L21P_T3L4_AD8P_64	AH17	DDR4PL_DQ31	[12]
[12]	DDR4PL_DQ9	AK14	IO_L9N_T1L5_AD12N_64	IO_L21N_T3L5_AD8N_64	AJ17	DDR4PL_DQ27	[12]
[12]	DDR4PL_DQS1_P	AJ15	IO_L10P_T1U6Q_AD4P_64	IO_L22P_T3U6D_AD0P_64	AK17	DDR4PL_DQS3_P	[12]
[12]	DDR4PL_DQS1_N	AK15	IO_L10N_T1U7Q_AD4N_64	IO_L22N_T3U7D_AD0N_64	AK18	DDR4PL_DQS3_N	[12]
[12]	DDR4PL_DQ12	AG14	IO_L11P_T1U8_GC_64	IO_L23P_T3U8_64	AG18	DDR4PL_DQ28	[12]
[12]	DDR4PL_DQ14	AH14	IO_L11N_T1U9_GC_64	IO_L23N_T3U9_64	AH18	DDR4PL_DQ30	[12]
[12]	DDR4PL_DQ8	AF15	IO_L12P_T1U10_GC_64	IO_L24P_T3U10_64	AE18	DDR4PL_DQ26	[12]
[12]	DDR4PL_DQ10	AG15	IO_L12N_T1U11_GC_64	IO_L24N_T3U11_64	AF18	DDR4PL_DQ24	[12]
[2]	PL_LED2#	AF13	IO_T1U12_64	IO_T3U12_64	AG19	IO_B64_AG19	[16]
				VCCO_64	AC15		
				VCCO_64	AF14		
[4]	VREF_DDR4PL	AA17	VREF_64	VCCO_64	AG17		

VCC_1V2

XILINX_ZU+_B900_GENERIC
FPGA

C401 100p 25V DNE

C400 100p 25V DNE

FPGA HP Bank 65

VCCO = VCC_1V2

U200-E

R400 100R

[9]	IO_B65_L1_AH12_P	AH12	IO_L1P_T0L0D_65	IO_L13P_T2L0Q_GC_65	AH6	CLK100_P	[3]
[9]	IO_B65_L1_AJ12_N	AJ12	IO_L1N_T0L1D_65	IO_L13N_T2L1Q_GC_65	AJ6	CLK100_N	[3]
[9]	IO_B65_L2_AF12_P	AF12	IO_L2P_T0L2_65	IO_L14P_T2L2_GC_65	AG6	DDR4PL_A0	[12,13]
[9]	IO_B65_L2_AF11_N	AF11	IO_L2N_T0L3_65	IO_L14N_T2L3_GC_65	AG5	DDR4PL_A1	[12,13]
[9]	IO_B65_L3_AD15_AG11_P	AG11	IO_L3P_T0L4_AD15P_65	IO_L15P_T2L4_AD11P_65	AK7	DDR4PL_A2	[12,13]
[9]	IO_B65_L3_AD15_AH11_N	AH11	IO_L3N_T0L5_AD15N_65	IO_L15N_T2L5_AD11N_65	AK6	DDR4PL_A3	[12,13]
[9]	IO_B65_L4_AD7_ALERT_AJ11_P	AJ11	IO_L4P_T0U6D_AD7P_ALERT_65	IO_L16P_T2U6Q_AD3P_65	AJ5	DDR4PL_CK_P	[12,13]
[9]	IO_B65_L4_AD7_AK11_N	AK11	IO_L4N_T0U7D_AD7N_65	IO_L16N_T2U7Q_AD3N_65	AK5	DDR4PL_CK_N	[12,13]
[9]	IO_B65_L5_AD14_AJ10_P	AJ10	IO_L5P_T0U8_AD14P_65	IO_L17P_T2U8_AD10P_65	AJ4	DDR4PL_A4	[12,13]
[9]	IO_B65_L5_AD14_AK10_N	AK10	IO_L5N_T0U9_AD14N_65	IO_L17N_T2U9_AD10N_65	AK4	DDR4PL_A5	[12,13]
[9]	IO_B65_L6_AD6_AF10_P	AF10	IO_L6P_T0U10_AD6P_65	IO_L18P_T2U10_AD2P_65	AF6	DDR4PL_A6	[12,13]
[9]	IO_B65_L6_AD6_AG10_N	AG10	IO_L6N_T0U11_AD6N_65	IO_L18N_T2U11_AD2N_65	AF5	DDR4PL_A7	[12,13]
[2]	DDR4PL_VRP_B65	AE10	IO_T0U12_VRP_65	IO_T2U12_65	AH4	DDR4PL_A8	[12,13]
[9]	IO_B65_L7_AD13_AK9_P	AK9	IO_L7P_T1L0Q_AD13P_65	IO_L19P_T3L0D_AD9P_65	AK3	DDR4PL_A9	[12,13]
[9]	IO_B65_L7_AD13_AK8_N	AK8	IO_L7N_T1L1Q_AD13N_65	IO_L19N_T3L1D_AD9N_65	AK2	DDR4PL_A10	[12,13]
[9]	IO_B65_L8_AD5_AH9_P	AH9	IO_L8P_T1L2_AD5P_65	IO_L20P_T3L2_AD1P_65	AJ2	DDR4PL_A11	[12,13]
[9]	IO_B65_L8_AD5_AJ9_N	AJ9	IO_L8N_T1L3_AD5N_65	IO_L20N_T3L3_AD1N_65	AJ1	DDR4PL_A12	[12,13]
[12,13]	DDR4PL_BG0	AF8	IO_L9P_T1L4_AD12P_65	IO_L21P_T3L4_AD8P_65	AH3	DDR4PL_A13	[12,13]
[12]	DDR4PL_BG1_A17	AF7	IO_L9N_T1L5_AD12N_65	IO_L21N_T3L5_AD8N_65	AH2	DDR4PL_A14	[12,13]
[12,13]	DDR4PL_CS#	AE9	IO_L10P_T1U6Q_AD4P_65	IO_L22P_T3U6D_AD0P_65	AG4	DDR4PL_A15	[12,13]
[12,13]	DDR4PL_CKE	AE8	IO_L10N_T1U7Q_AD4N_65	IO_L22N_T3U7D_AD0N_65	AG3	DDR4PL_A16	[12,13]
[9]	IO_B65_L11_GC_AG8_P	AG8	IO_L11P_T1U8_GC_65	IO_L23P_T3U8_SCLK_65	AG1	DDR4PL_ACT#	[12,13]
[9]	IO_B65_L11_GC_AH8_N	AH8	IO_L11N_T1U9_GC_65	IO_L23N_T3U9_65	AH1	DDR4PL_BA0	[12,13]
[9]	IO_B65_L12_GC_AH7_P	AH7	IO_L12P_T1U10_GC_65	IO_L24P_T3U10_SDA_65	AF3	DDR4PL_BA1	[12,13]
[9]	IO_B65_L12_GC_AJ7_N	AJ7	IO_L12N_T1U11_GC_65	IO_L24N_T3U11_PERSTN_65	AF2	PL_PERST#_LS	[2]
[12,13]	DDR4PL_RST#	AG9	IO_T1U12_65	IO_T3U12_65	AF1	DDR4PL_ODT	[12,13]
				VCCO_65	AE11		
				VCCO_65	AG7		
[4]	VREF_DDR4PL	AE12	VREF_65	VCCO_65	AH10		

VCC_1V2

XILINX_ZU+_B900_GENERIC
FPGA

FPGA HP Bank 66

VCCO = VCC_1V2

U200-F

[13]	DDR4PL_DM4	AC12	IO_L1P_T0L0D_66	IO_L13P_T2L0Q_GC_66	AD7	DDR4PL_DM6	[13]
[9]	IO_B66_AD12	AD12	IO_L1N_T0L1D_66	IO_L13N_T2L1Q_GC_66	AE7	IO_B66_AE7	[9]
[13]	DDR4PL_DQ39	AA12	IO_L2P_T0L2_66	IO_L14P_T2L2_GC_66	AB6	DDR4PL_DQ51	[13]
[13]	DDR4PL_DQ35	AA11	IO_L2N_T0L3_66	IO_L14N_T2L3_GC_66	AB5	DDR4PL_DQ49	[13]
[13]	DDR4PL_DQ37	AB11	IO_L3P_T0L4_AD15P_66	IO_L15P_T2L4_AD11P_66	AD5	DDR4PL_DQ52	[13]
[13]	DDR4PL_DQ33	AC11	IO_L3N_T0L5_AD15N_66	IO_L15N_T2L5_AD11N_66	AE5	DDR4PL_DQ48	[13]
[13]	DDR4PL_DQS4_P	AD11	IO_L4P_T0U6D_AD7P_66	IO_L16P_T2U6Q_AD3P_66	AD4	DDR4PL_DQS6_P	[13]
[13]	DDR4PL_DQS4_N	AD10	IO_L4N_T0U7D_AD7N_66	IO_L16N_T2U7Q_AD3N_66	AE4	DDR4PL_DQS6_N	[13]
[13]	DDR4PL_DQ36	AB10	IO_L5P_T0U8_AD14P_66	IO_L17P_T2U8_AD10P_66	AB4	DDR4PL_DQ50	[13]
[13]	DDR4PL_DQ32	AB9	IO_L5N_T0U9_AD14N_66	IO_L17N_T2U9_AD10N_66	AC4	DDR4PL_DQ54	[13]
[13]	DDR4PL_DQ34	Y10	IO_L6P_T0U10_AD6P_66	IO_L18P_T2U10_AD2P_66	AA6	DDR4PL_DQ53	[13]
[13]	DDR4PL_DQ38	AA10	IO_L6N_T0U11_AD6N_66	IO_L18N_T2U11_AD2N_66	AA5	DDR4PL_DQ55	[13]
[2]	DDR4PL_VRP_B66	Y9	IO_T0U12_VRP_66	IO_T2U12_66	AE3	IO_B66_AE3	[9]
[13]	DDR4PL_DM5	AC9	IO_L7P_T1L0Q_AD13P_66	IO_L19P_T3L0D_AD9P_66	AD2	DDR4PL_DM7	[13]
[9]	IO_B66_AD9	AD9	IO_L7N_T1L1Q_AD13N_66	IO_L19N_T3L1D_AD9N_66	AE2	IO_B66_AE2	[9]
[13]	DDR4PL_DQ44	AC6	IO_L8P_T1L2_AD5P_66	IO_L20P_T3L2_AD1P_66	AD1	DDR4PL_DQ60	[13]
[13]	DDR4PL_DQ40	AD6	IO_L8N_T1L3_AD5N_66	IO_L20N_T3L3_AD1N_66	AE1	DDR4PL_DQ56	[13]
[13]	DDR4PL_DQ46	W8	IO_L9P_T1L4_AD12P_66	IO_L21P_T3L4_AD8P_66	AC3	DDR4PL_DQ57	[13]
[13]	DDR4PL_DQ47	Y8	IO_L9N_T1L5_AD12N_66	IO_L21N_T3L5_AD8N_66	AC2	DDR4PL_DQ59	[13]
[13]	DDR4PL_DQS5_P	Y7	IO_L10P_T1U6Q_AD4P_66	IO_L22P_T3U6D_AD0P_66	AA3	DDR4PL_DQS7_P	[13]
[13]	DDR4PL_DQS5_N	AA7	IO_L10N_T1U7Q_AD4N_66	IO_L22N_T3U7D_AD0N_66	AB3	DDR4PL_DQS7_N	[13]
[13]	DDR4PL_DQ41	AC8	IO_L11P_T1U8_GC_66	IO_L23P_T3U8_66	AB1	DDR4PL_DQ58	[13]
[13]	DDR4PL_DQ42	AC7	IO_L11N_T1U9_GC_66	IO_L23N_T3U9_66	AC1	DDR4PL_DQ62	[13]
[13]	DDR4PL_DQ45	AA8	IO_L12P_T1U10_GC_66	IO_L24P_T3U10_66	AA2	DDR4PL_DQ61	[13]
[13]	DDR4PL_DQ43	AB8	IO_L12N_T1U11_GC_66	IO_L24N_T3U11_66	AA1	DDR4PL_DQ63	[13]
[13]	PWR_SYNC	W9	IO_T1U12_66	IO_T3U12_66	Y1	IO_B66_Y1	[9]
				VCCO_66	AA4		
				VCCO_66	AD3		
[4]	VREF_DDR4PL	W10	VREF_66	VCCO_66	AD8		

VCC_1V2

XILINX_ZU+_B900_GENERIC
FPGA

FPGA HD Bank N

VCCO = VCC_IO_BN (max 3.3V)

Bank 46 on ZU4/ZU5 | Bank 47 on ZU7

U200-B

[2,8]	IO_BN_L1_AD11_K12_P	K12	IO_L1P_AD11P_N	IO_L7P_HDGC_AD5P_N	E14	IO_BN_L7_HDGC_AD5_E14_P	[2,8]
[2,8]	IO_BN_L1_AD11_K11_N	K11	IO_L1N_AD11N_N	IO_L7N_HDGC_AD5N_N	E13	IO_BN_L7_HDGC_AD5_E13_N	[2,8]
[2,8]	IO_BN_L2_AD10_K13_P	K13	IO_L2P_AD10P_N	IO_L8P_HDGC_AD4P_N	D14	IO_BN_L8_HDGC_AD4_D14_P	[2,8]
[2,8]	IO_BN_L2_AD10_J12_N	J12	IO_L2N_AD10N_N	IO_L8N_HDGC_AD4N_N	C13	IO_BN_L8_HDGC_AD4_C13_N	[2,8]
[2,8]	IO_BN_L3_AD9_H13_P	H13	IO_L3P_AD9P_N	IO_L9P_AD3P_N	D12	IO_BN_L9_AD3_D12_P	[2,8]
[2,8]	IO_BN_L3_AD9_H12_N	H12	IO_L3N_AD9N_N	IO_L9N_AD3N_N	C12	IO_BN_L9_AD3_C12_N	[2,8]
[2,8]	IO_BN_L4_AD8_H14_P	H14	IO_L4P_AD8P_N	IO_L10P_AD2P_N	C14	IO_BN_L10_AD2_C14_P	[2,8]
[2,8]	IO_BN_L4_AD8_G14_N	G14	IO_L4N_AD8N_N	IO_L10N_AD2N_N	B14	IO_BN_L10_AD2_B14_N	[2,8]
[2,8]	IO_BN_L5_HDGC_AD7_G13_P	G13	IO_L5P_HDGC_AD7P_N	IO_L11P_AD1P_N	A14	IO_BN_L11_AD1_A14_P	[2,8]
[2,8]	IO_BN_L5_HDGC_AD7_F13_N	F13	IO_L5N_HDGC_AD7N_N	IO_L11N_AD1N_N	A13	IO_BN_L11_AD1_A13_N	[2,8]
[2,8]	IO_BN_L6_HDGC_AD6_F12_P	F12	IO_L6P_HDGC_AD6P_N	IO_L12P_AD0P_N	B12	IO_BN_L12_AD0_B12_P	[2,8]
[2,8]	IO_BN_L6_HDGC_AD6_E12_N	E12	IO_L6N_HDGC_AD6N_N	IO_L12N_AD0N_N	A12	IO_BN_L12_AD0_A12_N	[2,8]
				VCCO_N	D13		
				VCCO_N	G12		

VCC_IO_BN

XILINX_ZU+_B900_GENERIC
FPGA

FPGA HD Bank O

VCCO = VCC_IO_BO (max 3.3V)

Bank 45 on ZU4/ZU5 | Bank 48 on ZU7

U200-C

[2,8]	IO_BO_L1_AD15_L15_P	L15	IO_L1P_AD15P_O	IO_L7P_HDGC_O	E17	IO_BO_L7_HDGC_E17_P	[2,8]
[2,8]	IO_BO_L1_AD15_L14_N	L14	IO_L1N_AD15N_O	IO_L7N_HDGC_O	D17	IO_BO_L7_HDGC_D17_N	[2,8]
[2,8]	IO_BO_L2_AD14_K15_P	K15	IO_L2P_AD14P_O	IO_L8P_HDGC_O	E15	IO_BO_L8_HDGC_E15_P	[2,8]
[2,8]	IO_BO_L2_AD14_K14_N	K14	IO_L2N_AD14N_O	IO_L8N_HDGC_O	D15	IO_BO_L8_HDGC_D15_N	[2,8]
[2,8]	IO_BO_L3_AD13_J15_P	J15	IO_L3P_AD13P_O	IO_L9P_AD11P_O	D16	IO_BO_L9_AD11_D16_P	[2,8]
[2,8]	IO_BO_L3_AD13_J14_N	J14	IO_L3N_AD13N_O	IO_L9N_AD11N_O	C16	IO_BO_L9_AD11_C16_N	[2,8]
[2,8]	IO_BO_L4_AD12_J16_P	J16	IO_L4P_AD12P_O	IO_L10P_AD10P_O	C17	IO_BO_L10_AD10_C17_P	[2,8]
[2,8]	IO_BO_L4_AD12_H16_N	H16	IO_L4N_AD12N_O	IO_L10N_AD10N_O	B16	IO_BO_L10_AD10_B16_N	[2,8]
[2,8]	IO_BO_L5_HDGC_G16_P	G16	IO_L5P_HDGC_O	IO_L11P_AD9P_O	A17	IO_BO_L11_AD9_A17_P	[2,8]
[2,8]	IO_BO_L5_HDGC_G15_N	G15	IO_L5N_HDGC_O	IO_L11N_AD9N_O	A16	IO_BO_L11_AD9_A16_N	[2,8]
[2,8]	IO_BO_L6_HDGC_F16_P	F16	IO_L6P_HDGC_O	IO_L12P_AD8P_O	B15	IO_BO_L12_AD8_B15_P	[2,8]
[2,8]	IO_BO_L6_HDGC_F15_N	F15	IO_L6N_HDGC_O	IO_L12N_AD8N_O	A15	IO_BO_L12_AD8_A15_N	[2,8]
				VCCO_O	E16		
				VCCO_O	H15		

VCC_IO_BO

XILINX_ZU+_B900_GENERIC
FPGA

FPGA PS DDR Bank 504

VCCO = VCC_1V2

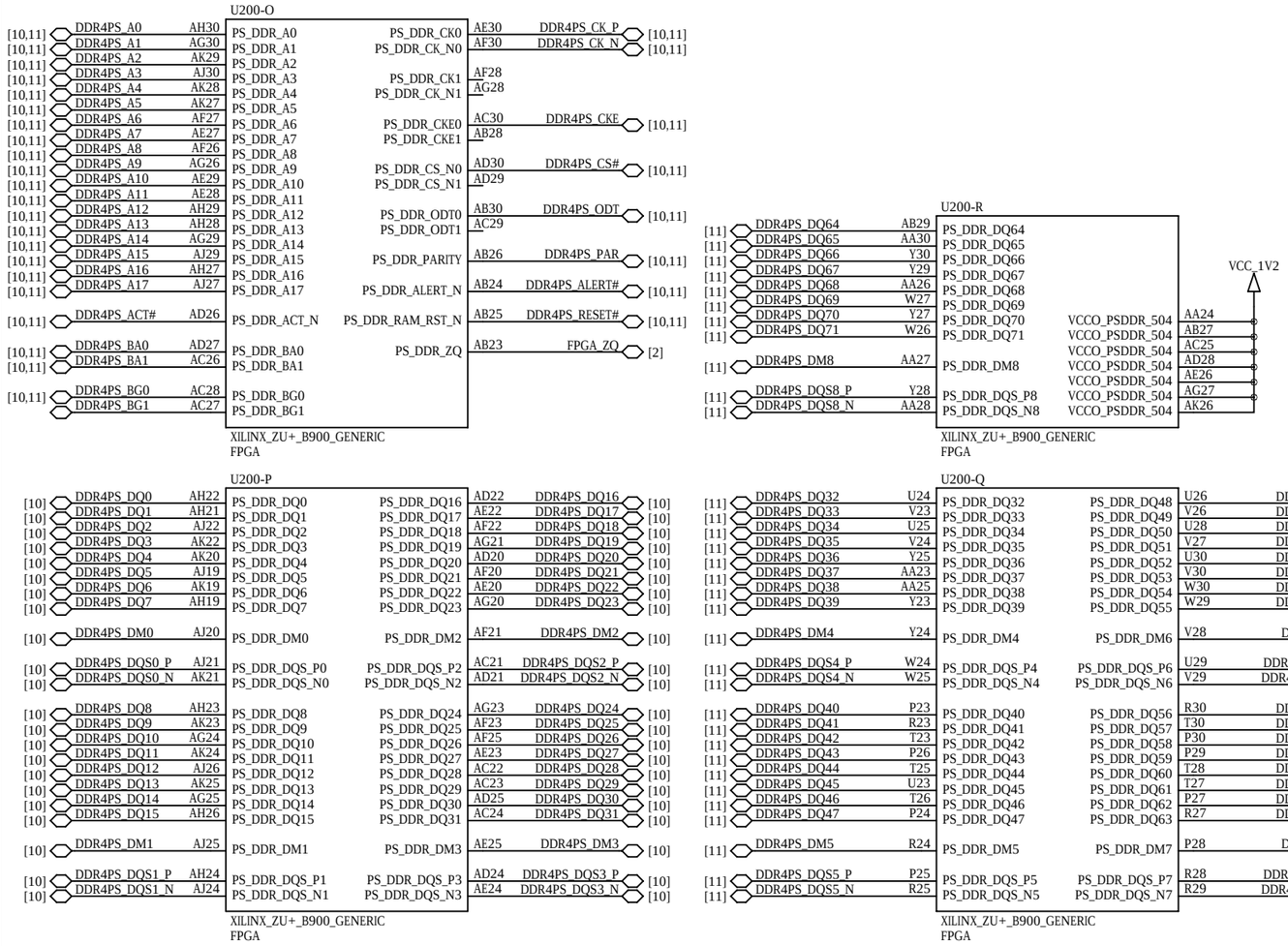

FPGA PS Bank 500

VCCO = VCC_1V8

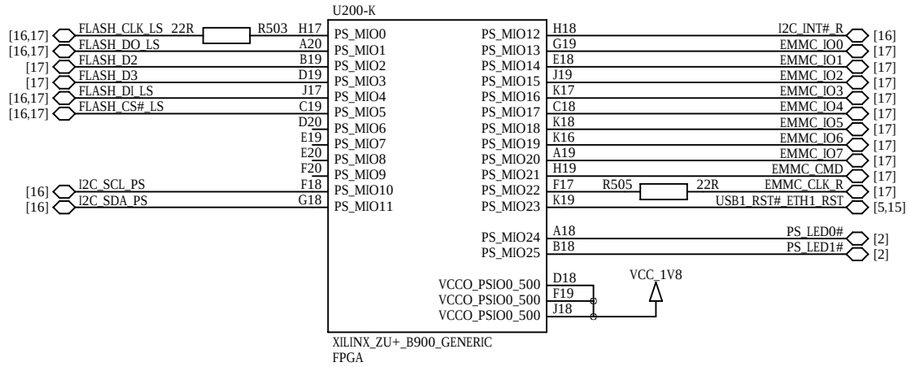

FPGA PS Bank 501

VCCO = VCC_CFG_MIO

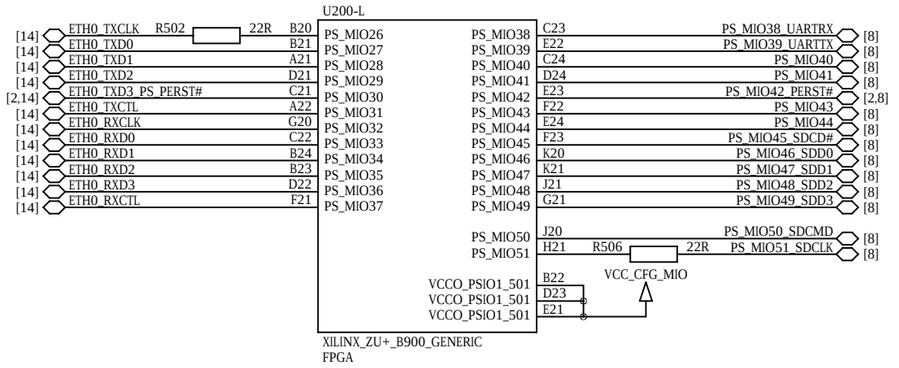

FPGA PS Bank 502

VCCO = VCC_1V8

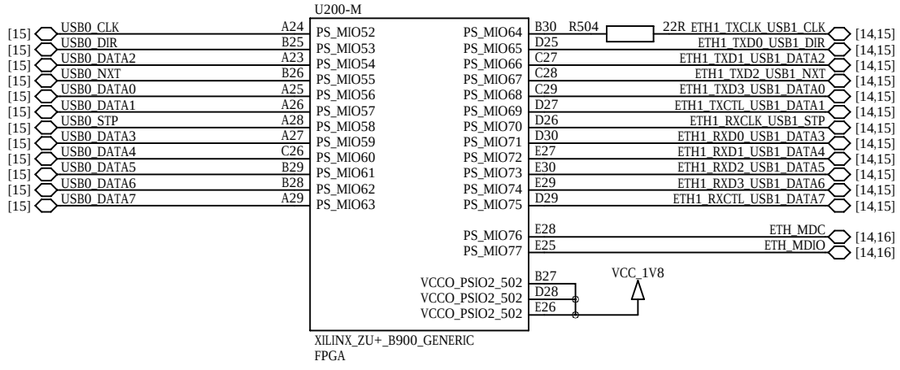

USB1/ETH1 Selection

default is ETH1 enabled, USB1 in reset

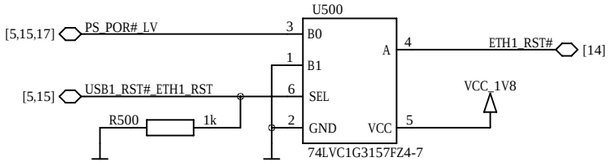

Reset Circuit

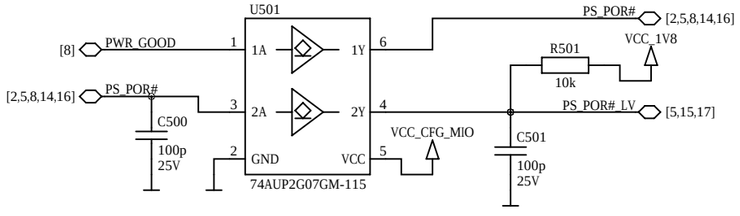

FPGA Ground

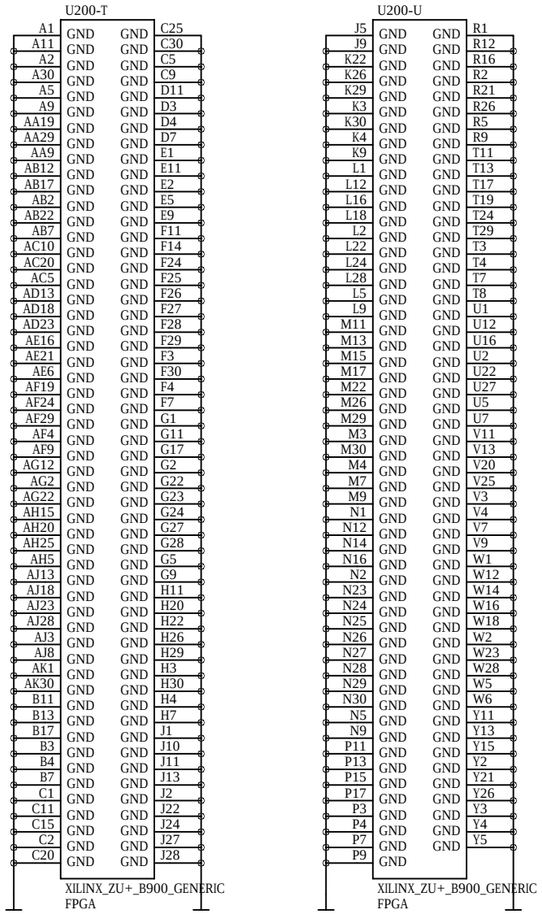

FPGA MGT Power

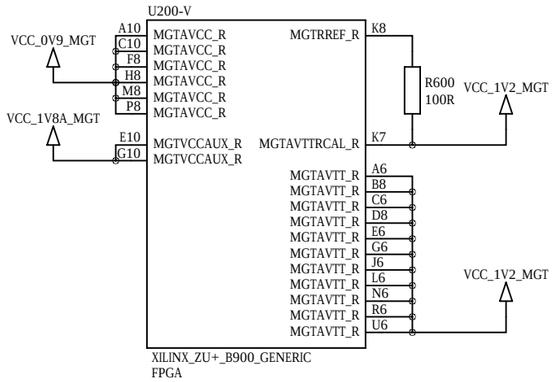

FPGA Battery Voltage

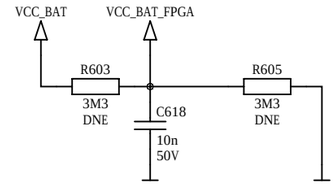

ADC Power

not included in user schematics

This part is intentionally left blank.

FPGA GTR Power

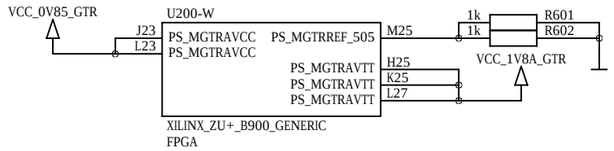

VCU Power

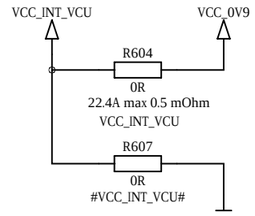

MGT Power Filters

not included in user schematics

This part is intentionally left blank.

FPGA Power

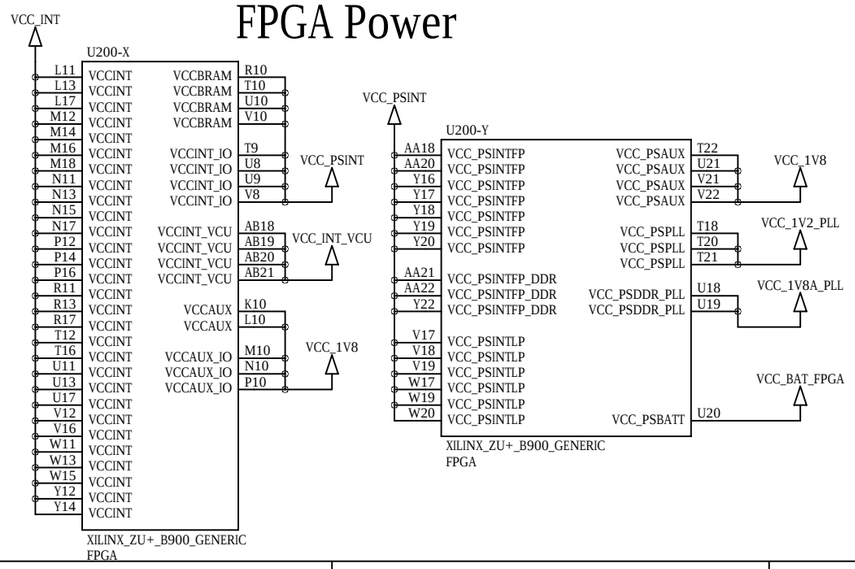

PLL and GTR Power Filters

not included in user schematics

This part is intentionally left blank.

FPGA Decoupling

not included in user schematics

This part is intentionally left blank.

Power Decoupling

not included in user schematics

This part is intentionally left blank.

Module Connector A

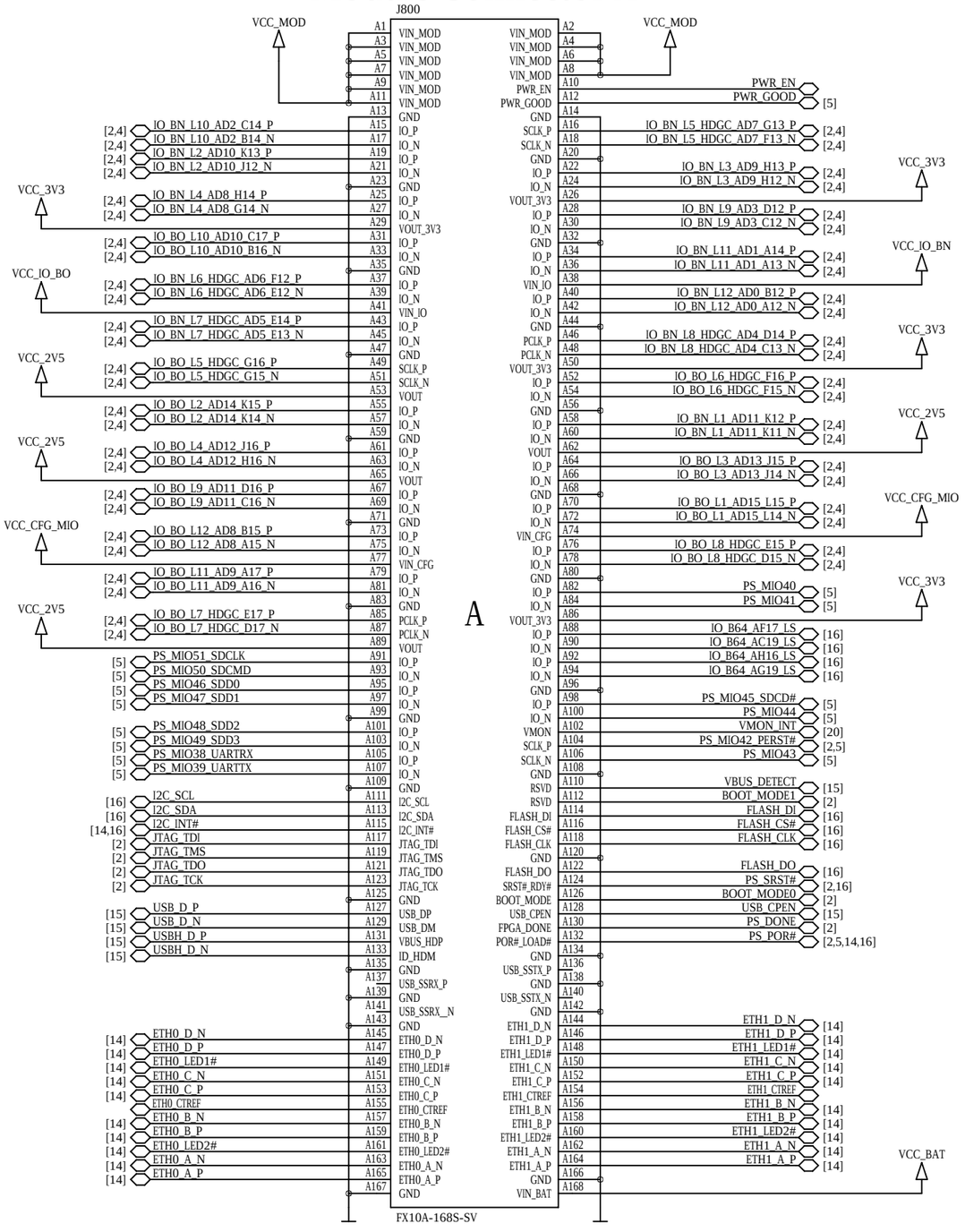

Module Connector B

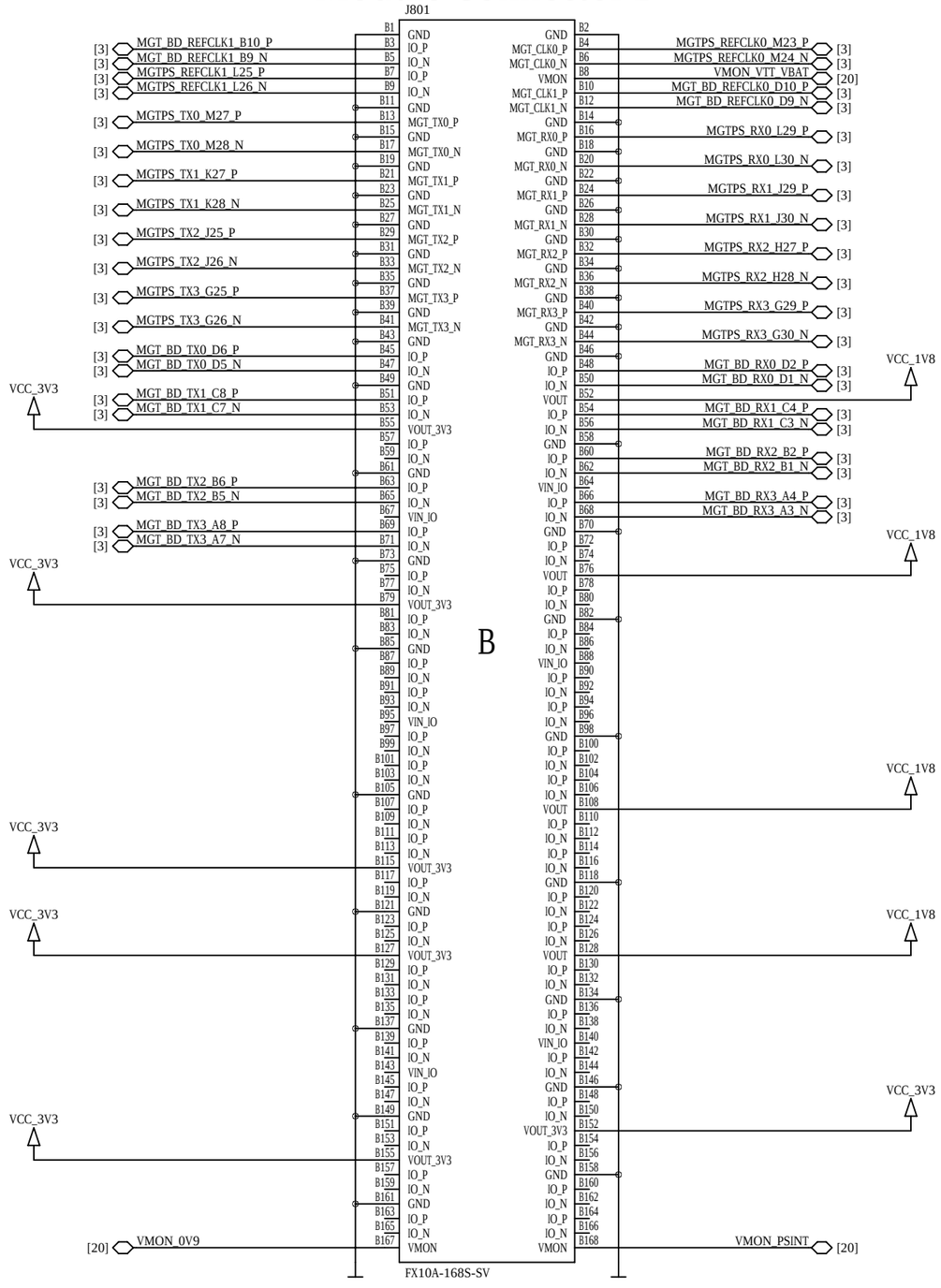

ENCLUSTRA	Copyright	© 2021 by Enclustra GmbH	Sheet Name	08_MODULE_CONNECTORS_A_B	Customer No	0000	Revision	R2.0	DNE = do not equip	Confidential
	Company	Enclustra FPGA Solution Center	Project	Mercury+ XU9	Project No	471	Designed	MHEI	Date 13 Apr 2021	Sheet/sheets 8 / 23

Module Connector C

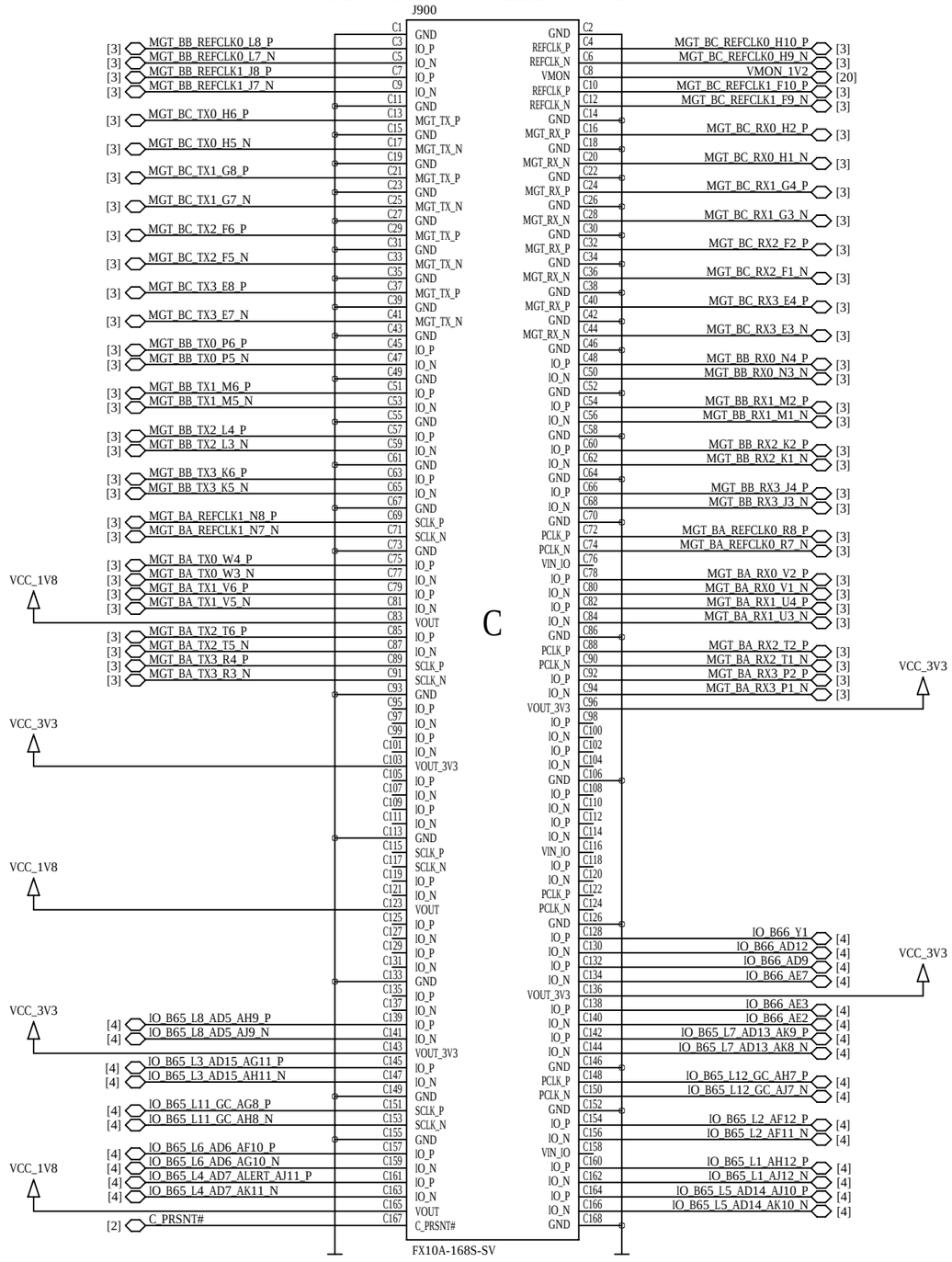

ENCLUSTRA	Copyright © 2021 by Enclustra GmbH	Sheet Name 09_MODULE_CONNECTOR_C	Customer No 0000	Revision R2.0	DNE = do not equip	Confidential	
	Company Enclustra FPGA Solution Center	Project Mercury+ XU9	Project No 471	Designed MHEI	Date 13 Apr 2021	Sheet/sheets 9 / 23	

PS DDR4 SDRAM

Bytes 0-1

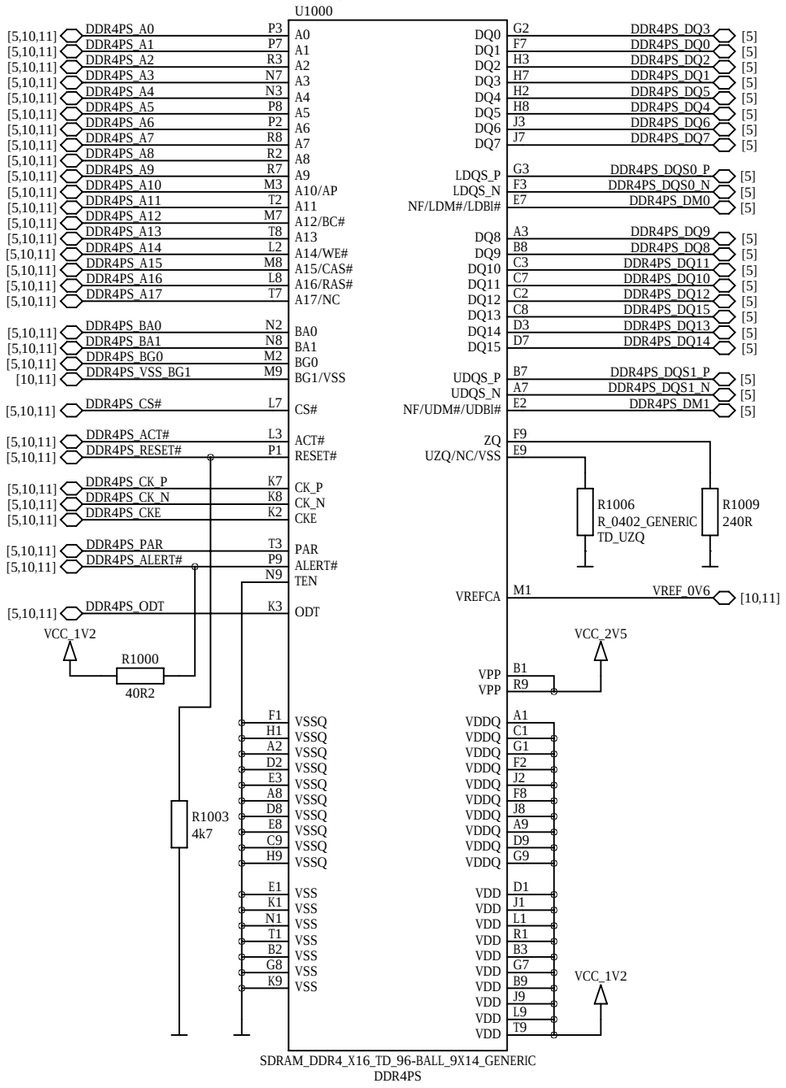

Bytes 2-3

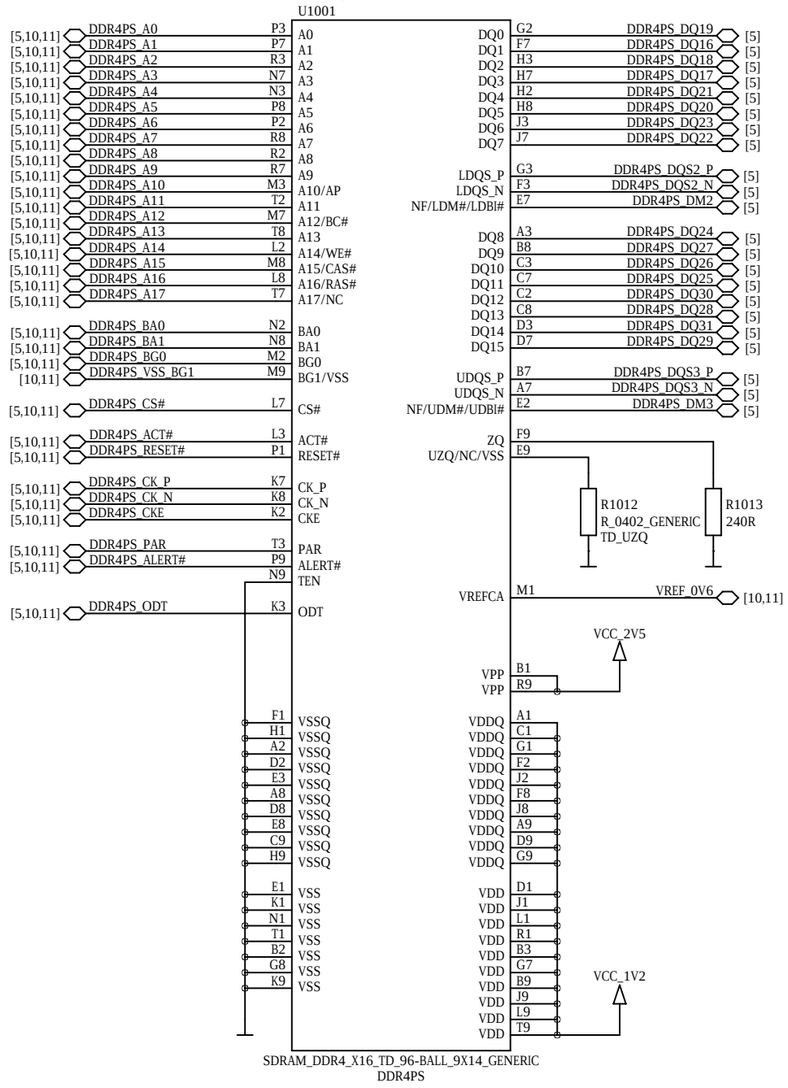

DDR4 Termination

not included in user schematics

This part is intentionally left blank.

PS DDR4 SDRAM

Bytes 4-5

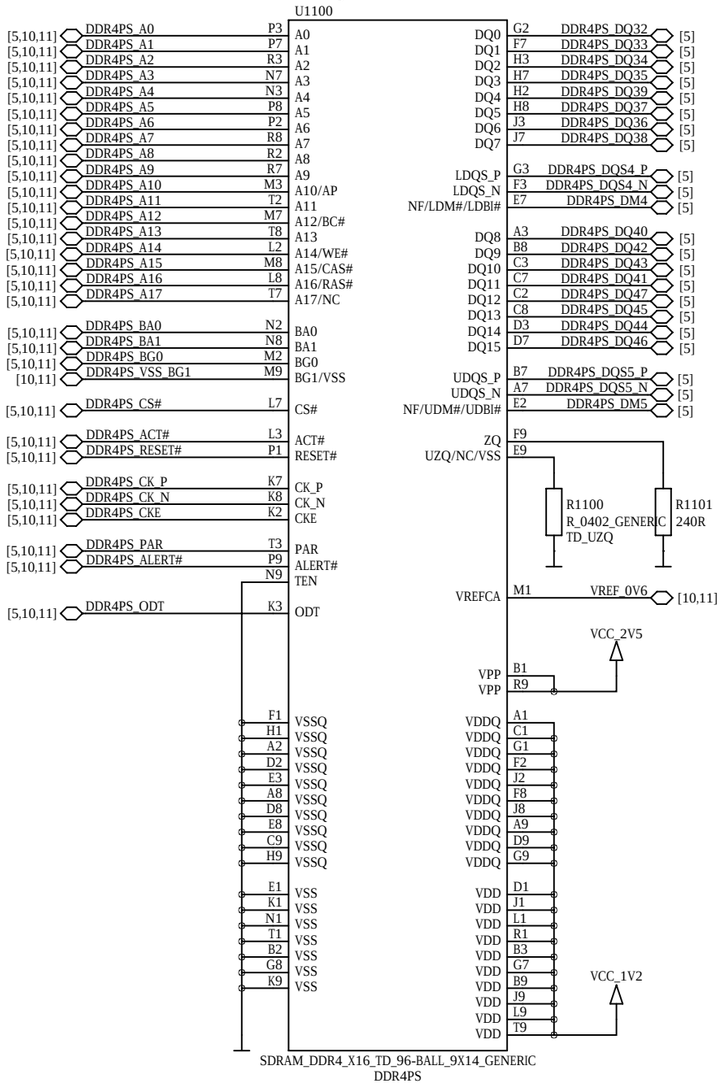

Bytes 6-7

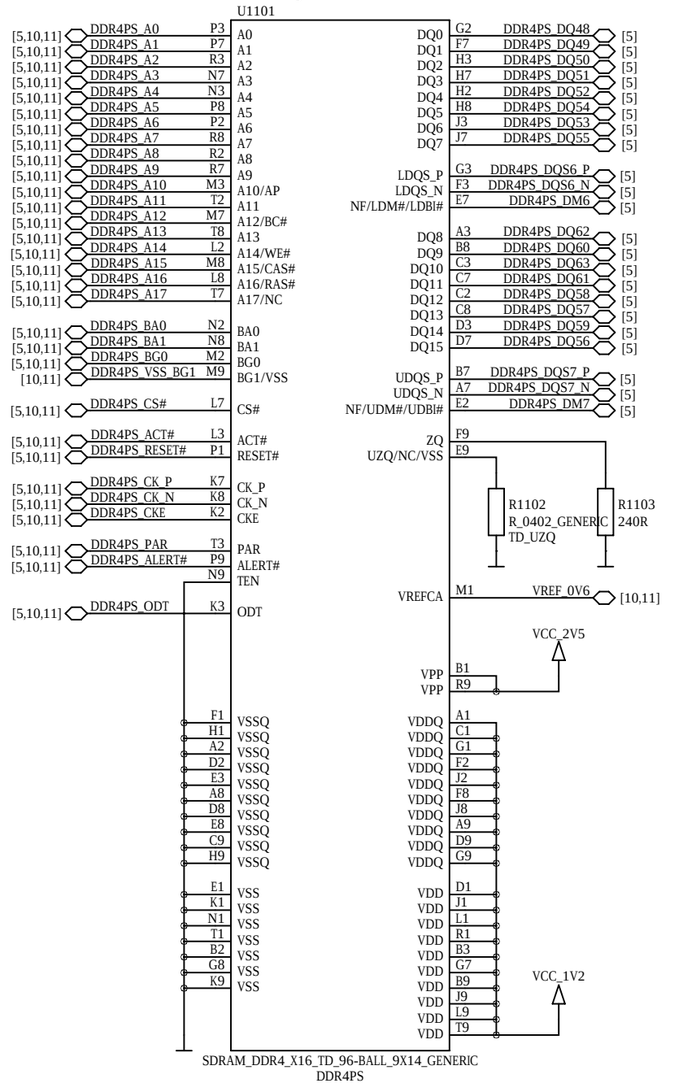

Byte 8 (ECC)

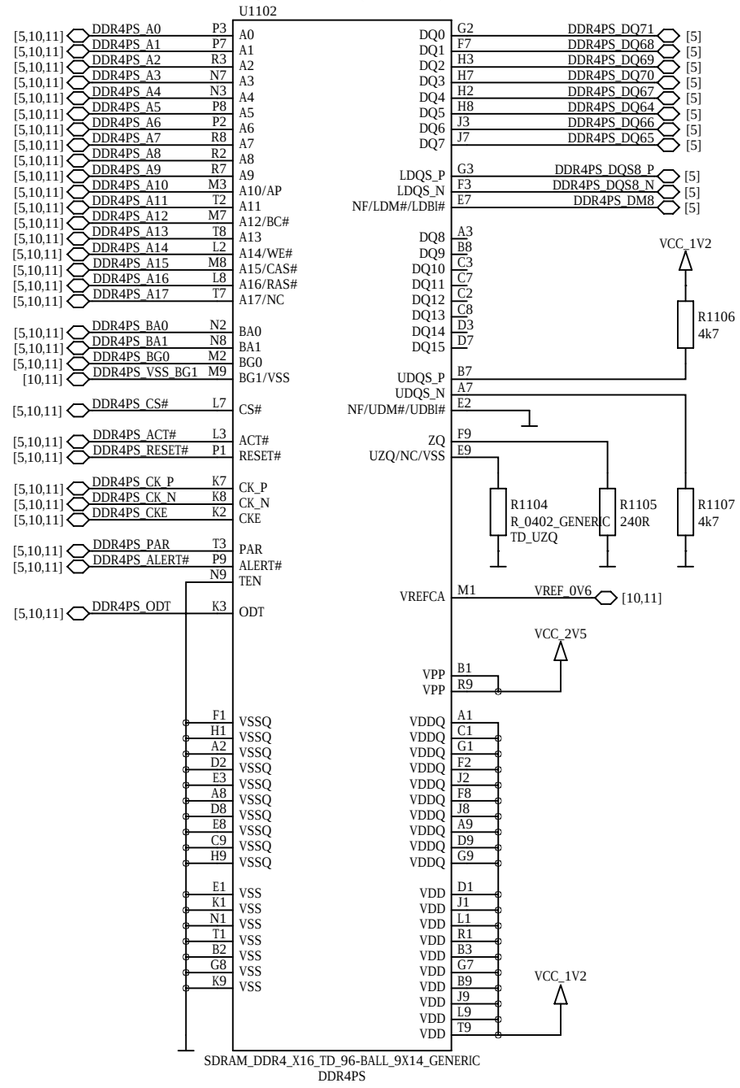

DDR4 Decoupling

not included in user schematics

This part is intentionally left blank.

PL DDR4 SDRAM

Bytes 0-1

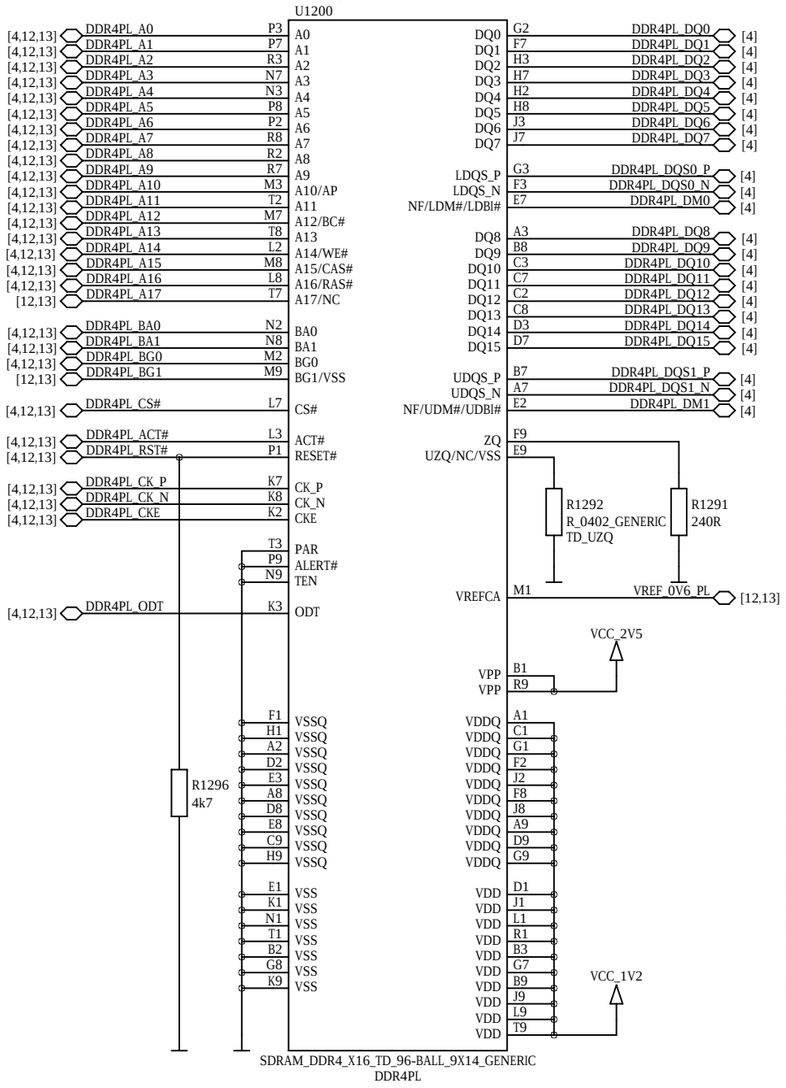

Bytes 2-3

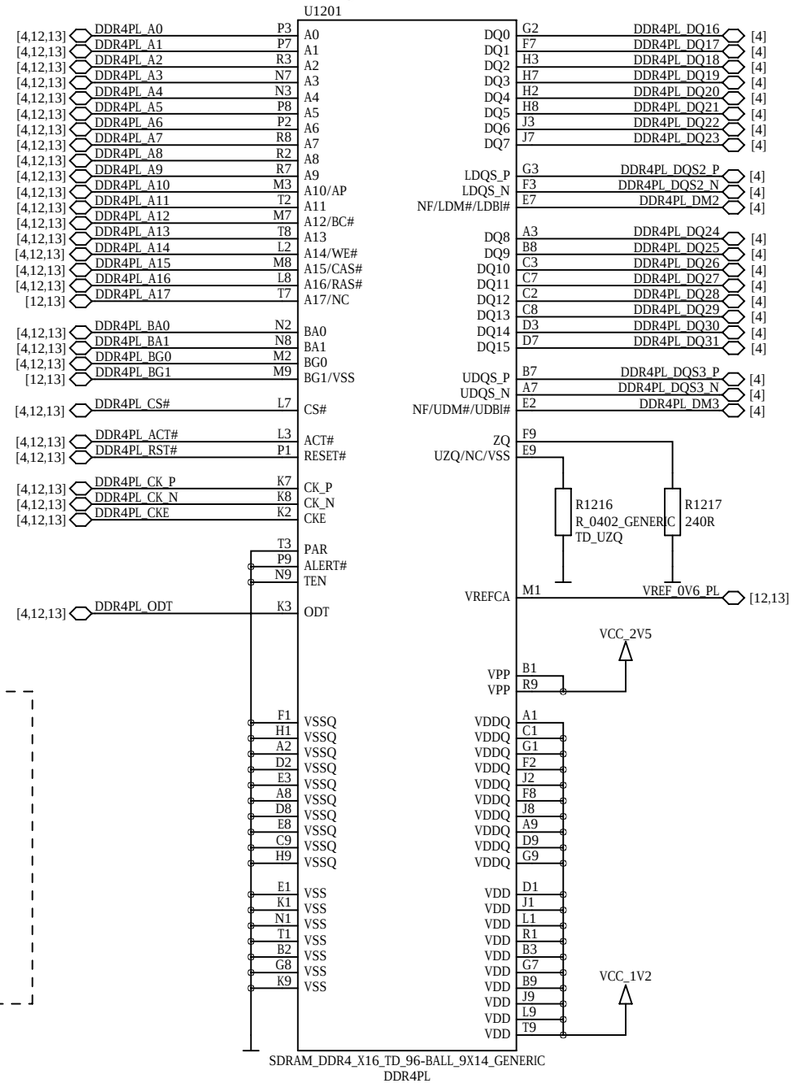

BG1/A17 Selection

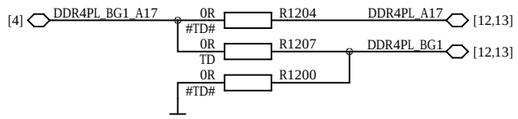

PL DDR4 Reference Voltage

not included in user schematics

This part is intentionally left blank.

DDR4 Termination

not included in user schematics

This part is intentionally left blank.

PL DDR4 SDRAM

Bytes 4-5

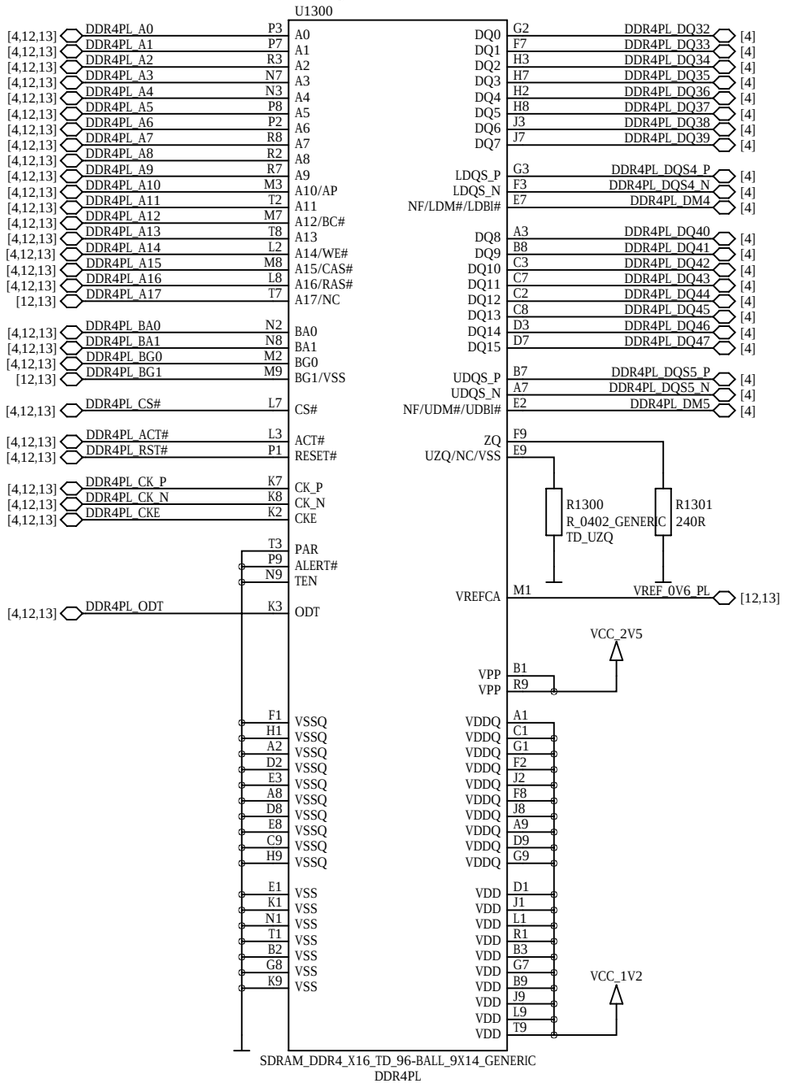

Bytes 6-7

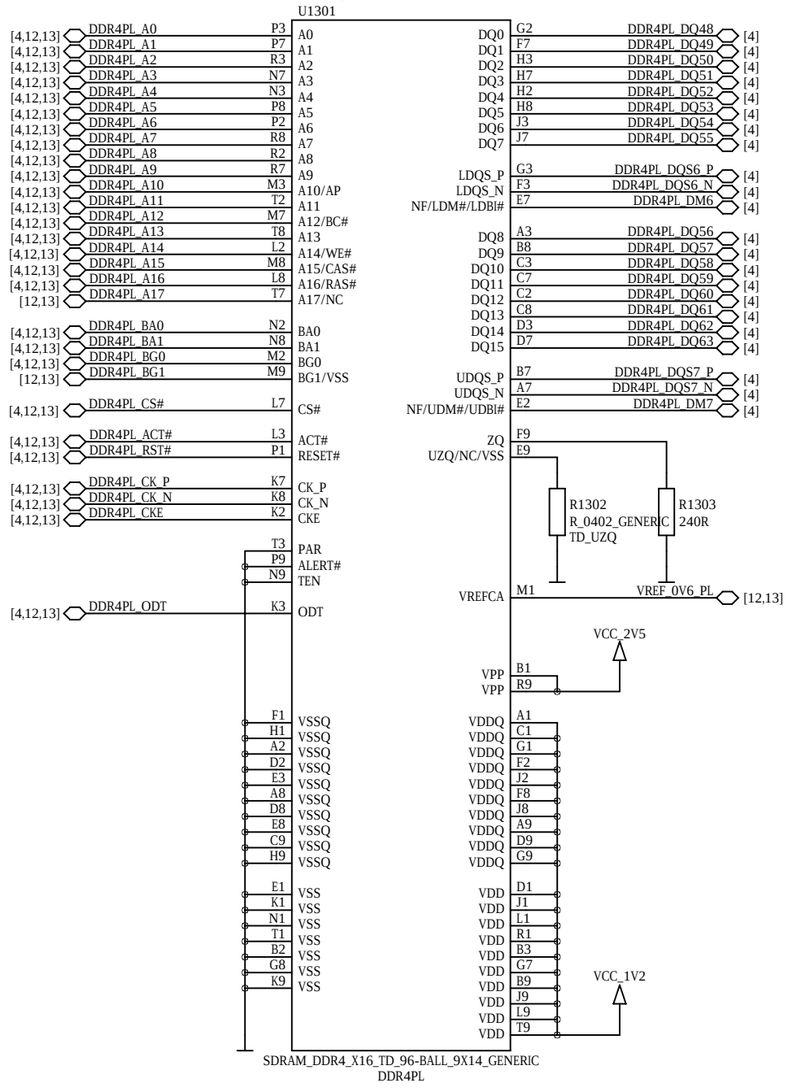

PL DDR4 Decoupling

not included in user schematics

This part is intentionally left blank.

Gigabit Ethernet PHY 0

not available when using PS PCIe

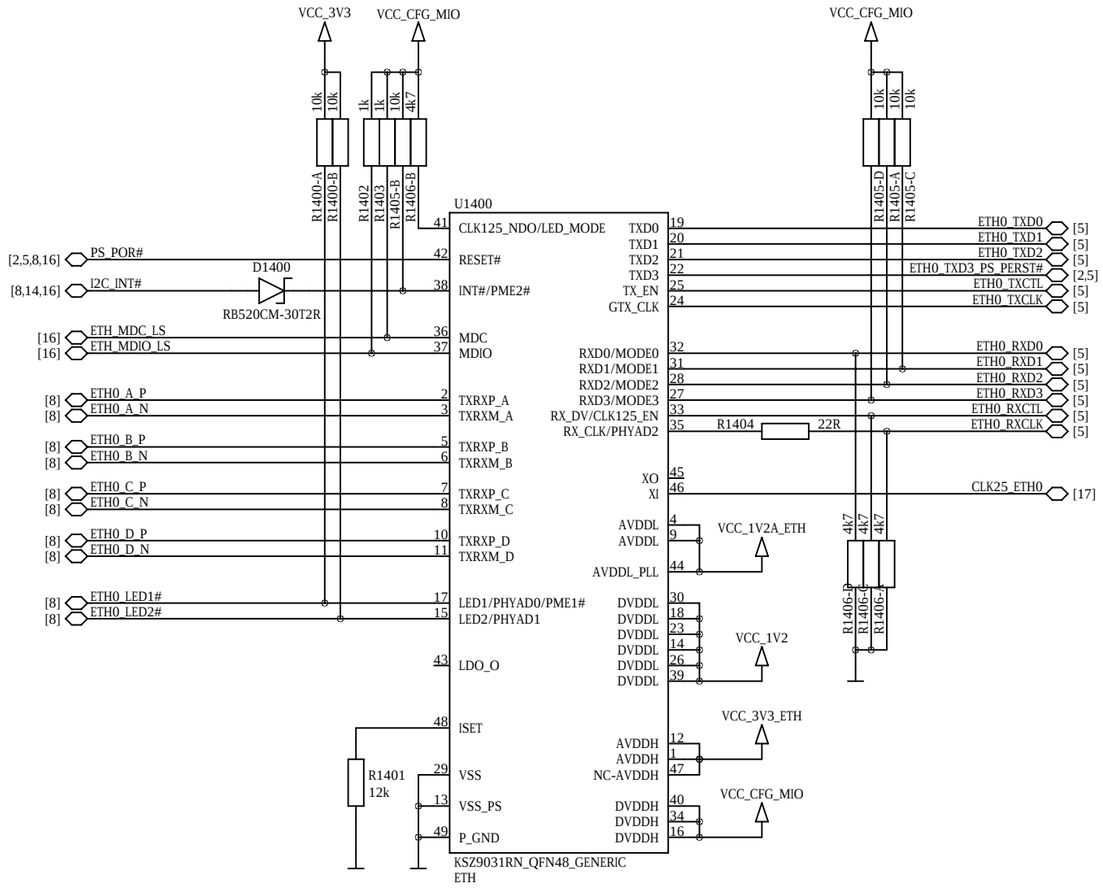

MODE<3:0> = 1110 -> RGMII, all capabilities
LED_Mode Pull up = Single LED
PhyAddress <2:0> = 011 -> 3
LED1 and LED2 are active low

Gigabit Ethernet PHY 1

not available when using USB1

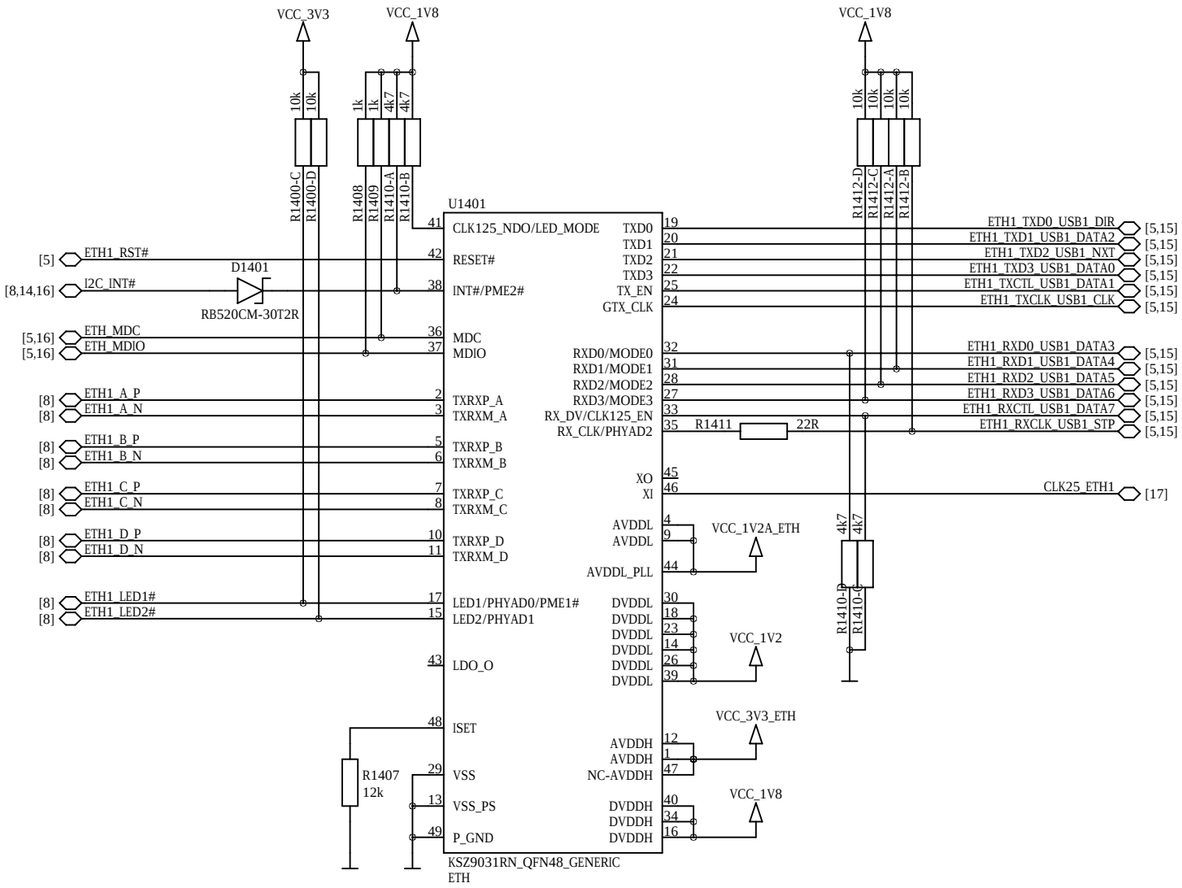

MODE<3:0> = 1110 -> RGMII, all capabilities
LED_Mode Pull up = Single LED
PhyAddress <2:0> = 111 -> 7
LED1 and LED2 are active low

Ethernet Power Filters

not included in user schematics

This part is intentionally left blank.

USB 2.0 Device/Host PHY 0

A-Device ID=GND, B-Device ID=Float, Not Used ID=VDD33

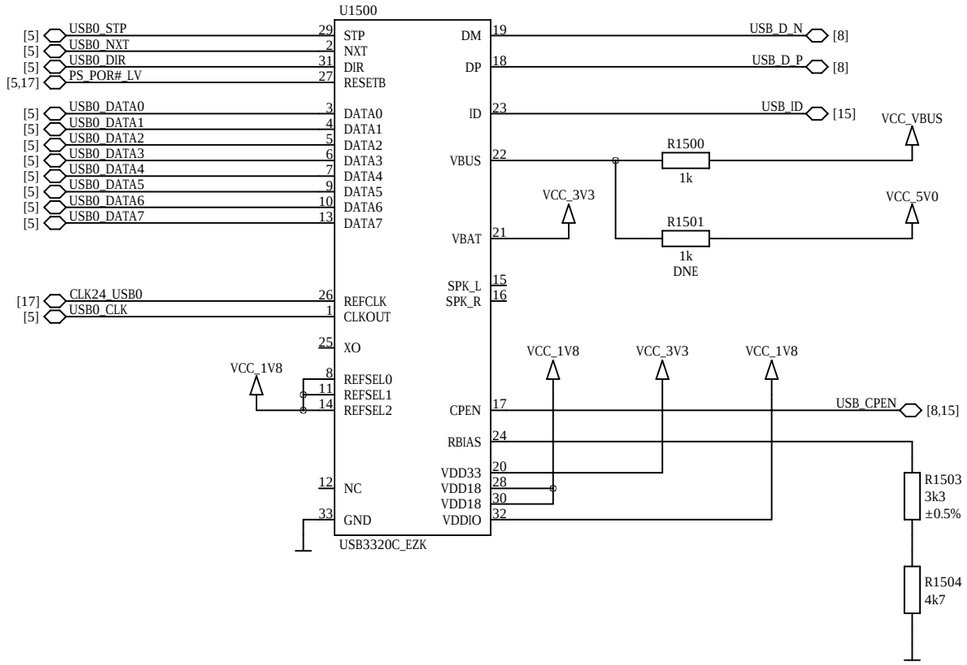

USB 2.0 Host PHY 1

not available when using Ethernet 1

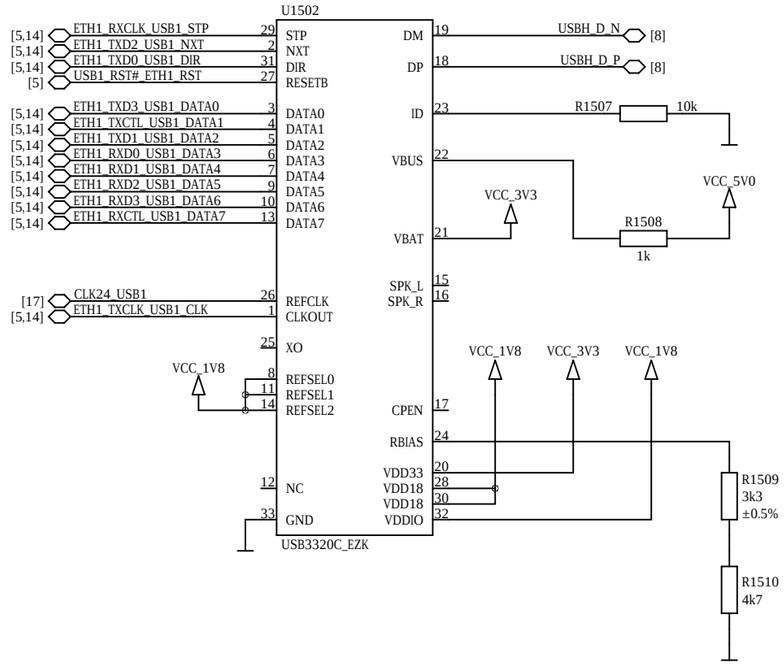

USB 2.0 Host/Device Mode

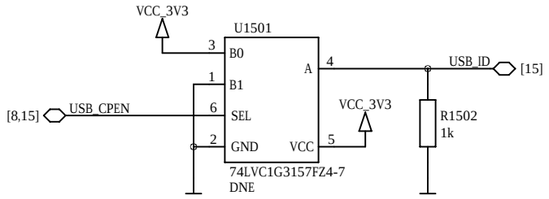

USB 2.0 VBUS Detect

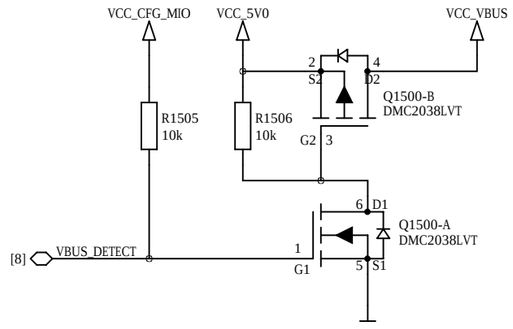

USB 2.0 Power Decoupling

not included in user schematics

This part is intentionally left blank.

ENCLUSTRA	Copyright © 2021 by Enclustra GmbH	Sheet Name 15_USB2_PHYS	Customer No 0000	Revision R2.0	DNE = do not equip	Confidential	
	Company Enclustra FPGA Solution Center	Project Mercury+ XU9	Project No 471	Designed MHEI	Date 13 Apr 2021	Sheet/sheets 15 / 23	

Flash Level Shifter

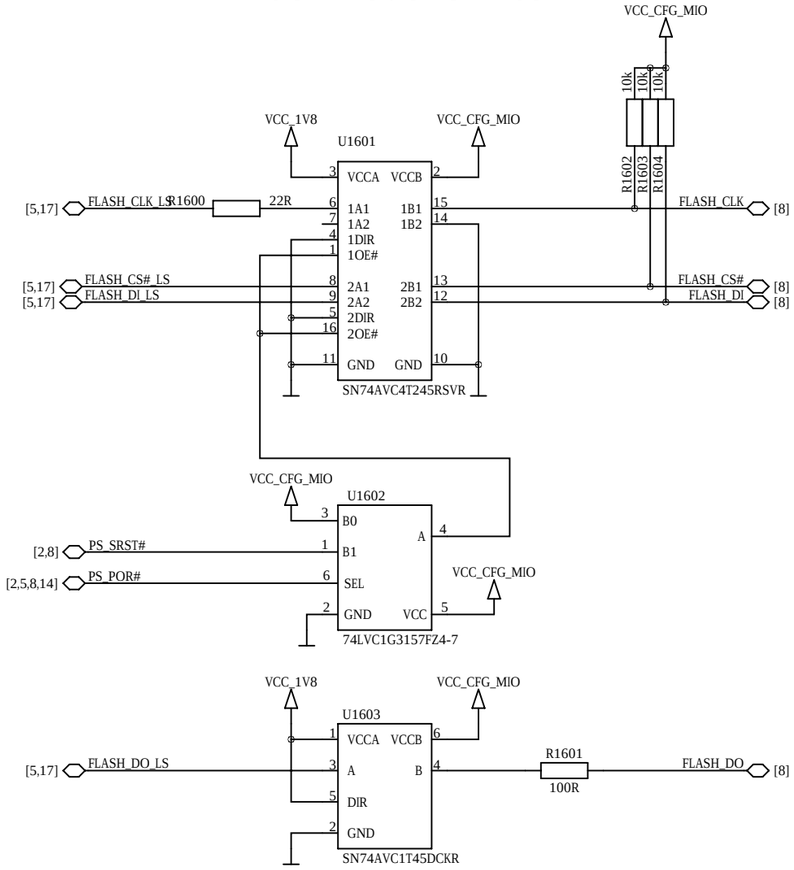

Real-time Clock

optional

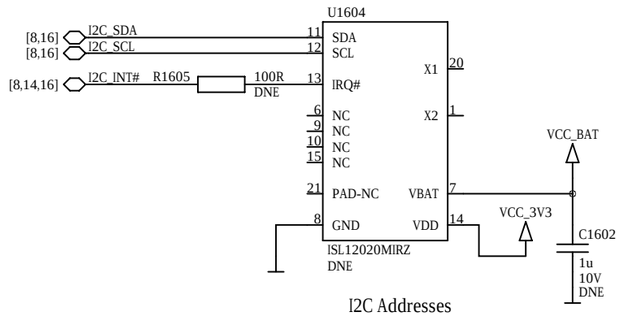

I2C Addresses

RTC registers: 1 1 0 1 1 1 1 Rw

User SRAM: 1 0 1 0 1 1 1 Rw

PS I2C Level Shifter

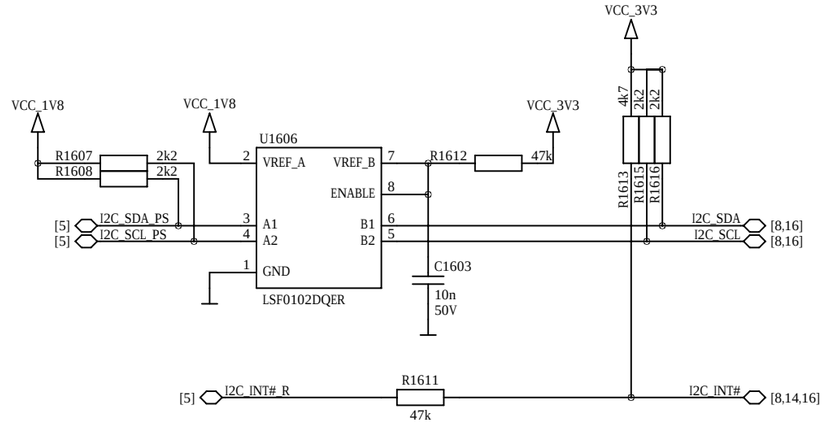

RTC Crystal

32.768 kHz

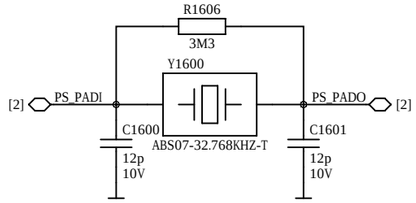

PL I2C Level Shifter

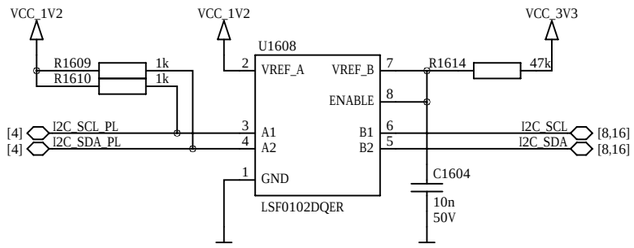

IO Level Shifter

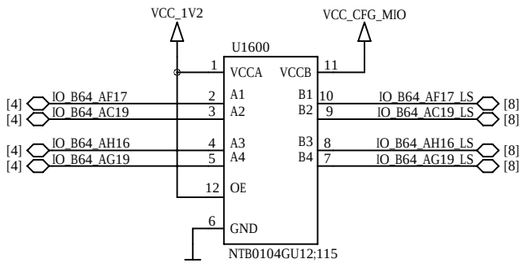

Secure EEPROM

for Enclustra use only

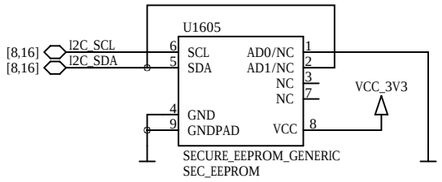

ATSHA204A-MAHDA-T I2C Address: 1 1 0 0 1 0 0 Rw

DS28CN01U-A00+ I2C Address: 1 0 1 1 1 0 0 Rw

MDIO Level Shifter

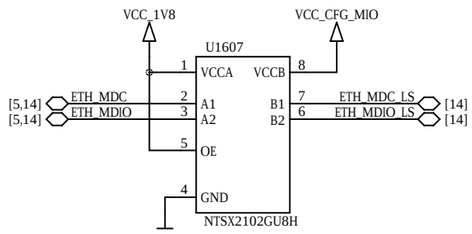

ENCLUSTRA	Copyright © 2021 by Enclustra GmbH	Sheet Name 16_LEVEL_SHIFTERS_EEPROM	Customer No 0000	Revision R2.0	DNE = do not equip	Confidential
	Company Enclustra FPGA Solution Center	Project Mercury+ XU9	Project No 471	Designed MHEI	Date 13 Apr 2021	Sheet/sheets 16 / 23

Quad SPI Flash

pin compatible with Micron N25Q512A11G1240F

Micron requires VCC_FLASH = 1.8V

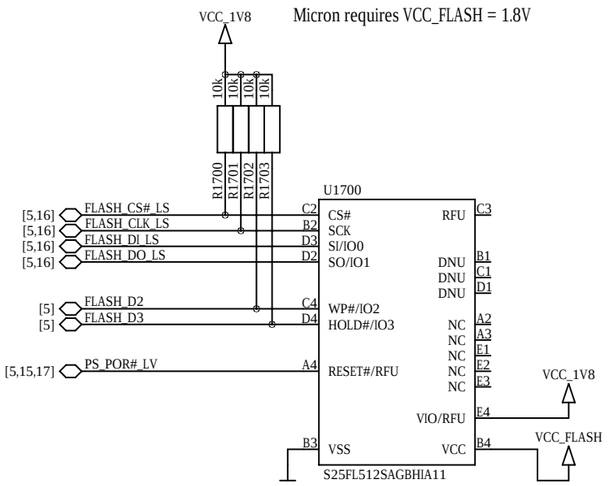

eMMC Flash

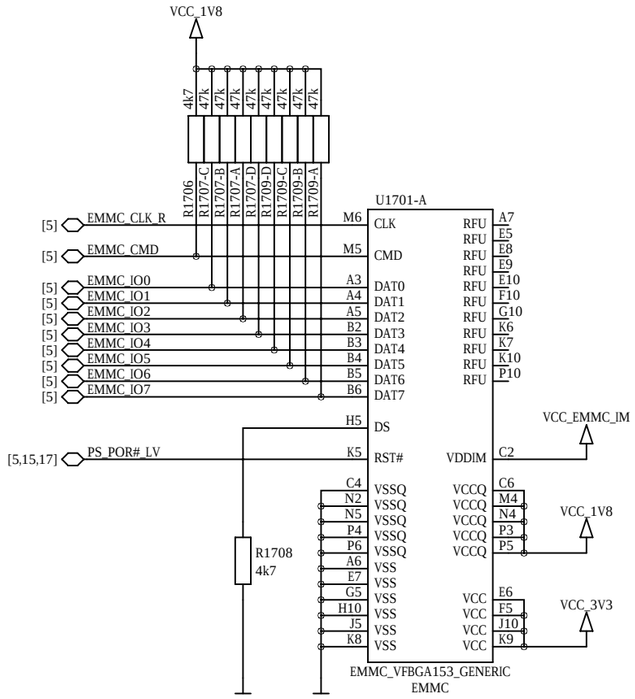

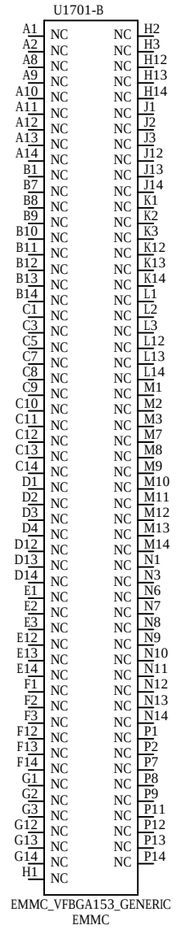

PS 33.3 MHz Oscillator

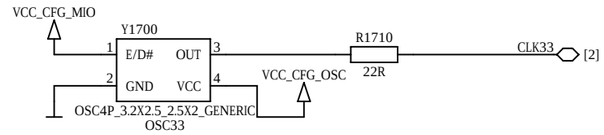

ETH 25 MHz Oscillator

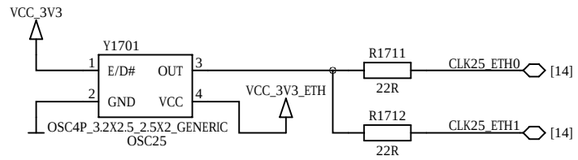

USB 24 MHz Oscillator

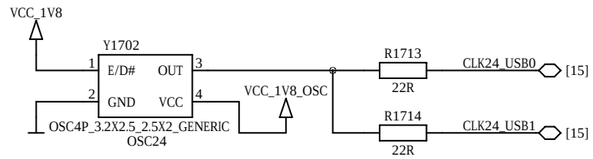

Oscillator Power Filters

not included in user schematics

This part is intentionally left blank.

Quad SPI Power

not included in user schematics

This part is intentionally left blank.

eMMC Power

not included in user schematics

This part is intentionally left blank.

Dual Buck Converter

channel 1: 3.3V 6A 5% channel 2: 1.2V 6A 5%

not included in user schematics

This part is intentionally left blank.

Supported Voltage Ranges

Power Rail	Direction	Range	Tolerance
VCC_MOD	input	5 - 15V	±5%
VCC_CFG_MIO	input	1.8 - 3.3V	±5%
VCC_IO_BN	input	1.2 - 3.3V	±5%
VCC_IO_BO	input	1.2 - 3.3V	±5%
VCC_BAT	input	2.7 - 3.6V *	-
VCC_1V8	output	1.8V	±5%
VCC_2V5	output	2.5V	±5%
VCC_3V3	output	3.3V	±5%

When using VCC_IO_BN, VCC_IO_BO at 3.3V, the tolerance is -5% +3%.

*Voltage range valid for LDO assembly option for VCC_BAT_FPGA (default assembly variant).

Buck Converter

0.72/0.85/0.9V 35A 3%

not included in user schematics

This part is intentionally left blank.

Input Power Filter

not included in user schematics

This part is intentionally left blank.

LDO 5.0V 0.15A

not included in user schematics

This part is intentionally left blank.

Dual Buck Converter

channel 1: 0.85/0.9V 6A 3% channel 2: 0.9V 6A 3%

not included in user schematics

This part is intentionally left blank.

LDO 2.5V 0.5A

not included in user schematics

This part is intentionally left blank.

Power Converter Synchronization

not included in user schematics

This part is intentionally left blank.

DDR4 Termination Voltage Regulator

not included in user schematics

This part is intentionally left blank.

DDR4 VREF Decoupling

not included in user schematics

This part is intentionally left blank.

Power Sequencing

not included in user schematics

This part is intentionally left blank.

Buck Converter 1.8V

1.8V 3A 3%

not included in user schematics

This part is intentionally left blank.

LDO 1.2V 10 mA

not included in user schematics

This part is intentionally left blank.

Voltage Monitoring

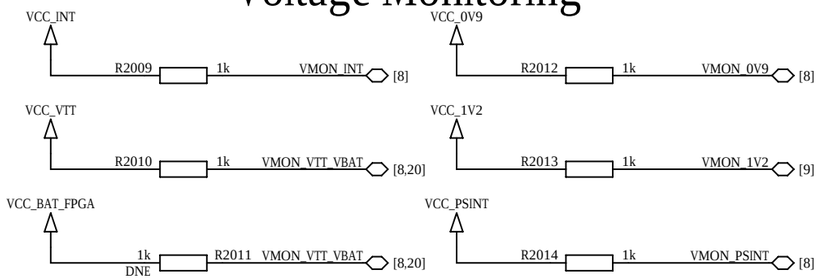

LDO 0.85V 0.5A

used for -1LE, -2LI, -3E speed grade SoC FPGAs

not included in user schematics

This part is intentionally left blank.

ENCLUSTRA	Copyright	© 2021 by Enclustra GmbH	Sheet Name	20_POWER_1.8V_0V85	Customer No	0000	Revision	R2.0	DNE = do not equip	Confidential
	Company	Enclustra FPGA Solution Center	Project	Mercury+ XU9	Project No	471	Designed	MHEI	Date 13 Apr 2021	Sheet/sheets 20 / 23

Module Mounting Holes M3

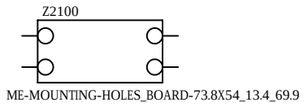

PCB Fiducials

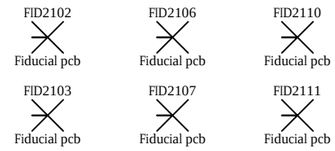

Panel Fiducials

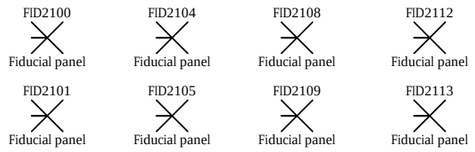

FPGA Heat Sink

optional

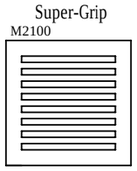

PCB / Logo / Pin-1 Marking / Text

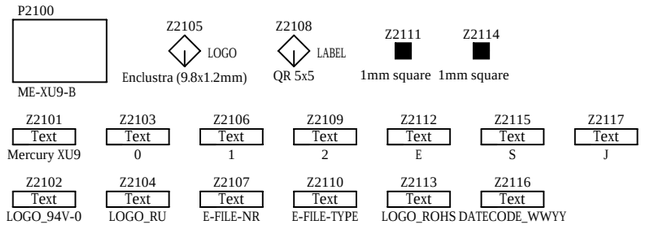

ENCLUSTRA	Copyright	© 2021 by Enclustra GmbH	Sheet Name	21_MECHANICS	Customer No	0000	Revision	R2.0	DNE = do not equip	Confidential
	Company	Enclustra FPGA Solution Center	Project	Mercury+ XU9	Project No	471	Designed	MHEI	Date 13 Apr 2021	Sheet/sheets 21 / 23

Component Variants

FPGA	DDR4PS		DDR4PL		TD_UZQ		TD	eMMC	Ethernet PHY	OSC27	OSC24
Part U200A XCZU4CG-1FBVB900E EN102158	Part U1000A:1 K4A8G165WB-BIRC EN101979	Part U1000B:1 K4A4G165WE-BIRC EN101868	Part U1200A:1 H5AN4G6NAFR-UHC EN101655	Part U1200B:1 K4A4G165WE-BIRC EN101868	Part R1006A 0R EN101361	Part R1006B 240R EN101382	PS_DDR R1005, R1014 or R1015	Part U1701A H26M52208FPRI EN101865	Part U1400A KSZ9031RNXIA EN101934	Part Y301A ASEMPC_27.000MHZ-LR-T EN101608	Part Y1702A O_24.0-JO32-B-1V3-1-T1-LF EN104079
Part U200B XCZU4EV-2FBVB900I EN102403	Part U1000C:1 K4AAG165WB-MCRC EN102970		Part U1200A:2 MT40A256M16GE-083E EN101632		Part R1012A 0R EN101361	Part R1012B 240R EN101382		Part U1701B EMMC16G-W525-X01U EN101932		Part Y301B ASEMPC-27.000MHZ-XR-T EN101609	Part Y1702B ECS-3225MVQ-240-BP-TR EN104080
Part U200C XCZU5EV-1FBVB900I EN102159	Part U1001A:1 K4A8G165WB-BIRC EN101979	Part U1001B:1 K4A4G165WE-BIRC EN101868	Part U1200C:1 K4AAG165WB-MCRC EN102970		Part R1100A 0R EN101361	Part R1100B 240R EN101382		Part U1701C EMMC16G-IB29-PZ90 EN102591	Part U1401A KSZ9031RNXIA EN101934		
Part U200D XCZU5EV-2FBVB900I EN102404	Part U1001C:1 K4AAG165WB-MCRC EN102970		Part U1201A:1 H5AN4G6NAFR-UHC EN101655	Part U1201B:1 K4A4G165WE-BIRC EN101868	Part R1102A 0R EN101361	Part R1102B 240R EN101382					
Part U200E XCZU7EV-2FBVB900I EN102160	Part U1100A:1 K4A8G165WB-BIRC EN101979	Part U1100B:1 K4A4G165WE-BIRC EN101868	Part U1201A:2 MT40A256M16GE-083E EN101632		Part R1104A 0R EN101361	Part R1104B 240R EN101382					
Part U200F XCZU7EV-3FBVB900E EN102351	Part U1100C:1 K4AAG165WB-MCRC EN102970		Part U1201C:1 K4AAG165WB-MCRC EN102970								
	Part U1101A:1 K4A8G165WB-BIRC EN101979	Part U1101B:1 K4A4G165WE-BIRC EN101868	Part U1300A:1 H5AN4G6NAFR-UHC EN101655	Part U1300B:1 K4A4G165WE-BIRC EN101868	Part R1292A 0R EN101361	Part R1292B 240R EN101382					
	Part U1101C:1 K4AAG165WB-MCRC EN102970		Part U1300A:2 MT40A256M16GE-083E EN101632		Part R1216A 0R EN101361	Part R1216B 240R EN101382					
	Part U1102A:1 K4A8G165WB-BIRC EN101979	Part U1102B:1 K4A4G165WE-BIRC EN101868	Part U1300C:1 K4AAG165WB-MCRC EN102970		Part R1300A 0R EN101361	Part R1300B 240R EN101382					
	Part U1102C:1 K4AAG165WB-MCRC EN102970		Part U1301A:1 H5AN4G6NAFR-UHC EN101655	Part U1301B:1 K4A4G165WE-BIRC EN101868	Part R1302A 0R EN101361	Part R1302B 240R EN101382					
			Part U1301A:2 MT40A256M16GE-083E EN101632								
			Part U1301C:1 K4AAG165WB-MCRC EN102970								

Assembly Variants

Assembly Variant	FPGA	DDR4PS	DDR4PL	TD_UZQ	TD	eMMC	Ethernet PHY	OSC27	OSC24
Variant EN102678:0 ME-XU9-4CG-1E-D11E-R2	Option EN102678:1 FPGA EN102158	Option EN102678:2 DDR4PS EN101868	Option EN102678:16 DDR4PL EN101868	Option EN102678:21 TD_UZQ EN101361	Option EN102678:22 TD DNE	Option EN102678:3 EMMC EN102591	Option EN102678:4 ETH EN101934	Option EN102678:5 OSC27 EN101608	Option EN102678:6 OSC24 EN104079
Variant EN102680:0 ME-XU9-5EV-1I-D12E-L11-R2	Option EN102680:1 FPGA EN102159	Option EN102680:2 DDR4PS EN101979	Option EN102680:16 DDR4PL EN101868	Option EN102680:21 TD_UZQ EN101361	Option EN102680:22 TD DNE	Option EN102680:3 EMMC EN102591	Option EN102680:4 ETH EN101934	Option EN102680:5 OSC27 EN101608	Option EN102680:6 OSC24 EN104079
Variant EN102682:0 ME-XU9-7EV-2I-D12E-L11-R2	Option EN102682:1 FPGA EN102160	Option EN102682:2 DDR4PS EN101979	Option EN102682:16 DDR4PL EN101868	Option EN102682:21 TD_UZQ EN101361	Option EN102682:22 TD DNE	Option EN102682:3 EMMC EN102591	Option EN102682:4 ETH EN101934	Option EN102682:5 OSC27 EN101608	Option EN102682:6 OSC24 EN104079
Variant EN103349:0 ME-XU9-7EV-2E-D13E-R2	Option EN103349:1 FPGA EN102160	Option EN103349:2 DDR4PS EN102970	Option EN103349:16 DDR4PL EN102970	Option EN103349:21 TD_UZQ EN101382	Option EN103349:22 TD	Option EN103349:3 EMMC EN102591	Option EN103349:4 ETH EN101934	Option EN103349:5 OSC27 EN101608	Option EN103349:6 OSC24 EN104079

Component Variants

OSC25	OSC33	OSC100	L0U68	L1U5	L2U2	L_VCC_INT	SEC_EEPROM	VCCINT_VCU	VCC_PSINT_0V9	VCC_INT_A	VCC_INT_B	LDO_0V85
Part Y1701A ASE-25.000MHZ-LC-T EN100287 Part Y1701B 831055678 EN104082	Part Y1700A DSC1001Cl2-033.3330 EN104103	Part Y300A ASDMB-100.000MHZ-LY- EN100284	Part L1802A 0.68uH EN102112 Part L1802B 0.68uH EN102445 Part L1900A 0.68uH EN102112 Part L1900B 0.68uH EN102445 Part L1901A 0.68uH EN102112 Part L1901B 0.68uH EN102445	Part L1800A 1u5 EN102613 Part L1800B 1u5 EN102207	Part L2000A 2u2 EN102185 Part L2000B 2u2 EN102208 Part L2000C 2u2 EN101680	Part L1801A 0u1 EN102190 Part L1801B 220n EN102189	Part U1605A ATSHA204A-MAHDA-T EN100827 Part U1605B DS28CN01U-A00+ EN100280	R604 or R607 C731, C736, C740, C743, C746, C749 or DNE	R1900, R1907 for 0.9V or R1901 for 0.85V	Part R1823A 10k EN101365 Part R1823B 47k EN101397	Part R1825A 4k7 EN101399 Part R1825B 100R EN101363	R2003, R2004, U2001 or R2001

Assembly Variants

OSC25	OSC33	OSC100	L0U68	L1U5	L2U2	L_VCC_INT	SEC_EEPROM	VCCINT_VCU	VCC_PSINT_0V9	VCC_INT_A	VCC_INT_B	LDO_0V85
Option EN102678:7 OSC25 EN100287	Option EN102678:8 OSC33 EN104103	Option EN102678:9 OSC100 EN100284	Option EN102678:10 L0U68 EN102112	Option EN102678:11 L1U5 EN102207	Option EN102678:12 L2U2 EN102185	Option EN102678:13 L_VCC_INT EN102190	Option EN102678:14 SEC_EEPROM EN100827	Option EN102678:15 VCC_INT_VCU DNE	Option EN102678:17 VCC_PSINT_0V9 DNE	Option EN102678:18 VCC_INT_A EN101365	Option EN102678:19 VCC_INT_B EN101399	Option EN102678:20 LDO_0V85 DNE
Option EN102680:7 OSC25 EN100287	Option EN102680:8 OSC33 EN104103	Option EN102680:9 OSC100 EN100284	Option EN102680:10 L0U68 EN102112	Option EN102680:11 L1U5 EN102207	Option EN102680:12 L2U2 EN102185	Option EN102680:13 L_VCC_INT EN102190	Option EN102680:14 SEC_EEPROM EN100827	Option EN102680:15 VCC_INT_VCU	Option EN102680:17 VCC_PSINT_0V9 DNE	Option EN102680:18 VCC_INT_A EN101365	Option EN102680:19 VCC_INT_B EN101399	Option EN102680:20 LDO_0V85 DNE
Option EN102682:7 OSC25 EN100287	Option EN102682:8 OSC33 EN104103	Option EN102682:9 OSC100 EN100284	Option EN102682:10 L0U68 EN102112	Option EN102682:11 L1U5 EN102207	Option EN102682:12 L2U2 EN102185	Option EN102682:13 L_VCC_INT EN102190	Option EN102682:14 SEC_EEPROM EN100827	Option EN102682:15 VCC_INT_VCU	Option EN102682:17 VCC_PSINT_0V9 DNE	Option EN102682:18 VCC_INT_A EN101365	Option EN102682:19 VCC_INT_B EN101399	Option EN102682:20 LDO_0V85 DNE
Option EN103349:7 OSC25 EN100287	Option EN103349:8 OSC33 EN104103	Option EN103349:9 OSC100 EN100284	Option EN103349:10 L0U68 EN102112	Option EN103349:11 L1U5 EN102207	Option EN103349:12 L2U2 EN102185	Option EN103349:13 L_VCC_INT EN102190	Option EN103349:14 SEC_EEPROM EN100827	Option EN103349:15 VCC_INT_VCU	Option EN103349:17 VCC_PSINT_0V9 DNE	Option EN103349:18 VCC_INT_A EN101365	Option EN103349:19 VCC_INT_B EN101399	Option EN103349:20 LDO_0V85 DNE