Enclustra User Schematics

Mercury ZX1 Revision 3.1

Disclaimer

User schematics do not include proprietary Enclustra design elements, such as power supply circuits.
These circuits use optimized designs which are extremely compact and remain proprietary to Enclustra.
The user manual provides all necessary information to use the module and its interfaces.

User schematics are provided after purchase of Enclustra hardware, and may also be provided in certain cases before purchase, to assist in product evaluation.
No part of the schematics may be copied or modified without written permission from Enclustra.

Full schematics, including a full bill-of-materials, may be available through the purchase of a hardware licence for the product in question.
Please contact Enclustra Sales for more information.

Note: DNE = Do Not Equip (parts not equipped by default)

© Enclustra GmbH

Mercury ZX1 SoC Module

Revision 3.1

Sheet 1: Cover
Sheet 2: FPGA Configuration
Sheet 3: FPGA Banks 12 / 13 / 33 / 34 / 35
Sheet 4: FPGA PS DDR / MIO
Sheet 5: FPGA MGT Banks / Decoupling
Sheet 6: FPGA Power
Sheet 7: Module Connectors
Sheet 8: PS DDR3L SDRAM
Sheet 9: Flash / Clock / Real-time Clock / Secure EEPROMs
Sheet 10: Dual Fast Ethernet PHYs
Sheet 11: Gigabit Ethernet PHY / USB 2.0 PHY
Sheet 12: PL DDR3L SDRAM
Sheet 13: Power 3.3V / 1.0V / 2.9V
Sheet 14: Power 1.5/1.35V / 1.2V / 1.55V
Sheet 15: Power 1.8V / 2.5V / 2.0V
Sheet 16: I2C Interface
Sheet 17: Mechanics
Sheet 18: Assembly Variants

FPGA Configuration

VCCO = VCC_CFG_MIO_B12

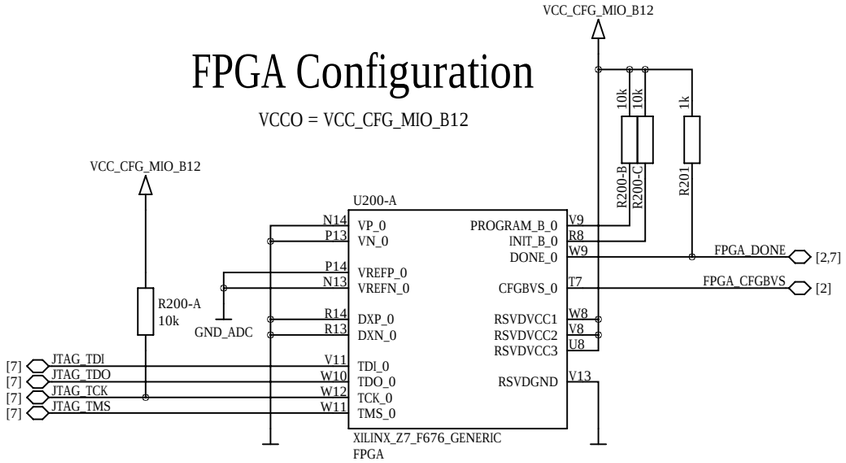

PS Boot Mode Straps

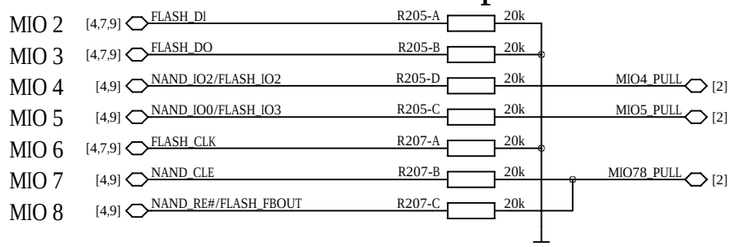

Boot Modes

	Boot Mode		Mode
	1	0	
	0	0	JTAG
	0	1	NAND
	1	0	QSPI
Default	1	1	SD Card

Reset Circuit

optional

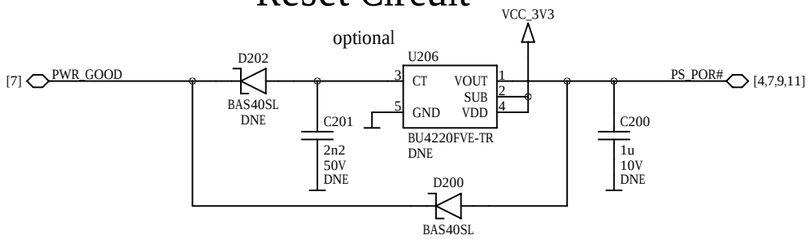

Series Resistors

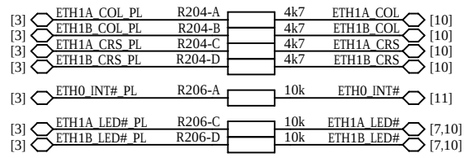

Boot Mode Select

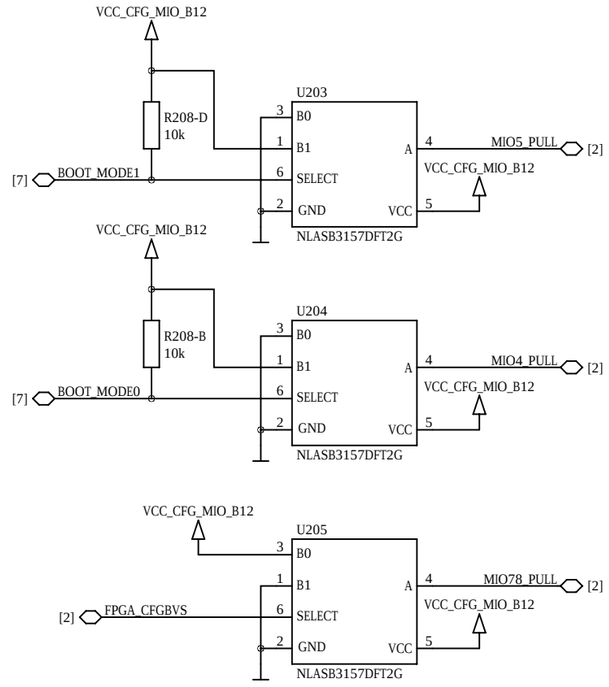

Configuration Voltage Detection

not included in user schematics

This part is intentionally left blank.

Pull-up During Configuration

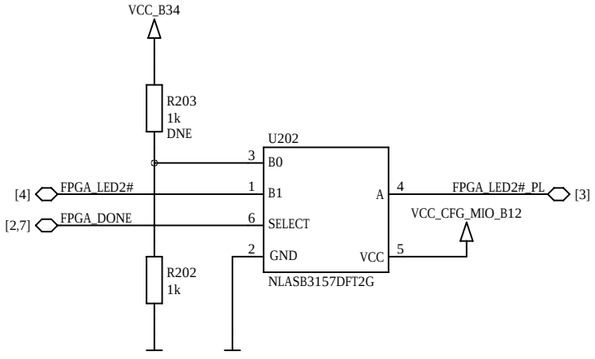

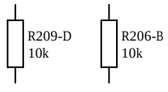

FPGA Bank 12

VCCO = VCC_CFG_MIO_B12

U200-B

[10]	ETH1_CLK	W14	IO_0_12	IO_L13P_T2_MRCC_12	AC14	ETH1B_RXCLK	[10]
[7]	IO_B12_L1_Y12_P	Y12	IO_L1P_T0_12	IO_L13N_T2_MRCC_12	AD14	ETH1_MDC	[10]
[7]	IO_B12_L1_Y11_N	Y11	IO_L1N_T0_12	IO_L14P_T2_SRCC_12	AB15	ETH1B_TXCLK	[10]
[10]	ETH1A_TXD0	AB12	IO_L2P_T0_12	IO_L14N_T2_SRCC_12	AB14	ETH1B_RXER	[10]
[10]	ETH1A_TXD1	AC11	IO_L2N_T0_12	IO_L15P_T2_DQS_12	AD16	ETH1B_TXD0	[10]
[7]	IO_B12_L3_Y10_P	Y10	IO_L3P_T0_DQS_12	IO_L15N_T2_DQS_12	AD15	ETH1B_RXD2	[10]
[7]	IO_B12_L3_AA10_N	AA10	IO_L3N_T0_DQS_12	IO_L16P_T2_12	AF15	ETH1B_RXD0	[10]
[10]	ETH1A_TXD2	AB11	IO_L4P_T0_12	IO_L16N_T2_12	AF14	ETH1_RESET#	[10]
[10]	ETH1A_TXD3	AB10	IO_L4N_T0_12	IO_L17P_T2_12	AE16	ETH1B_RXD3	[10]
[16]	I2C_SCL_LS	W13	IO_L5P_T0_12	IO_L17N_T2_12	AE15	ETH1B_RXD1	[10]
[16]	I2C_SDA_LS	Y13	IO_L5N_T0_12	IO_L18P_T2_12	AE17	ETH1B_TXD1	[10]
[4,7]	IO_MIO40_SDCLK_B12_AA13	AA13	IO_L6P_T0_12	IO_L18N_T2_12	AF17	ETH1B_TXEN	[10]
[4,7]	IO_MIO41_SDCMD_B12_AA12	AA12	IO_L6N_T0_VREF_12	IO_L19P_T3_12	Y17	ETH1B_TXD3	[10]
[10]	ETH1A_TXEN	AE10	IO_L7P_T1_12	IO_L19N_T3_VREF_12	AA17	ETH1B_TXD2	[10]
	DDR3_VSEL	AD10	IO_L7N_T1_12	IO_L20P_T3_12	AB17	IO_MIO42_SDD0_B12_AB17	[4,7]
[10]	ETH1A_RXD0	AE12	IO_L8P_T1_12	IO_L20N_T3_12	AB16	IO_MIO43_SDD1_B12_AB16	[4,7]
[10]	ETH1A_RXD1	AF12	IO_L8N_T1_12	IO_L21P_T3_DQS_12	AC17	IO_MIO44_SDD2_B12_AC17	[4,7]
[10]	ETH1A_RXD2	AE11	IO_L9P_T1_DQS_12	IO_L21N_T3_DQS_12	AC16	IO_MIO45_SDD3_B12_AC16	[4,7]
[10]	ETH1A_RXD3	AF10	IO_L9N_T1_DQS_12	IO_L22P_T3_12	AA15	IO_MIO46_UARTRX_B12_AA15	[4,7]
[10]	ETH1A_RXDV	AE13	IO_L10P_T1_12	IO_L22N_T3_12	AA14	IO_MIO47_UARTTX_B12_AA14	[4,7]
[10]	ETH1A_RXER	AF13	IO_L10N_T1_12	IO_L23P_T3_12	Y16	IO_MIO48_B12_Y16	[4,7]
[10]	ETH1A_TXCLK	AC12	IO_L11P_T1_SRCC_12	IO_L23N_T3_12	Y15	IO_MIO49_B12_Y15	[4,7]
[10]	ETH1_MDIO	AD11	IO_L11N_T1_SRCC_12	IO_L24P_T3_12	W16	IO_MIO50_B12_W16	[4,7]
[10]	ETH1A_RXCLK	AC13	IO_L12P_T1_MRCC_12	IO_L24N_T3_12	W15	IO_MIO51_B12_W15	[4,7]
[10]	ETH1B_RXDV	AD13	IO_L12N_T1_MRCC_12	IO_25_12	W17	ETH1_INT#_PWDN#	[10]

XILINX_Z7_F676_GENERIC
FPGA

FPGA Bank 13

VCCO = VCC_IO_B13

U200-C

[7]	IO_B13_0_V19	V19	IO_0_13	IO_L13P_T2_MRCC_13	AD20	IO_B13_L13_MRCC_AD20_P	[7]
[7]	IO_B13_L1_AA25_P	AA25	IO_L1P_T0_13	IO_L13N_T2_MRCC_13	AD21	IO_B13_L13_MRCC_AD21_N	[7]
[7]	IO_B13_L1_AB25_N	AB25	IO_L1N_T0_13	IO_L14P_T2_SRCC_13	AC21	IO_B13_L14_SRCC_AC21_P	[7]
[7]	IO_B13_L2_AB26_P	AB26	IO_L2P_T0_13	IO_L14N_T2_SRCC_13	AC22	IO_B13_L14_SRCC_AC22_N	[7]
[7]	IO_B13_L2_AC26_N	AC26	IO_L2N_T0_13	IO_L15P_T2_DQS_13	AF19	IO_B13_L15_AF19_P	[7]
[7]	IO_B13_L3_AE25_P	AE25	IO_L3P_T0_DQS_13	IO_L15N_T2_DQS_13	AF20	IO_B13_L15_AF20_N	[7]
[7]	IO_B13_L3_AE26_N	AE26	IO_L3N_T0_DQS_13	IO_L16P_T2_13	AE20	IO_B13_L16_AE20_P	[7]
[7]	IO_B13_L4_AD25_P	AD25	IO_L4P_T0_13	IO_L16N_T2_13	AE21	IO_B13_L16_AE21_N	[7]
[7]	IO_B13_L4_AD26_N	AD26	IO_L4N_T0_13	IO_L17P_T2_13	AD18	IO_B13_L17_AD18_P	[7]
[7]	IO_B13_L5_AF24_P	AF24	IO_L5P_T0_13	IO_L17N_T2_13	AD19	IO_B13_L17_AD19_N	[7]
[7]	IO_B13_L5_AF25_N	AF25	IO_L5N_T0_13	IO_L18P_T2_13	AE18	IO_B13_L18_AE18_P	[7]
[7]	IO_B13_L6_AA24_P	AA24	IO_L6P_T0_13	IO_L18N_T2_13	AF18	IO_B13_L18_AF18_N	[7]
[7]	IO_B13_L6_VREF_AB24_N	AB24	IO_L6N_T0_VREF_13	IO_L19P_T3_13	W20	IO_B13_L19_W20_P	[7]
[7]	IO_B13_L7_AE22_P	AE22	IO_L7P_T1_13	IO_L19N_T3_VREF_13	Y20	IO_B13_L19_VREF_Y20_N	[7]
[7]	IO_B13_L7_AF22_N	AF22	IO_L7N_T1_13	IO_L20P_T3_13	AA20	IO_B13_L20_AA20_P	[7]
[7]	IO_B13_L8_AE23_P	AE23	IO_L8P_T1_13	IO_L20N_T3_13	AB20	IO_B13_L20_AB20_N	[7]
[7]	IO_B13_L8_AF23_N	AF23	IO_L8N_T1_13	IO_L21P_T3_DQS_13	AC18	IO_B13_L21_AC18_P	[7]
[7]	IO_B13_L9_AB21_P	AB21	IO_L9P_T1_DQS_13	IO_L21N_T3_DQS_13	AC19	IO_B13_L21_AC19_N	[7]
[7]	IO_B13_L9_AB22_N	AB22	IO_L9N_T1_DQS_13	IO_L22P_T3_13	AA19	IO_B13_L22_AA19_P	[7]
[7]	IO_B13_L10_AA22_P	AA22	IO_L10P_T1_13	IO_L22N_T3_13	AB19	IO_B13_L22_AB19_N	[7]
[7]	IO_B13_L10_AA23_N	AA23	IO_L10N_T1_13	IO_L23P_T3_13	W18	IO_B13_L23_W18_P	[7]
[7]	IO_B13_L11_SRCC_AD23_P	AD23	IO_L11P_T1_SRCC_13	IO_L23N_T3_13	W19	IO_B13_L23_W19_N	[7]
[7]	IO_B13_L11_SRCC_AD24_N	AD24	IO_L11N_T1_SRCC_13	IO_L24P_T3_13	Y18	IO_B13_L24_Y18_P	[7]
[7]	IO_B13_L12_MRCC_AC23_P	AC23	IO_L12P_T1_MRCC_13	IO_L24N_T3_13	AA18	IO_B13_L24_AA18_N	[7]
[7]	IO_B13_L12_MRCC_AC24_N	AC24	IO_L12N_T1_MRCC_13	IO_25_13	V18	IO_B13_25_V18	[7]

XILINX_Z7_F676_GENERIC
FPGA

FPGA Bank 33

VCCO = VCC_IO_B33 (1.8V only)

U200-D

R300 100R

[3]	FPGA_B33_VRN	L9	IO_0_VRN_33	IO_L13P_T2_MRCC_33	M6	IO_B33_L13_MRCC_M6_P	[7]
[7]	IO_B33_L1_G4_P	G4	IO_L1P_T0_33	IO_L13N_T2_MRCC_33	M5	IO_B33_L13_MRCC_M5_N	[7]
[7]	IO_B33_L1_F4_N	F4	IO_L1N_T0_33	IO_L14P_T2_SRCC_33	L5	CLK200_P	[9]
[7]	IO_B33_L2_D4_P	D4	IO_L2P_T0_33	IO_L14N_T2_SRCC_33	L4	CLK200_N	[9]
[7]	IO_B33_L2_D3_N	D3	IO_L2N_T0_33	IO_L15P_T2_DQS_33	N3	IO_B33_L15_N3_P	[7]
[7]	IO_B33_L3_G2_P	G2	IO_L3P_T0_DQS_33	IO_L15N_T2_DQS_33	N2	IO_B33_L15_N2_N	[7]
[7]	IO_B33_L3_F2_N	F2	IO_L3N_T0_DQS_33	IO_L16P_T2_33	M2	IO_B33_L16_M2_P	[7]
[7]	IO_B33_L4_D1_P	D1	IO_L4P_T0_33	IO_L16N_T2_33	L2	IO_B33_L16_L2_N	[7]
[7]	IO_B33_L4_C1_N	C1	IO_L4N_T0_33	IO_L17P_T2_33	N4	IO_B33_L17_N4_P	[7]
[7]	IO_B33_L5_E2_P	E2	IO_L5P_T0_33	IO_L17N_T2_33	M4	IO_B33_L17_M4_N	[7]
[7]	IO_B33_L5_E1_N	E1	IO_L5N_T0_33	IO_L18P_T2_33	N1	IO_B33_L18_N1_P	[7]
[7]	IO_B33_L6_F3_P	F3	IO_L6P_T0_33	IO_L18N_T2_33	M1	IO_B33_L18_M1_N	[7]
[5,7]	IO_B33_L6_VREF_E3_N	E3	IO_L6N_T0_VREF_33	IO_L19P_T3_33	M7	IO_B33_L19_M7_P	[5]
[7]	IO_B33_L7_J1_P	J1	IO_L7P_T1_33	IO_L19N_T3_VREF_33	L7	IO_B33_L19_VREF_L7_N	[5]
[7]	IO_B33_L7_H1_N	H1	IO_L7N_T1_33	IO_L20P_T3_33	K5	IO_B33_L20_K5_P	[7]
[7]	IO_B33_L8_H4_P	H4	IO_L8P_T1_33	IO_L20N_T3_33	J5	IO_B33_L20_J5_N	[7]
[7]	IO_B33_L8_H3_N	H3	IO_L8N_T1_33	IO_L21P_T3_DQS_33	M8	IO_B33_L21_M8_P	[5]
[7]	IO_B33_L9_K2_P	K2	IO_L9P_T1_DQS_33	IO_L21N_T3_DQS_33	L8	IO_B33_L21_L8_N	[5]
[7]	IO_B33_L9_K1_N	K1	IO_L9N_T1_DQS_33	IO_L22P_T3_33	K6	IO_B33_L22_K6_P	[5]
[7]	IO_B33_L10_H2_P	H2	IO_L10P_T1_33	IO_L22N_T3_33	J6	IO_B33_L22_J6_N	[5]
[7]	IO_B33_L10_G1_N	G1	IO_L10N_T1_33	IO_L23P_T3_33	N7	IO_B33_L23_N7_P	[5]
[7]	IO_B33_L11_SRCC_L3_P	L3	IO_L11P_T1_SRCC_33	IO_L23N_T3_33	N6	IO_B33_L23_N6_N	[5]
[7]	IO_B33_L11_SRCC_K3_N	K3	IO_L11N_T1_SRCC_33	IO_L24P_T3_33	K8	IO_B33_L24_K8_P	[5]
[7]	IO_B33_L12_MRCC_J4_P	J4	IO_L12P_T1_MRCC_33	IO_L24N_T3_33	K7	IO_B33_L24_K7_N	[5]
[7]	IO_B33_L12_MRCC_J3_N	J3	IO_L12N_T1_MRCC_33	IO_25_VRP_33	N8	FPGA_B33_VRP	[3]

XILINX_Z7_F676_GENERIC
FPGA

FPGA Bank 34

VCCO = VCC_IO_B34 (1.8V only)

U200-E

[2]	ETH0_INT#_PL	K11	IO_0_VRN_34	IO_L13P_T2_MRCC_34	C8	IO_B34_L13_MRCC_C8_P	[7]
[2]	ETH1A_COL_PL	J11	IO_L1P_T0_34	IO_L13N_T2_MRCC_34	C7	IO_B34_L13_MRCC_C7_N	[7]
[2]	ETH1B_COL_PL	H11	IO_L1N_T0_34	IO_L14P_T2_SRCC_34	D6	IO_B34_L14_SRCC_D6_P	[7]
[2]	ETH1A_CRS_PL	G6	IO_L2P_T0_34	IO_L14N_T2_SRCC_34	C6	IO_B34_L14_SRCC_C6_N	[7]
[2]	ETH1B_CRS_PL	G5	IO_L2N_T0_34	IO_L15P_T2_DQS_34	C9	IO_B34_L15_C9_P	[7]
[2]	FPGA_LED2#_PL	H9	IO_L3P_T0_DQS_PUDC_B_34	IO_L15N_T2_DQS_34	B9	IO_B34_L15_B9_N	[7]
[12]	DDR3PL_RESET#_PL	G9	IO_L3N_T0_DQS_34	IO_L16P_T2_34	B10	IO_B34_L16_B10_P	[7]
[4]	FPGA_LED0#	H7	IO_L4P_T0_34	IO_L16N_T2_34	A10	IO_B34_L16_A10_N	[7]
[4]	FPGA_LED1#	H6	IO_L4N_T0_34	IO_L17P_T2_34	A9	IO_B34_L17_A9_P	[7]
[2]	ETH1A_LED#_PL	J10	IO_L5P_T0_34	IO_L17N_T2_34	A8	IO_B34_L17_A8_N	[7]
[2]	ETH1B_LED#_PL	J9	IO_L5N_T0_34	IO_L18P_T2_34	B7	IO_B34_L18_B7_P	[7]
[2]	IO_B34_L6_J8_P	J8	IO_L6P_T0_34	IO_L18N_T2_34	A7	IO_B34_L18_A7_N	[7]
[5]	IO_B34_L6_VREF_H8_N	H8	IO_L6N_T0_VREF_34	IO_L19P_T3_34	C4	IO_B34_L19_C4_P	[7]
[5]	IO_B34_L7_F5_P	F5	IO_L7P_T1_34	IO_L19N_T3_VREF_34	C3	IO_B34_L19_VREF_C3_N	[5,7]
[7]	IO_B34_L7_E5_N	E5	IO_L7N_T1_34	IO_L20P_T3_34	B5	IO_B34_L20_B5_P	[7]
[7]	IO_B34_L8_D9_P	D9	IO_L8P_T1_34	IO_L20N_T3_34	B4	IO_B34_L20_B4_N	[7]
[7]	IO_B34_L8_D8_N	D8	IO_L8N_T1_34	IO_L21P_T3_DQS_34	B6	IO_B34_L21_B6_P	[7]
[7]	IO_B34_L9_F9_P	F9	IO_L9P_T1_DQS_34	IO_L21N_T3_DQS_34	A5	IO_B34_L21_A5_N	[7]
[7]	IO_B34_L9_E8_N	E8	IO_L9N_T1_DQS_34	IO_L22P_T3_34	A4	IO_B34_L22_A4_P	[7]
[7]	IO_B34_L10_E6_P	E6	IO_L10P_T1_34	IO_L22N_T3_34	A3	IO_B34_L22_A3_N	[7]
[7]	IO_B34_L10_D5_N	D5	IO_L10N_T1_34	IO_L23P_T3_34	C2	IO_B34_L23_C2_P	[7]
[7]	IO_B34_L11_SRCC_F8_P	F8	IO_L11P_T1_SRCC_34	IO_L23N_T3_34	B1	IO_B34_L23_B1_N	[7]
[7]	IO_B34_L11_SRCC_E7_N	E7	IO_L11N_T1_SRCC_34	IO_L24P_T3_34	B2	IO_B34_L24_B2_P	[7]
[7]	IO_B34_L12_MRCC_G7_P	G7	IO_L12P_T1_MRCC_34	IO_L24N_T3_34	A2	IO_B34_L24_A2_N	[7]
[7]	IO_B34_L12_MRCC_F7_N	F7	IO_L12N_T1_MRCC_34	IO_25_VRP_34	K10	I2C_INT#_PL	[16]

XILINX_Z7_F676_GENERIC
FPGA

FPGA Bank 35

VCCO = VCC_DDR3

U200-F

[12]	DDR3PL_VRN	H16	IO_0_VRN_35	IO_L13P_T2_MRCC_35	D15	DDR3PL_CKE	[12]
[12]	DDR3PL_DQ12	F12	IO_L1P_T0_AD0P_35	IO_L13N_T2_MRCC_35	D14	DDR3PL_A13	[12]
[12]	DDR3PL_DQ10	E12	IO_L1N_T0_AD0N_35	IO_L14P_T2_AD4P_SRCC_35	F15	DDR3PL_CK_P	[12]
[12]	DDR3PL_DQ13	E10	IO_L2P_T0_AD8P_35	IO_L14N_T2_AD4N_SRCC_35	E15	DDR3PL_CK_N	[12]
[12]	DDR3PL_DQ8	D10	IO_L2N_T0_AD8N_35	IO_L15P_T2_DQS_AD12P_35	C17	DDR3PL_A6	[12]
[12]	DDR3PL_DQS1_P	G10	IO_L3P_T0_DQS_AD1P_35	IO_L15N_T2_DQS_AD12N_35	C16	DDR3PL_A11	[12]
[12]	DDR3PL_DQS1_N	F10	IO_L3N_T0_DQS_AD1N_35	IO_L16P_T2_35	E16	DDR3PL_A12	[12]
[12]	DDR3PL_DQ9	E11	IO_L4P_T0_35	IO_L16N_T2_35	D16	DDR3PL_BA1	[12]
[12]	DDR3PL_DQ14	D11	IO_L4N_T0_35	IO_L17P_T2_AD5P_35	B16	DDR3PL_A1	[12]
[12]	DDR3PL_DQ15	G12	IO_L5P_T0_AD9P_35	IO_L17N_T2_AD5N_35	B15	DDR3PL_A10	[12]
[12]	DDR3PL_DQ11	G11	IO_L5N_T0_AD9N_35	IO_L18P_T2_AD13P_35	B17	DDR3PL_A8	[12]
[12]	DDR3PL_DM1	F13	IO_L6P_T0_35	IO_L18N_T2_AD13N_35	A17	DDR3PL_A4	[12]
[3,12]	VREF_DDR3PL	E13	IO_L6N_T0_VREF_35	IO_L19P_T3_35	D13	DDR3PL_DQ5	[12]
[12]	DDR3PL_RAS#	H13	IO_L7P_T1_AD2P_35	IO_L19N_T3_VREF_35	C13	VREF_DDR3PL	[3,12]
[12]	DDR3PL_CAS#	H12	IO_L7N_T1_AD2N_35	IO_L20P_T3_AD6P_35	C14	DDR3PL_DQ4	[12]
[12]	DDR3PL_WE#	K13	IO_L8P_T1_AD10P_35	IO_L20N_T3_AD6N_35	B14	DDR3PL_DQ6	[12]
[12]	DDR3PL_ODT	J13	IO_L8N_T1_AD10N_35	IO_L21P_T3_DQS_AD14P_35	A15	DDR3PL_DQS0_P	[12]
[12]	DDR3PL_A0	K15	IO_L9P_T1_DQS_AD3P_35	IO_L21N_T3_DQS_AD14N_35	A14	DDR3PL_DQS0_N	[12]
[12]	DDR3PL_A2	J15	IO_L9N_T1_DQS_AD3N_35	IO_L22P_T3_AD7P_35	C12	DDR3PL_DQ3	[12]
[12]	DDR3PL_A7	G16	IO_L10P_T1_AD11P_35	IO_L22N_T3_AD7N_35	B12	DDR3PL_DQ2	[12]
[12]	DDR3PL_A5	G15	IO_L10N_T1_AD11N_35	IO_L23P_T3_35	C11	DDR3PL_DQ1	[12]
[12]	DDR3PL_A3	G14	IO_L11P_T1_SRCC_35	IO_L23N_T3_35	B11	DDR3PL_DQ0	[12]
[12]	DDR3PL_A9	F14	IO_L11N_T1_SRCC_35	IO_L24P_T3_AD15P_35	A13	DDR3PL_DQ7	[12]
[12]	DDR3PL_BA0	J14	IO_L12P_T1_MRCC_35	IO_L24N_T3_AD15N_35	A12	DDR3PL_DM0	[12]
[12]	DDR3PL_BA2	H14	IO_L12N_T1_MRCC_35	IO_25_VRP_35	K12	DDR3PL_VRP	[12]

XILINX_Z7_F676_GENERIC
FPGA

FPGA Bank 33 DCI Resistors

VCC_B33

[3]	FPGA_B33_VRN	R301	100R
[3]	FPGA_B33_VRP	R302	100R

PS DDR

VCCO = VCC_DDR3

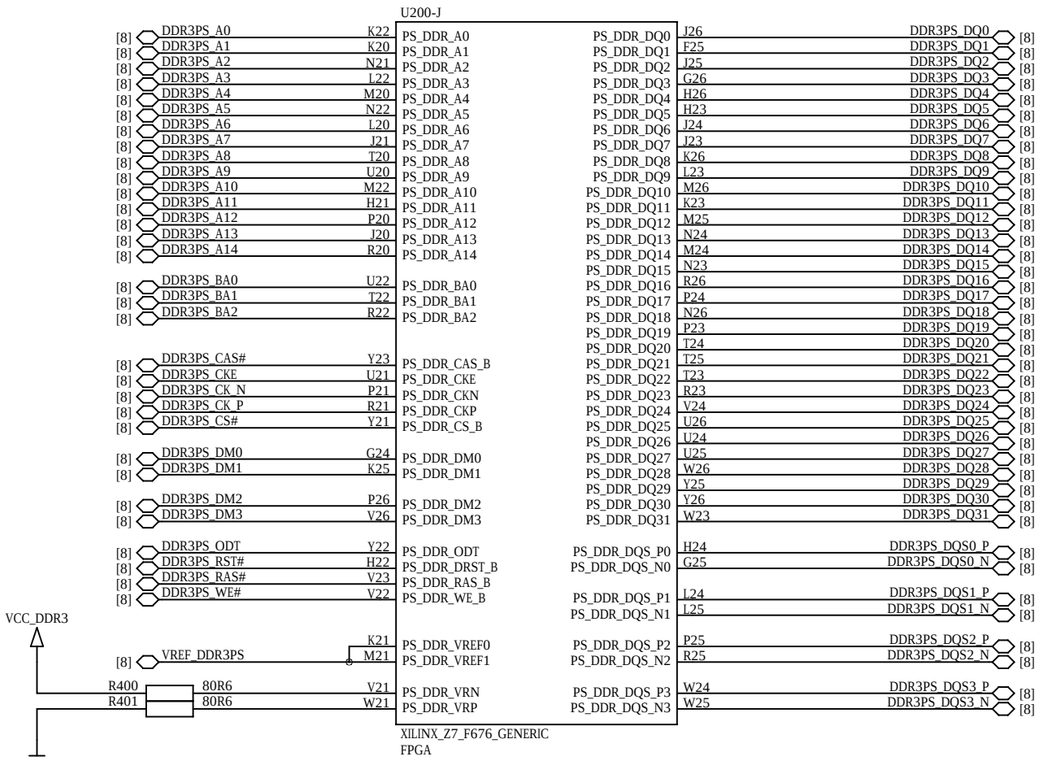

PS MIO

VCCO = VCC_CFG_MIO_B12

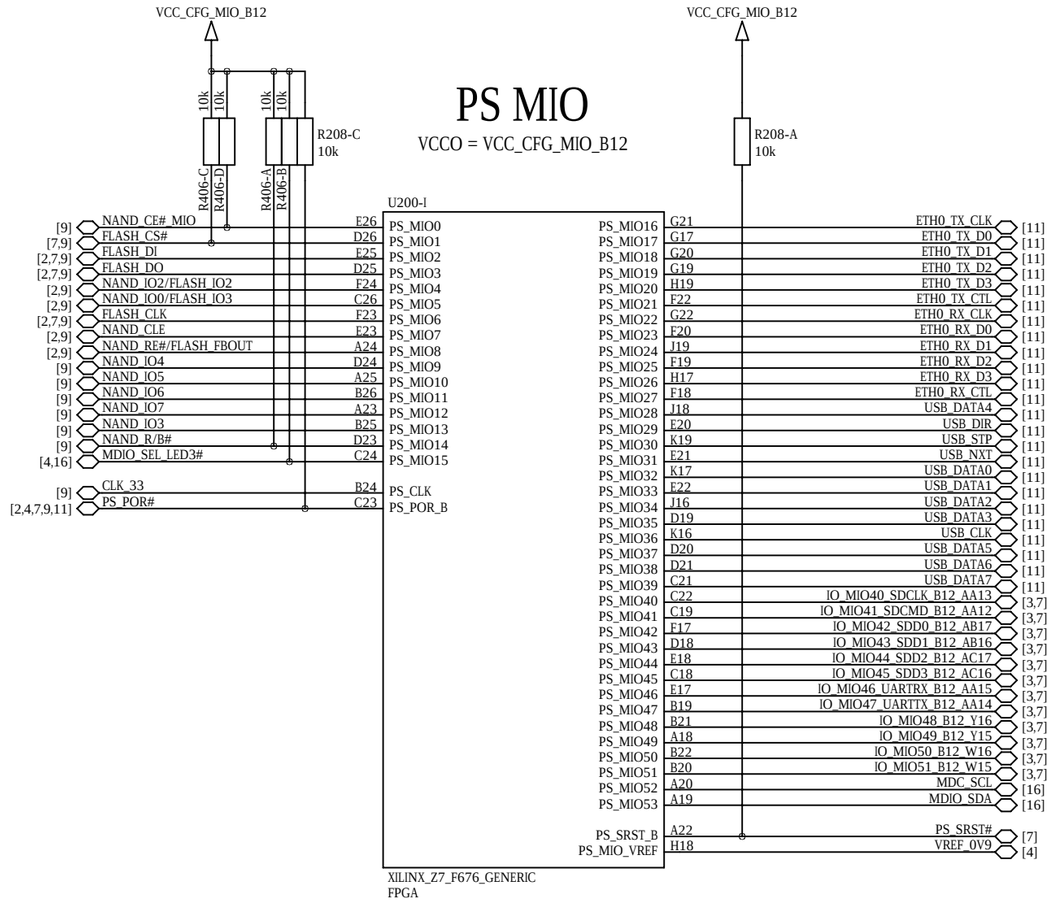

User LEDs

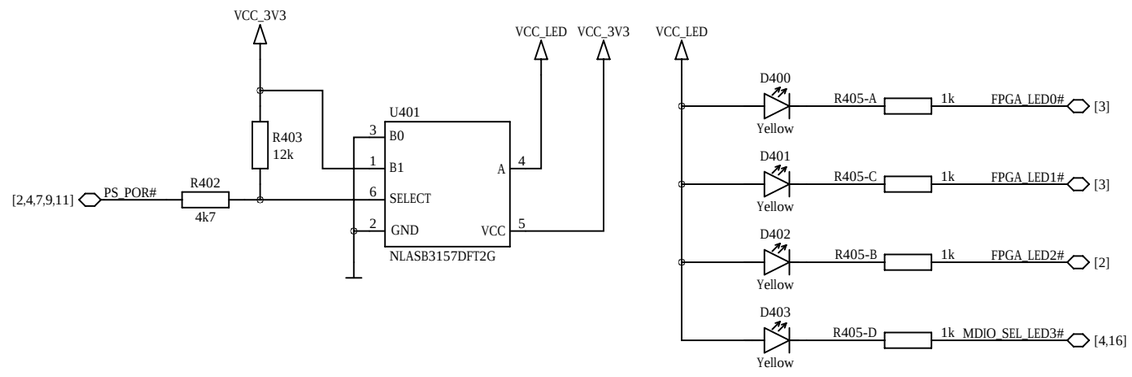

PS VREF Generation

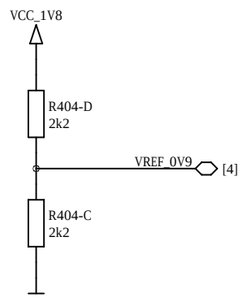

ENCLUSTRA	Copyright © 2020 by Enclustra GmbH	Sheet Name 4_FPGA_PS_DDR/PS_MIO	Customer No 0000	Revision R3.1	DNE = do not equip	Confidential	
	Company Enclustra GmbH	Project Mercury ZX1	Project No 438	Designed MHEI	Date 4 Mar 2020	Sheet/sheets 4 / 18	

FPGA MGT Bank 111

not available in the XC7Z030 device

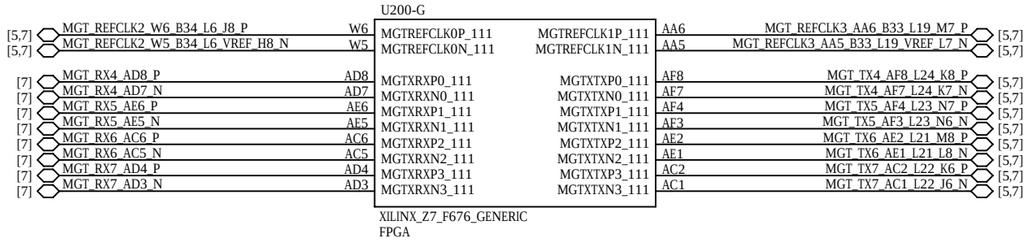

FPGA MGT Bank 112

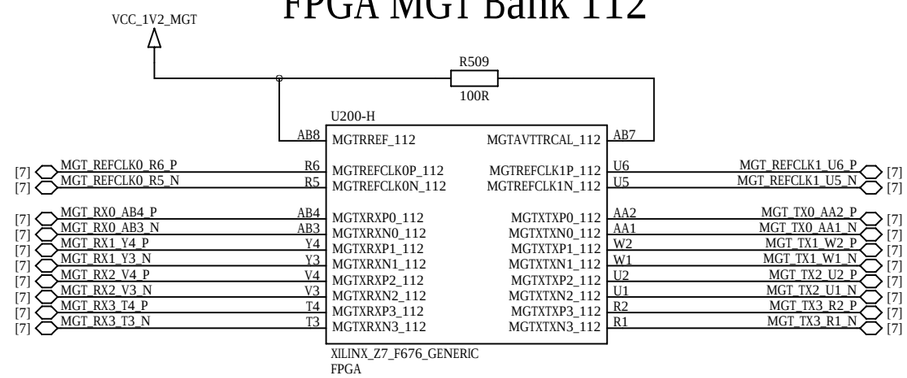

FPGA MGT Pin Rerouting

equipped only for the XC7Z030 device

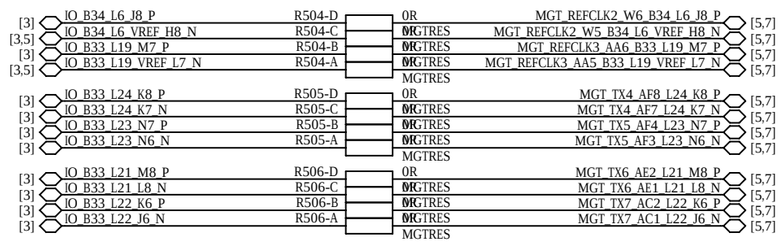

FPGA Decoupling

not included in user schematics

This part is intentionally left blank.

FPGA Battery Voltage

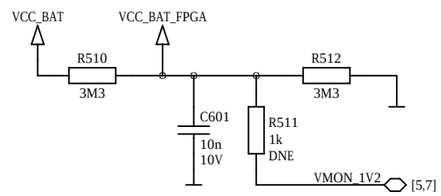

FPGA Bank 33/34 VREF Filter

not equipped for the XC7Z030 device

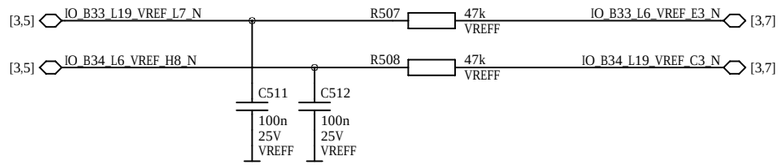

Power Decoupling

not included in user schematics

This part is intentionally left blank.

Voltage Monitoring

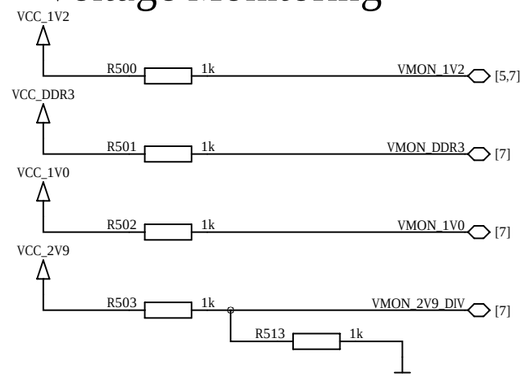

ENCLUSTRA	Copyright © 2020 by Enclustra GmbH	Sheet Name 5_FPGA_MGT_DECOUPLING	Customer No 0000	Revision R3.1	DNE = do not equip	Confidential	
	Company Enclustra GmbH	Project Mercury ZX1	Project No 438	Designed MHEI	Date 4 Mar 2020	Sheet/sheets 5 / 18	

FPGA Power

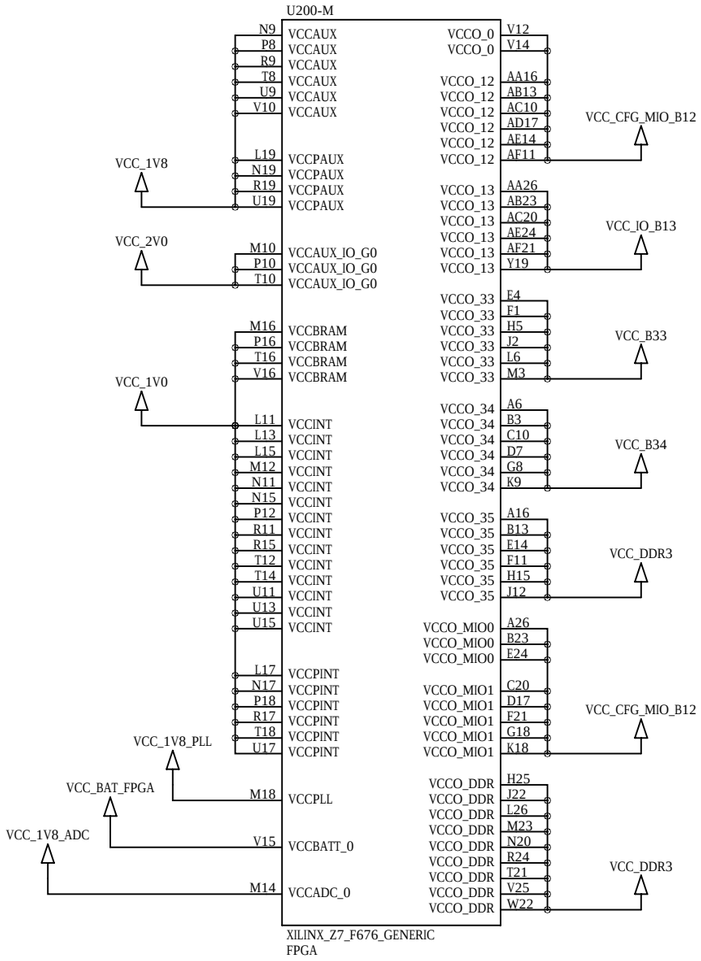

FPGA MGT Power

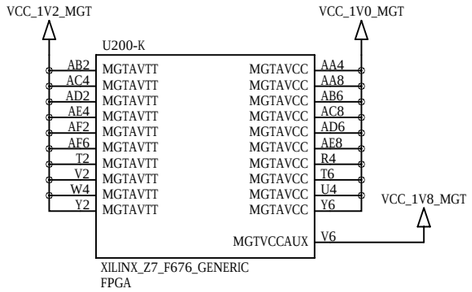

MGT Power Filter and Decoupling

not included in user schematics

This part is intentionally left blank.

FPGA Ground

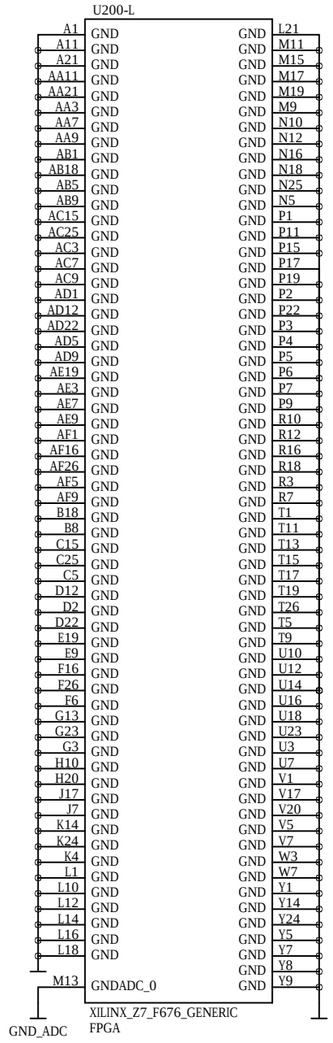

FPGA ADC Supply Filter

not included in user schematics

This part is intentionally left blank.

PS PLL Power Filter

not included in user schematics

This part is intentionally left blank.

ENCLUSTRA	Copyright	© 2020 by Enclustra GmbH	Sheet Name	6_FPGA_POWER	Customer No 0000	Revision R3.1	DNE = do not equip	Confidential
	Company	Enclustra GmbH	Project	Mercury ZX1	Project No 438	Designed MHEI	Date 4 Mar 2020	Sheet/sheets 6 / 18

Module Connector A

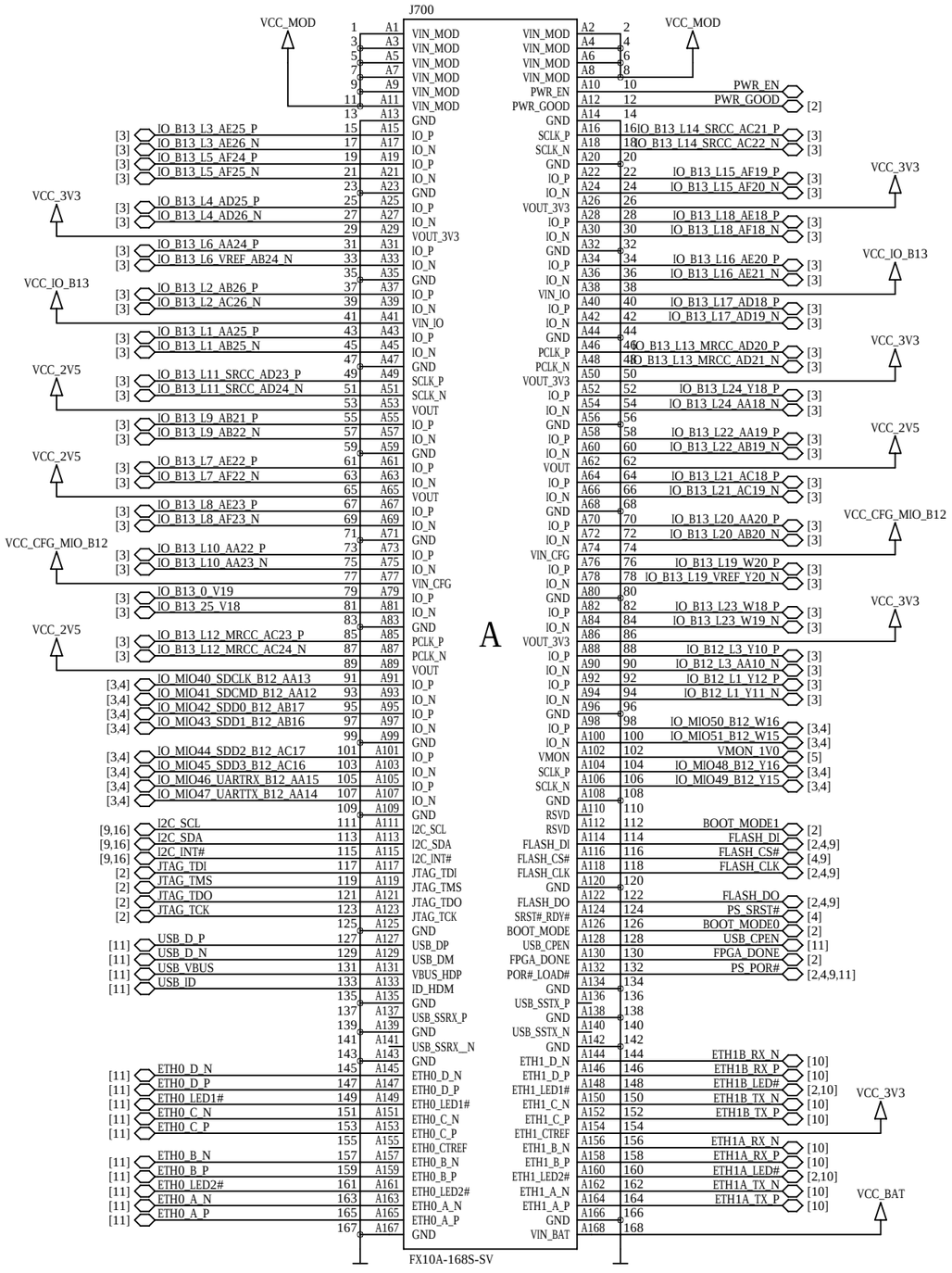

Module Connector B

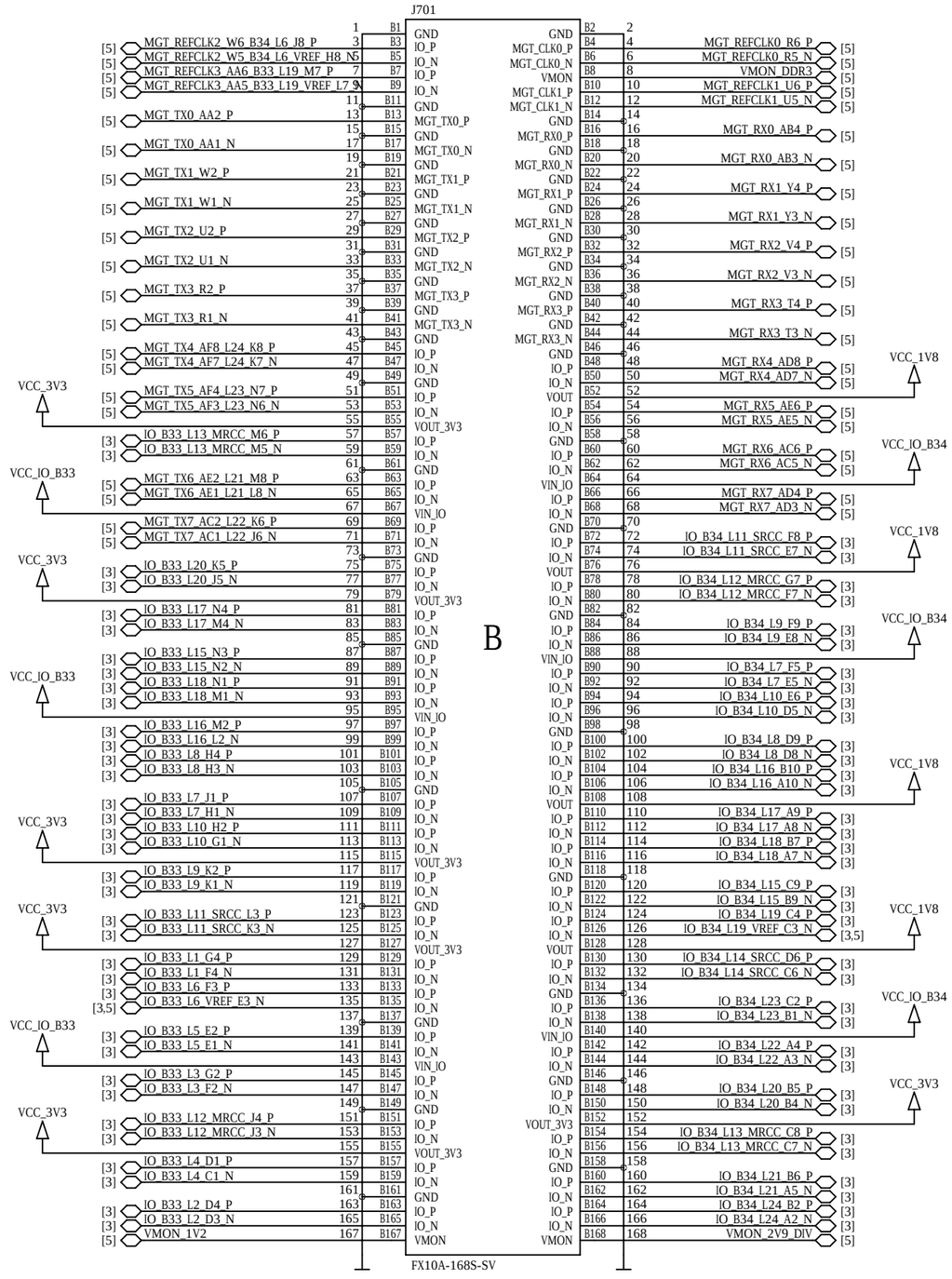

ENCLUSTRA	Copyright © 2020 by Enclustra GmbH	Sheet Name 7_MODULE_CONNECTORS	Customer No 0000	Revision R3.1	DNE = do not equip	Confidential	
	Company Enclustra GmbH	Project Mercury ZX1	Project No 438	Designed MHEI	Date 4 Mar 2020	Sheet/sheets 7 / 18	

PS DDR3L SDRAM Bytes 0/2

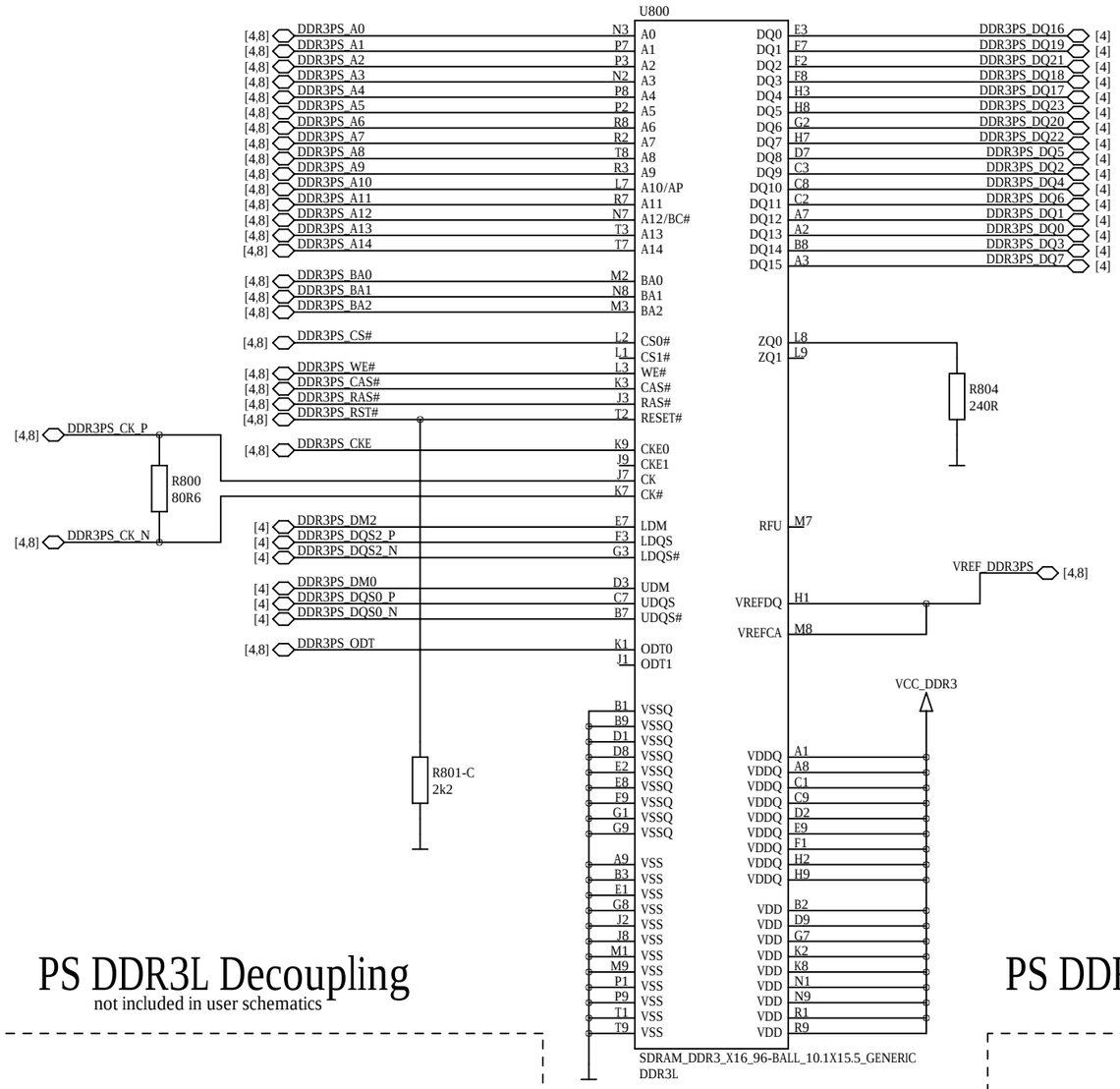

PS DDR3L SDRAM Bytes 1/3

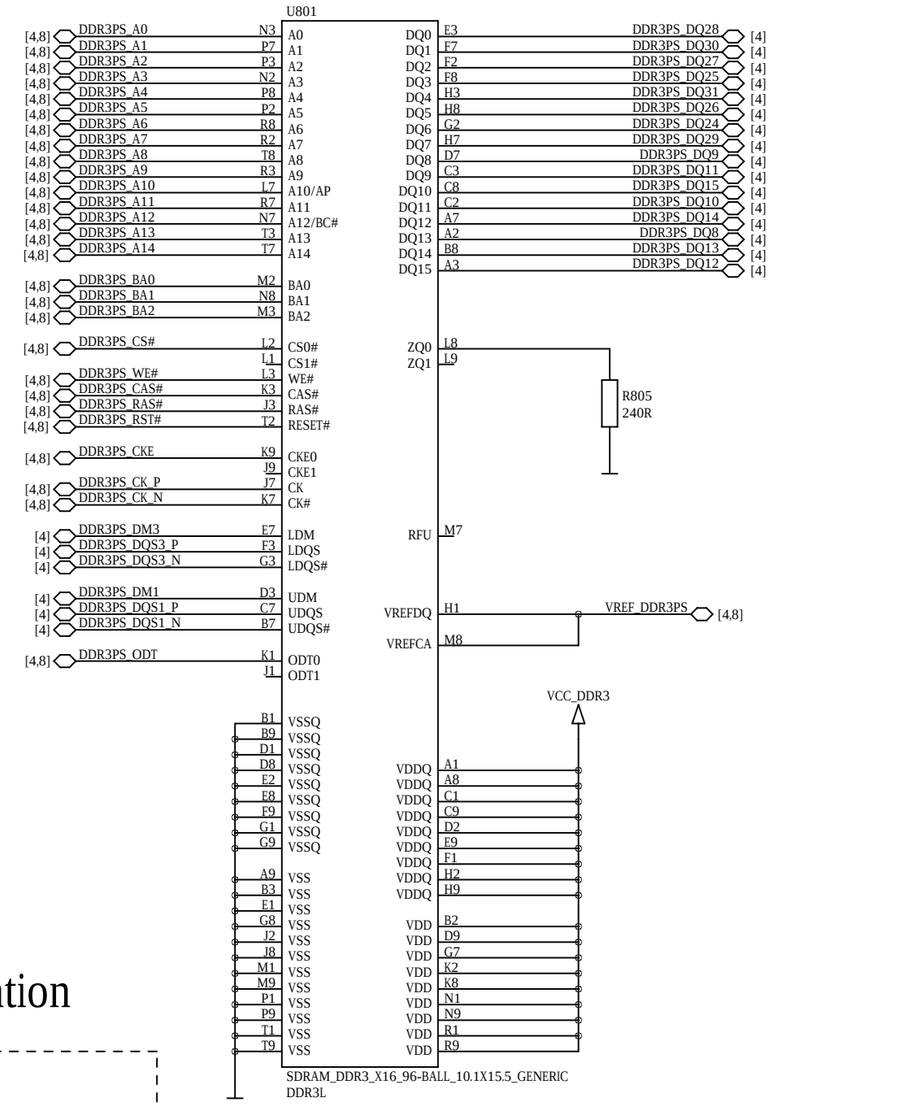

PS DDR3L Decoupling

not included in user schematics

This part is intentionally left blank.

PS DDR3L VREF Generation

not included in user schematics

This part is intentionally left blank.

R801-D
2k2

ENCLUSTRA	Copyright © 2020 by Enclustra GmbH	Sheet Name 8_PS_DDR3L_SDRAM	Customer No 0000	Revision R3.1	DNE = do not equip	Confidential	
	Company Enclustra GmbH	Project Mercury ZX1	Project No 438	Designed MHEI	Date 4 Mar 2020	Sheet/sheets 8 / 18	

Quad SPI Flash

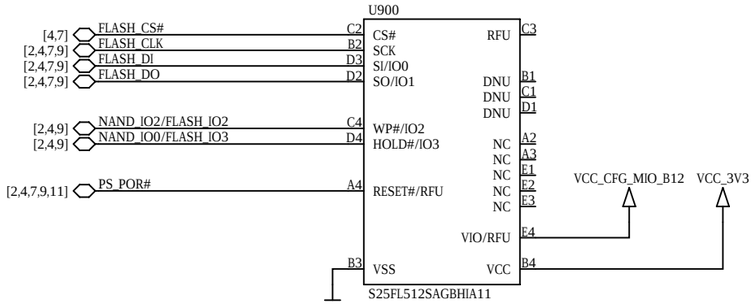

PS Oscillator

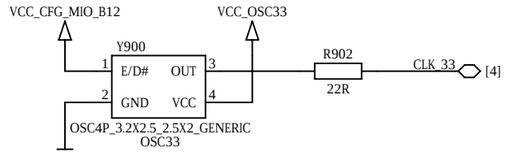

Secure EEPROMs

for Enclustra use only

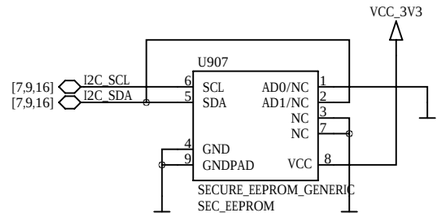

ATSHA204A-MAHDA-T I2C Address: 1 1 0 0 1 0 0 Rw
DS28CN01U-A00+ I2C Address: 1 0 1 1 1 0 0 Rw

NAND Flash

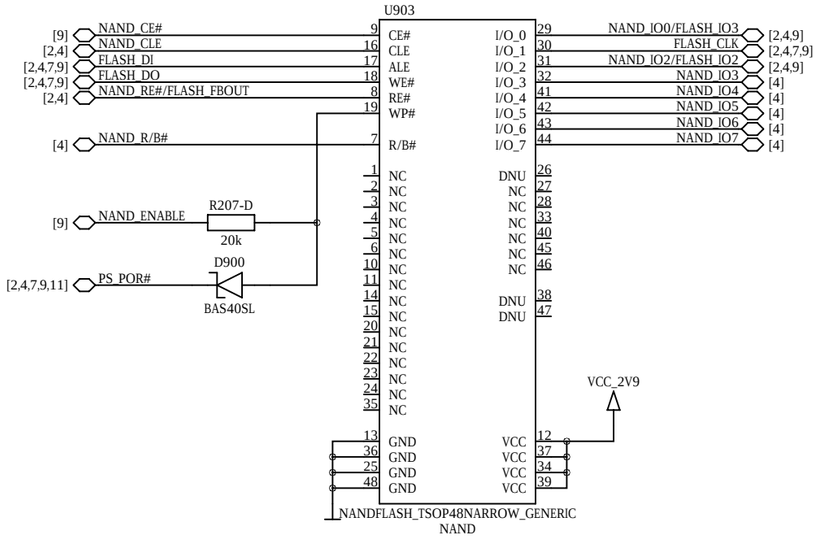

PL Oscillator

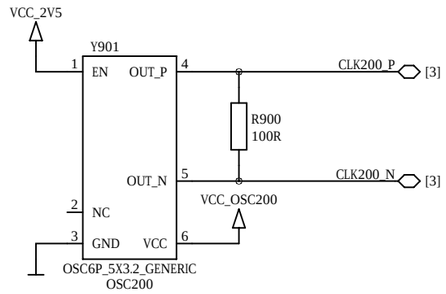

NAND Flash Enable

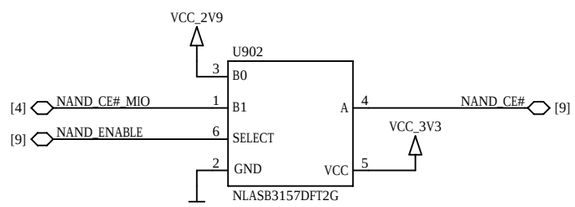

Real-time Clock

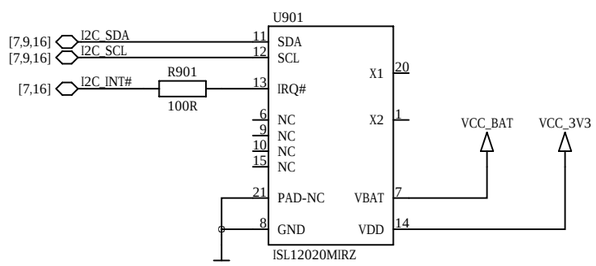

I2C Addresses
RTC registers: 1 1 0 1 1 1 1 Rw
User SRAM: 1 0 1 0 1 1 1 Rw

Oscillator Power Filters

not included in user schematics

This part is intentionally left blank.

ENCLUSTRA	Copyright	© 2020 by Enclustra GmbH	Sheet Name	9_FLASH_CLOCK_RTC_EEPROM	Customer No	0000	Revision	R3.1	DNE = do not equip	Confidential
	Company	Enclustra GmbH	Project	Mercury ZX1	Project No	438	Designed	MHEI	Date 4 Mar 2020	Sheet/sheets 9 / 18

Fast Ethernet PHY A

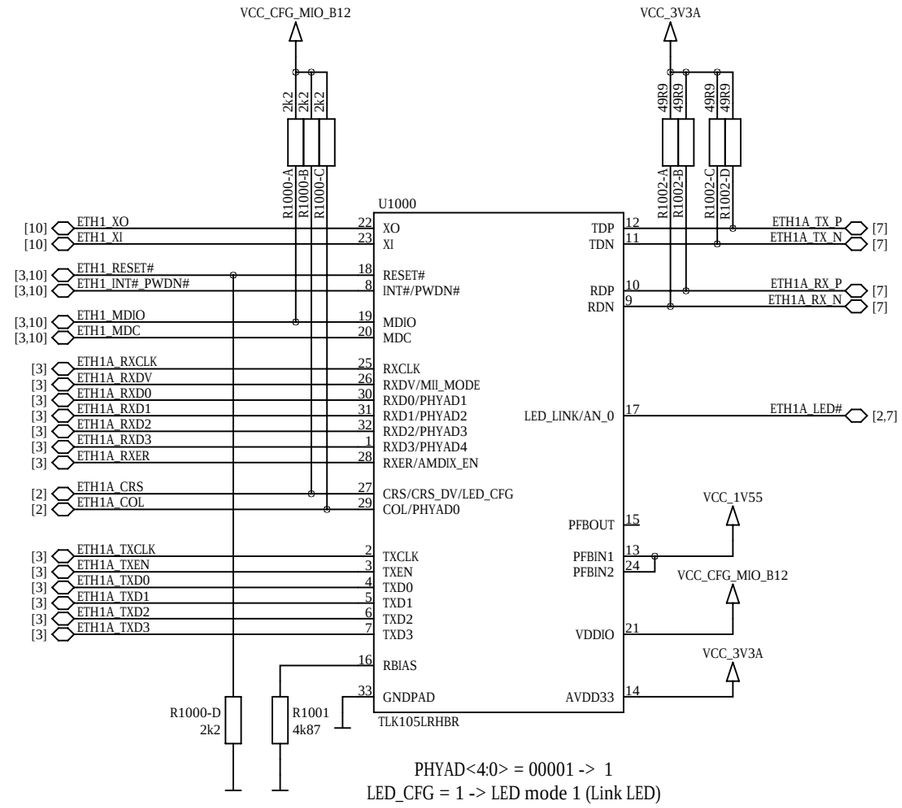

PHYAD<4:0> = 00001 -> 1
LED_CFG = 1 -> LED mode 1 (Link LED)
AMDIX_EN = 1 -> Auto MDI-X enabled
AN_0 = 1 -> auto-negotiation enabled
MII_MODE = 0 -> MII mode

Fast Ethernet PHY B

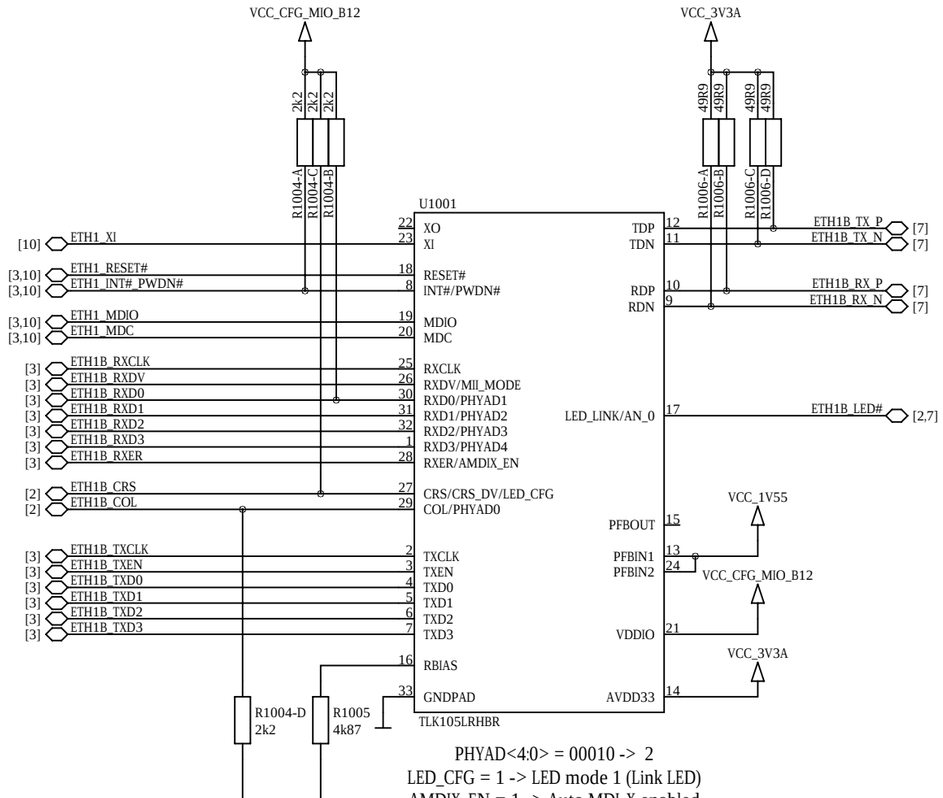

PHYAD<4:0> = 00010 -> 2
LED_CFG = 1 -> LED mode 1 (Link LED)
AMDIX_EN = 1 -> Auto MDI-X enabled
AN_0 = 1 -> auto-negotiation enabled
MII_MODE = 0 -> MII mode

Fast Ethernet Clock

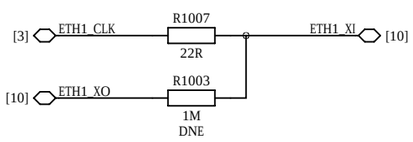

Fast Ethernet Decoupling

not included in user schematics

This part is intentionally left blank.

Fast Ethernet Decoupling Power Filter

not included in user schematics

This part is intentionally left blank.

Gigabit Ethernet PHY

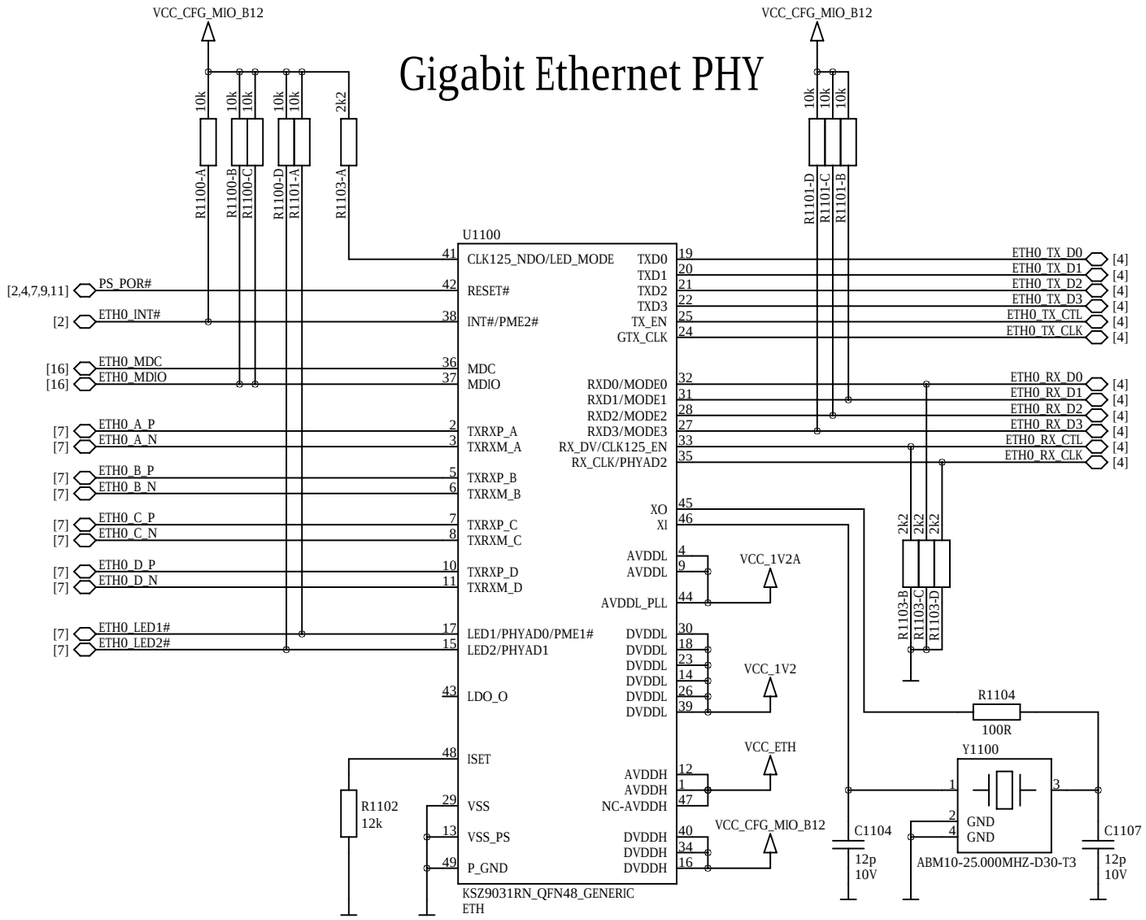

MODE<3:0> = 1110 -> RGMII, all capabilities
LED_Mode Pull up = Single LED
PhyAddress <2:0> = 011 -> 3
LED1 and LED2 are active low

USB 2.0 PHY

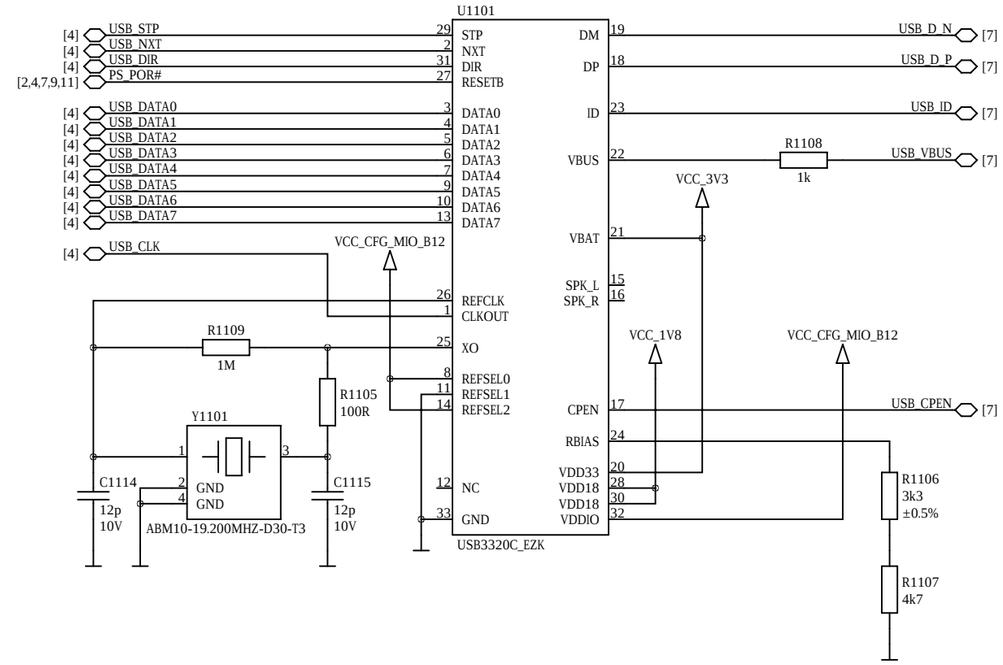

Ethernet Supply Filter

not included in user schematics

This part is intentionally left blank.

Gigabit Ethernet Power

not included in user schematics

This part is intentionally left blank.

USB 2.0 Decoupling

not included in user schematics

This part is intentionally left blank.

ENCLUSTRA	Copyright	© 2020 by Enclustra GmbH	Sheet Name	11_GIGABIT_ETHERNET_USB_PHY	Customer No	0000	Revision	R3.1	DNE = do not equip	Confidential
	Company	Enclustra GmbH	Project	Mercury ZX1	Project No	438	Designed	MHEI	Date 4 Mar 2020	Sheet/sheets 11 / 18

PL DDR3L SDRAM

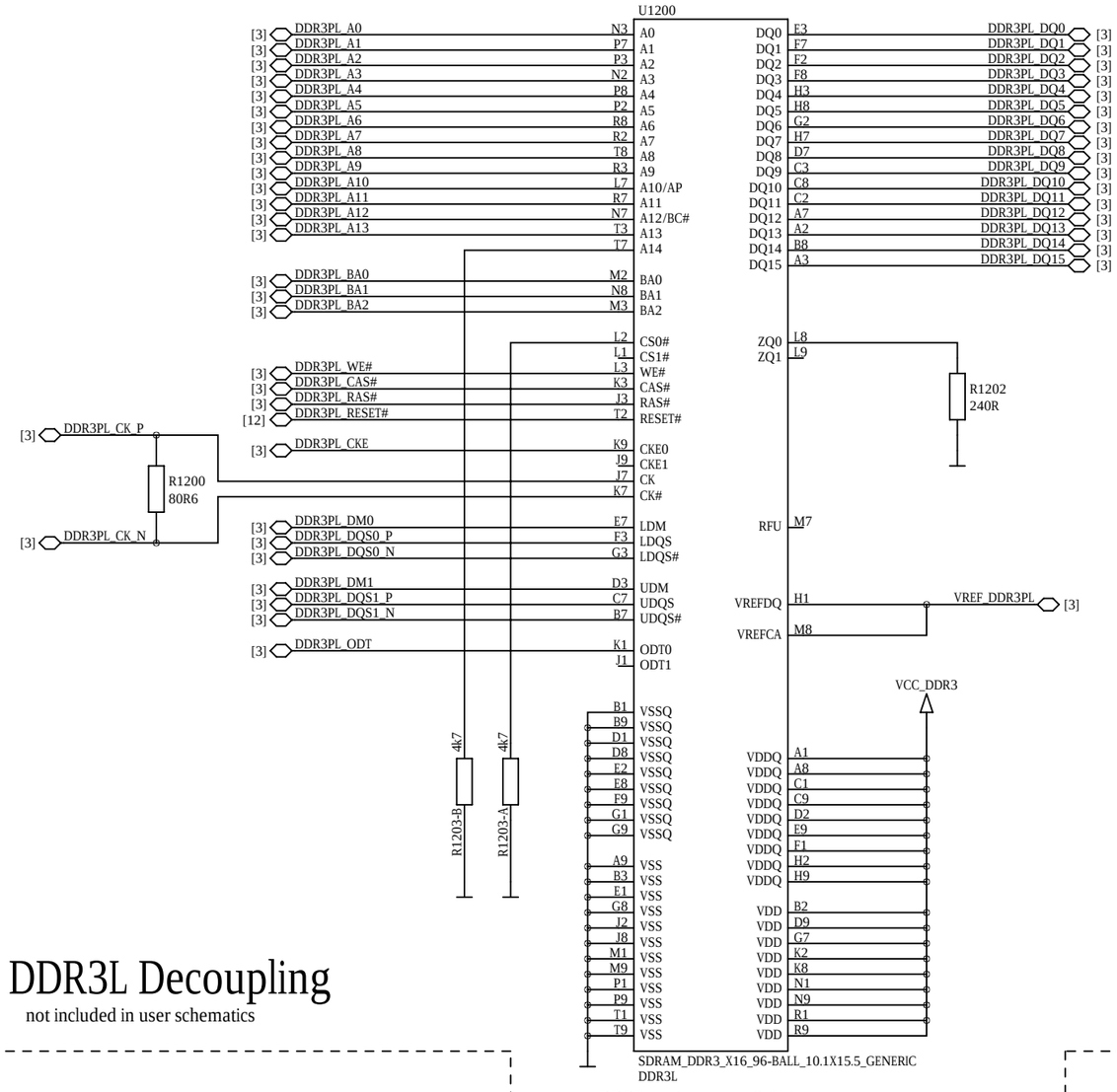

DDR3 devices up to 2 Gbit are supported.

PL DDR3L Reset

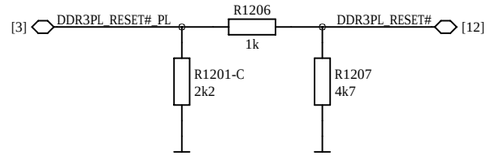

PL DDR3L DCI Resistors

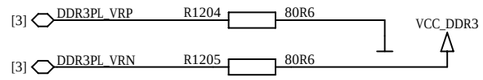

PL DDR3L Decoupling

not included in user schematics

This part is intentionally left blank.

PL DDR3L VREF Generation

not included in user schematics

This part is intentionally left blank.

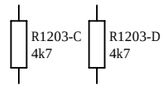

ENCLUSTRA	Copyright © 2020 by Enclustra GmbH	Sheet Name 12_PL_DDR3L_SDRAM	Customer No 0000	Revision R3.1	DNE = do not equip	Confidential	
	Company Enclustra GmbH	Project Mercury ZX1	Project No 438	Designed MHEI	Date 4 Mar 2020	Sheet/sheets 12 / 18	

DC / DC Converter 3.3V 9A 5%

not included in user schematics

This part is intentionally left blank.

DC / DC Converter 1.0V 20A 3%

not included in user schematics

This part is intentionally left blank.

Supported Voltage Ranges

Power Rail	Direction	Range	Tolerance
VCC_MOD	input	5.0V - 15V	±5%
VCC_IO_B13	input	1.2V - 3.3V	±5%
VCC_IO_B33	input	1.35V - 1.8V	±5%
VCC_IO_B34	input	1.35V - 1.8V	±5%
VCC_CFG_MIO_B12	input	1.8V(*) / 2.5-3.3V	±5%
VCC_BAT	input	2.0V - 3.6V	-
VCC_3V3	output	3.3V	±5%
VCC_2V5	output	2.5V	±5%
VCC_1V8	output	1.8V	±5%

(*) Bank CFG/MIO can run at 1.8V but the NAND Flash is not operational.

Power Input Filter

not included in user schematics

This part is intentionally left blank.

LDO 3.3V to 2.9V 0.2A

not included in user schematics

This part is intentionally left blank.

Dual DC/DC Converter

channel 1: 1.5/1.35V 2A 2.5%

channel 2: 2.5V 2A 5%

not included in user schematics

This part is intentionally left blank.

LDO 1.55V 0.15A

not included in user schematics

This part is intentionally left blank.

DDR3 Voltage Selection

	DDR3_VSEL	VCC_DDR3
Default	"Z"	1.5V
	"0"	1.35V
	"1"	Illegal

Dual DC/DC Converter

channel 1: 1.8V 2A 2.8%

channel 2: 1.2V 2A 3%

not included in user schematics

This part is intentionally left blank.

LDO 2.0V 0.3A

only equipped for U200 in the FFG package

not included in user schematics

This part is intentionally left blank.

FPGA I/O Over-Voltage Protection

not included in user schematics

This part is intentionally left blank.

ENCLUSTRA	Copyright	© 2020 by Enclustra GmbH	Sheet Name	15_POWER_1.8V_1.2V_2.0V	Customer No	0000	Revision	R3.1	DNE = do not equip		Confidential
	Company	Enclustra GmbH	Project	Mercury ZX1	Project No	438	Designed	MHEI	Date	4 Mar 2020	Sheet/sheets 15 / 18

I2C Level Shifter

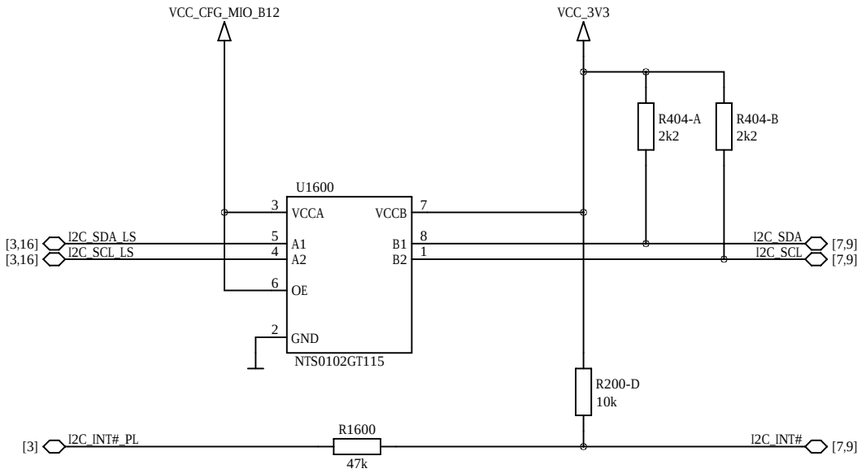

I2C / MDIO Multiplexer

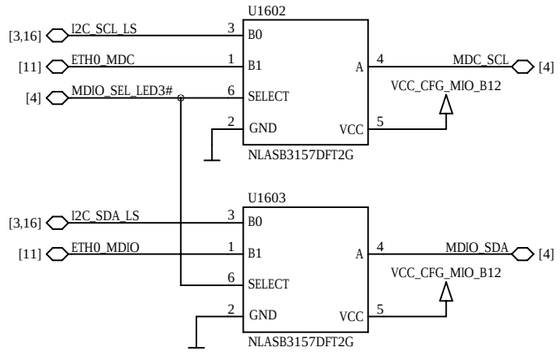

enclustra	Copyright	© 2020 by Enclustra GmbH	Sheet Name	16_I2C_INTERFACE	Customer No	0000	Revision	R3.1	DNE = do not equip	Confidential
	Company	Enclustra GmbH	Project	Mercury ZX1	Project No	438	Designed	MHEI	Date 4 Mar 2020	Sheet/sheets 16 / 18

Module Mounting Holes M3

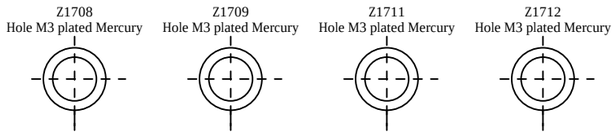

Fiducials

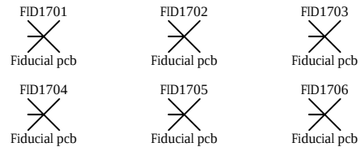

Panel Fiducials

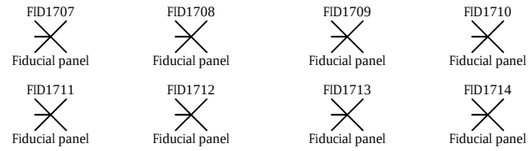

Heat Sink Mounting Holes M2

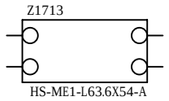

PCB / Logo / Pin-1 Marking / Text

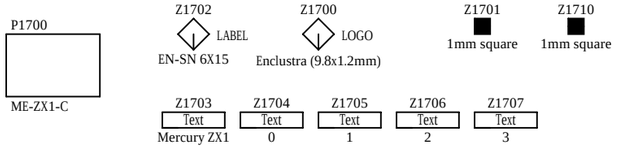

Heat Sink Mounting Screws M2

optional

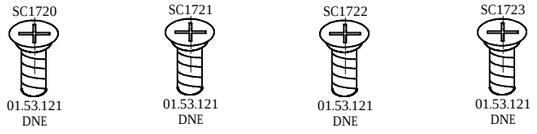

FPGA Heat Sink

optional

ATS Maxi-Grip

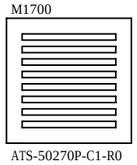

ATS Super-Grip

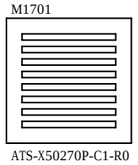

ENCLUSTRA	Copyright	© 2020 by Enclustra GmbH	Sheet Name	17_MECHANICS	Customer No	0000	Revision	R3.1	DNE = do not equip	Confidential
	Company	Enclustra GmbH	Project	Mercury ZX1	Project No	438	Designed	MHEI	Date 4 Mar 2020	Sheet/sheets 17 / 18

Component Variants

FPGA	DDR3L		NAND	Ethernet PHY	OSC33	OSC200	VREFF	MGTRES	FFG	L1U	SEC_EEPROM
Part U200B XC7Z030-2FBG676I EN100882 Part U200D XC7Z035-1FBG676I EN100876 Part U200F XC7Z045-2FFG676I EN100877	Part U800A:1 H5TC4G63CFR-RDI EN101580 Part U800A:2 K4B4G1646E-BMMA EN102238 Part U800A:3 NT5CC256M16ER-EKI EN102239 Part U801A:1 H5TC4G63CFR-RDI EN101580 Part U801A:2 K4B4G1646E-BMMA EN102238 Part U801A:3 NT5CC256M16ER-EKI EN102239	Part U1200A:1 H5TC4G63CFR-RDI EN101580 Part U1200A:2 K4B4G1646E-BMMA EN102238 Part U1200A:3 NT5CC256M16ER-EKI EN102239	Part U903A MT29F4G08ABADAWP-IT EN100272 Part U903B MT29F4G08ABADAWP-ITX EN102209	Part U1100B KSZ9031RNXIA EN101934	Part Y900A ASDMB_33.333MHZ-LC-T EN100285 Part Y900B ASEMB_33.333MHZ-LC-T EN100914	Part Y901A:1 DSC1123CI2-200.0000T EN101130 Part Y901A:2 ASDMPLV-200.000MHZ-LR-T EN100881 Part Y901B ASEMPLV-200.000MHZ-LR EN100880	C511-512, R507-508	R504-506	R1508, U1501	Part L1401:1 1u0 EN101851 Part L1401:2 1u0 EN101811 Part L1402:1 1u0 EN101851 Part L1402:2 1u0 EN101811 Part L1501:1 1u0 EN101851 Part L1501:2 1u0 EN101811 Part L1502:1 1u0 EN101851 Part L1502:2 1u0 EN101811	Part U907A ATSHA204A-MAHDA-T EN100827 Part U907B DS28CN01U-A00+ EN100280

Assembly Variants

Assembly Variant	FPGA	DDR3L	NAND	Ethernet PHY	OSC33	OSC200	VREFF	MGTRES	FFG	L1U	SEC_EEPROM
Variant EN101724:0 ME-ZX1-30-2I-D10-R3	Option EN101724:1 FPGA EN100882	Option EN101724:2 DDR3L EN102238	Option EN101724:3 NAND EN100272	Option EN101724:4 ETH EN101934	Option EN101724:5 OSC33 EN100914	Option EN101724:6 OSC200 EN101130	Option EN101724:7 VREFF DNE	Option EN101724:8 MGTRES	Option EN101724:9 FFG DNE	Option EN101724:10 L1U EN101811	Option EN101724:11 SEC_EEPROM EN100827
Variant EN101726:0 ME-ZX1-35-1I-D10-R3	Option EN101726:1 FPGA EN100876	Option EN101726:2 DDR3L EN102238	Option EN101726:3 NAND EN100272	Option EN101726:4 ETH EN101934	Option EN101726:5 OSC33 EN100914	Option EN101726:6 OSC200 EN101130	Option EN101726:7 VREFF	Option EN101726:8 MGTRES DNE	Option EN101726:9 FFG DNE	Option EN101726:10 L1U EN101811	Option EN101726:11 SEC_EEPROM EN100827
Variant EN101728:0 ME-ZX1-45-2I-D10-P-R3	Option EN101728:1 FPGA EN100877	Option EN101728:2 DDR3L EN102238	Option EN101728:3 NAND EN100272	Option EN101728:4 ETH EN101934	Option EN101728:5 OSC33 EN100914	Option EN101728:6 OSC200 EN101130	Option EN101728:7 VREFF	Option EN101728:8 MGTRES DNE	Option EN101728:9 FFG	Option EN101728:10 L1U EN101811	Option EN101728:11 SEC_EEPROM EN100827