Enclustra User Schematics

Mercury ZX5 Revision 3.2

Disclaimer

User schematics do not include proprietary Enclustra design elements, such as power supply circuits.
These circuits use optimized designs which are extremely compact and remain proprietary to Enclustra.
The user manual provides all necessary information to use the module and its interfaces.

User schematics are provided after purchase of Enclustra hardware, and may also be provided in certain cases before purchase, to assist in product evaluation.
No part of the schematics may be copied or modified without written permission from Enclustra.

Full schematics, including a full bill-of-materials, may be available through the purchase of a hardware licence for the product in question.
Please contact Enclustra Sales for more information.

Note: DNE = Do Not Equip (parts not equipped by default)

© Enclustra GmbH

Mercury ZX5 SoC Module

Revision 3.2

Sheet 1: Cover
Sheet 2: FPGA Configuration
Sheet 3: FPGA Banks 13 / 34 / 35 / 112
Sheet 4: FPGA PS DDR / MIO
Sheet 5: FPGA Power
Sheet 6: FPGA Decoupling
Sheet 7: Module Connectors
Sheet 8: DDR3L SDRAM
Sheet 9: Oscillator / Real-time Clock
Sheet 10: Flash / Secure EEPROM
Sheet 11: Gigabit Ethernet PHY
Sheet 12: USB 2.0 PHY
Sheet 13: Power 3.3V / 1.0V
Sheet 14: Power 1.35V / 2.5V
Sheet 15: Power 1.8V / 1.2V
Sheet 16: I2C Interface
Sheet 17: Mechanics
Sheet 18: Assembly Variants

FPGA Configuration

VCCO = VCC_CFG_MIO

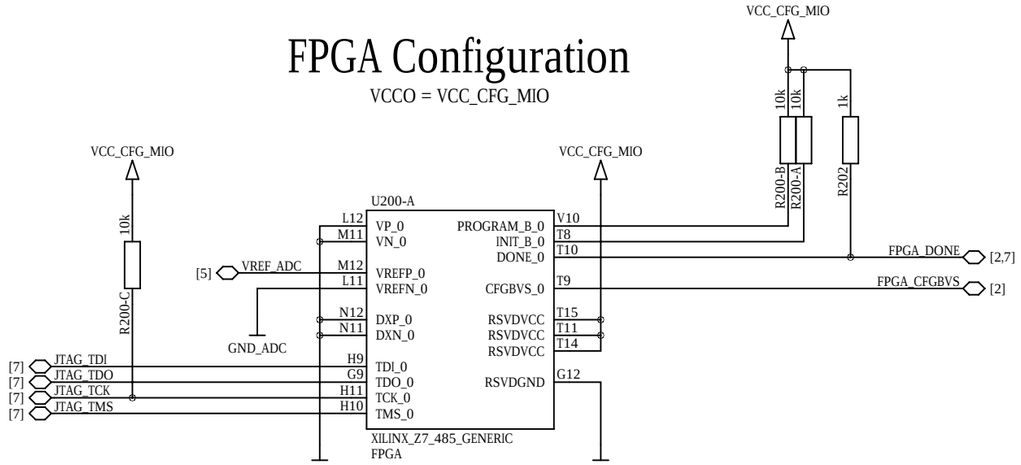

PS Boot Mode Straps

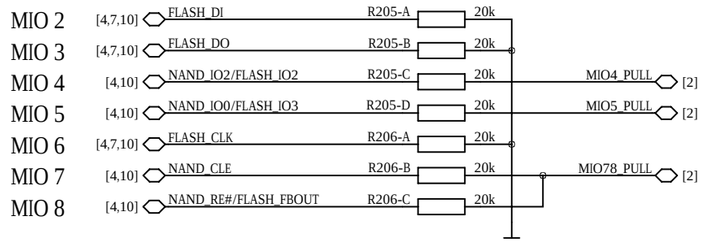

Boot Modes

	Boot Mode		Mode
	1	0	
	0	0	JTAG
	0	1	NAND
	1	0	QSPI
Default	1	1	SD Card

Reset Circuit

optional

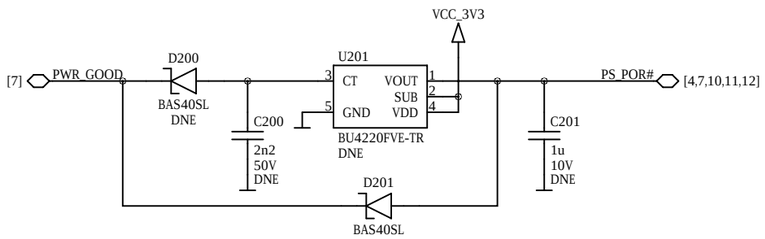

Boot Mode Select

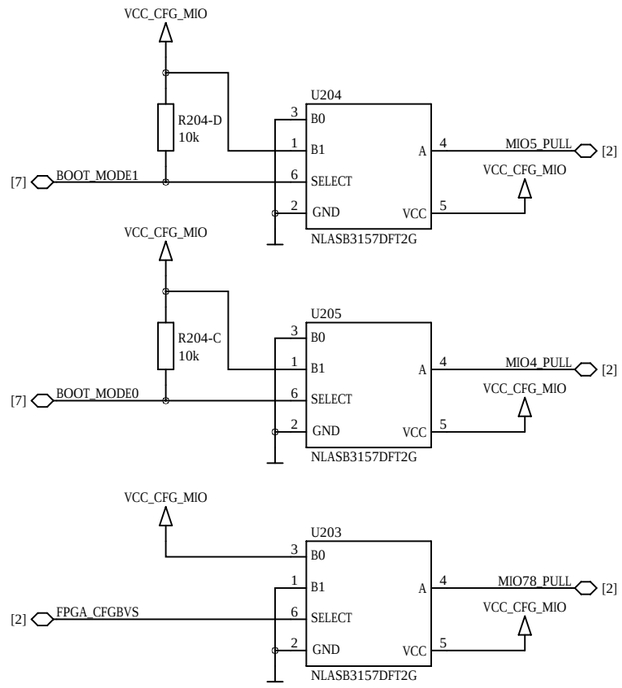

CVS Voltage Detection

not included in user schematics

This part is intentionally left blank.

Pull-up During Configuration

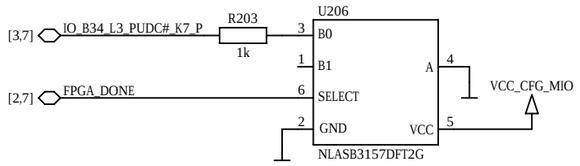

FPGA Bank 13

VCCO = VCC_IO_B13

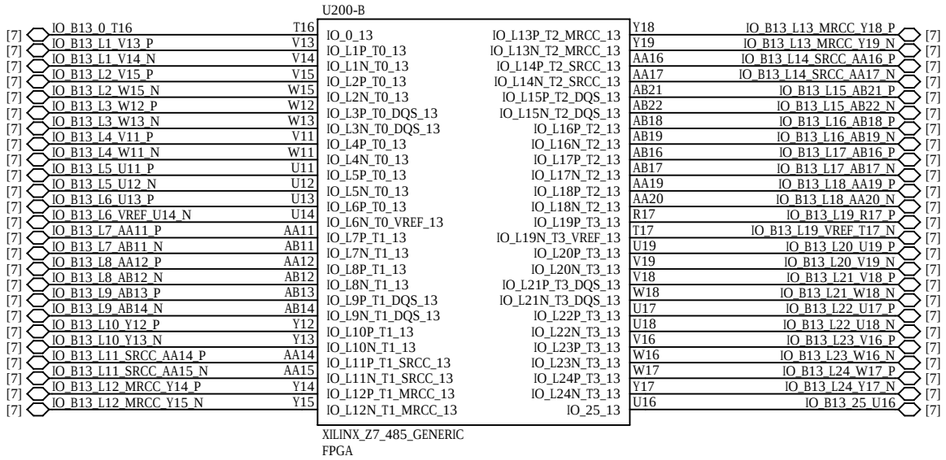

FPGA Bank 34

VCCO = VCC_IO_B34

1.8V only for XC7Z030 device

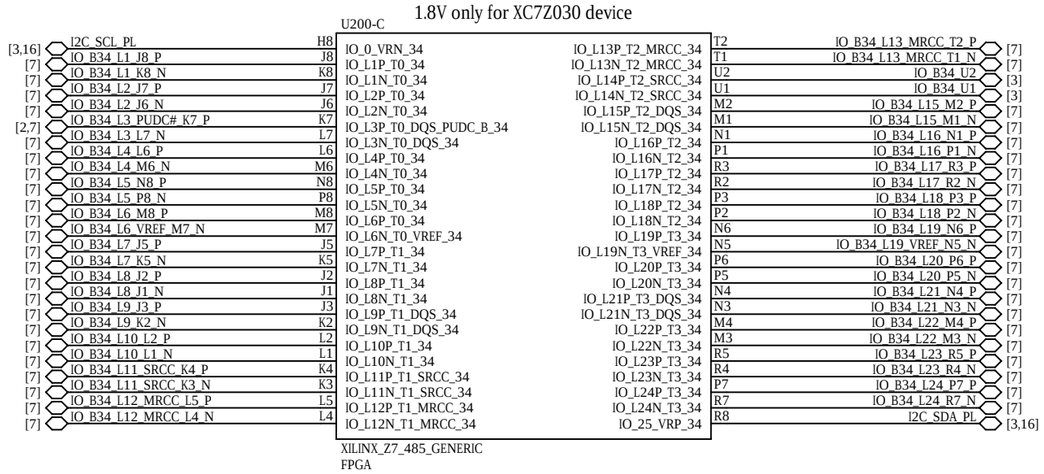

FPGA MGT Bank 112

Do not equip R300 for XC7Z015 device.

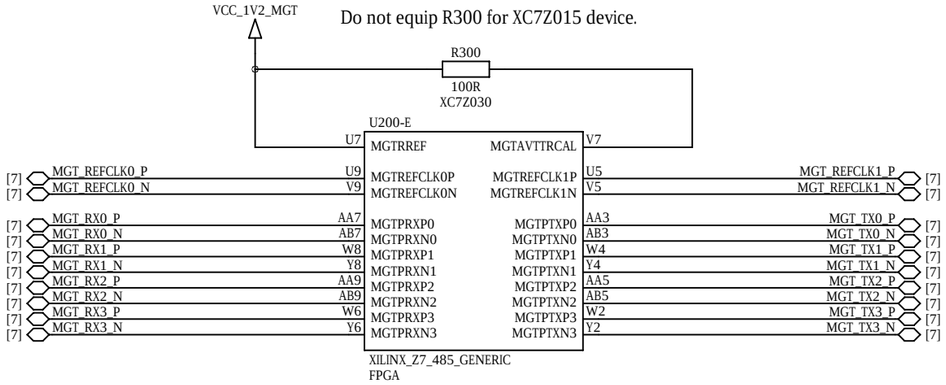

FPGA Bank 35

VCCO = VCC_IO_B35

1.8V only for XC7Z030 device

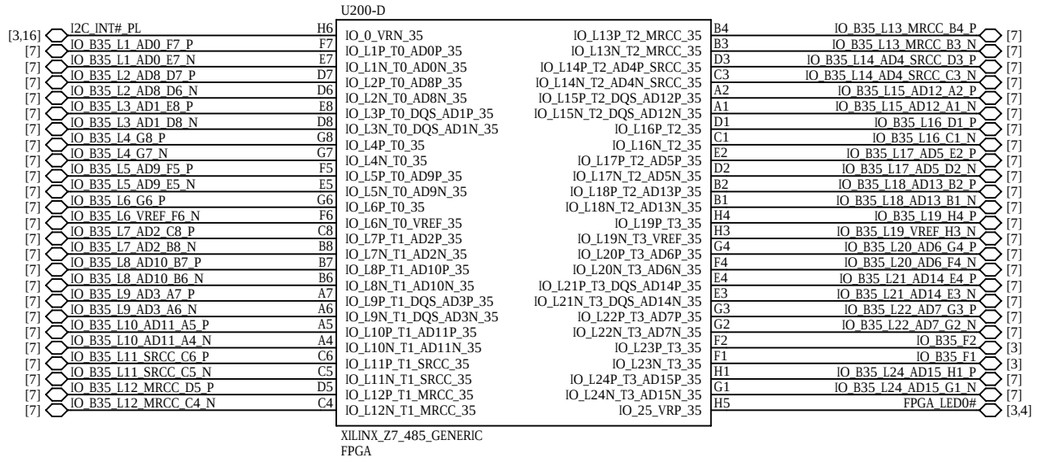

Bank 34/35 Level Shifter

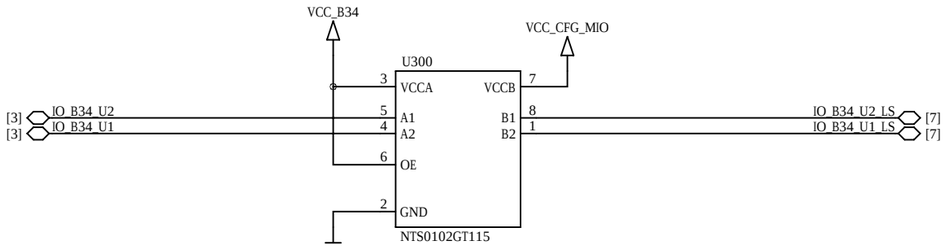

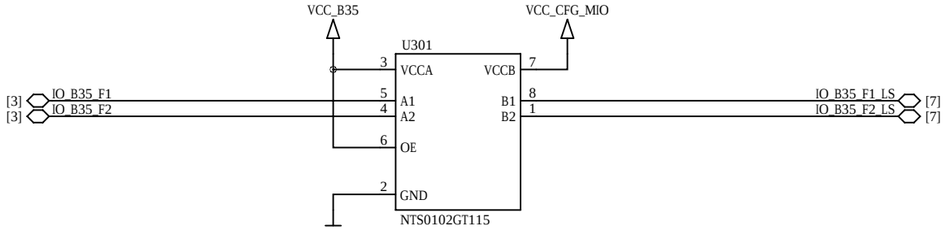

DCI Resistors

optional, not supported by XC7Z015 device

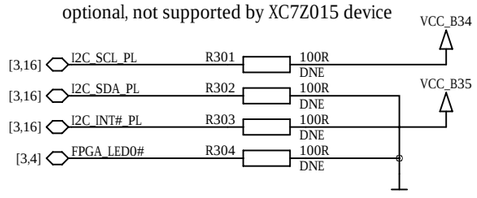

ENCLUSTRA	Copyright	© 2020 by Enclustra GmbH	Sheet Name	3_FPGA_BANK_13_34_35_112	Customer No	0000	Revision	R3.2	DNE = do not equip	Confidential
	Company	Enclustra GmbH	Project	Mercury ZX5	Project No	427	Designed	MHEI	Date 20 Mar 2020	Sheet/sheets 3 / 18

PS DDR

VCCO = VCC_1V35

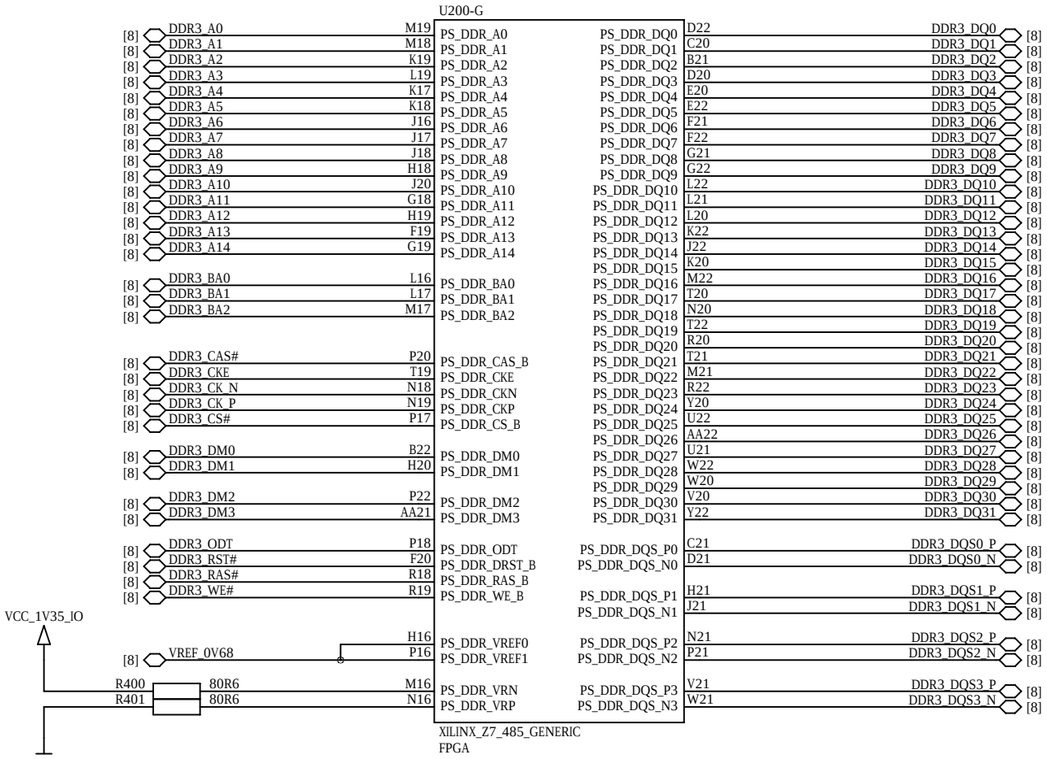

PS MIO

VCCO = VCC_CFG_MIO

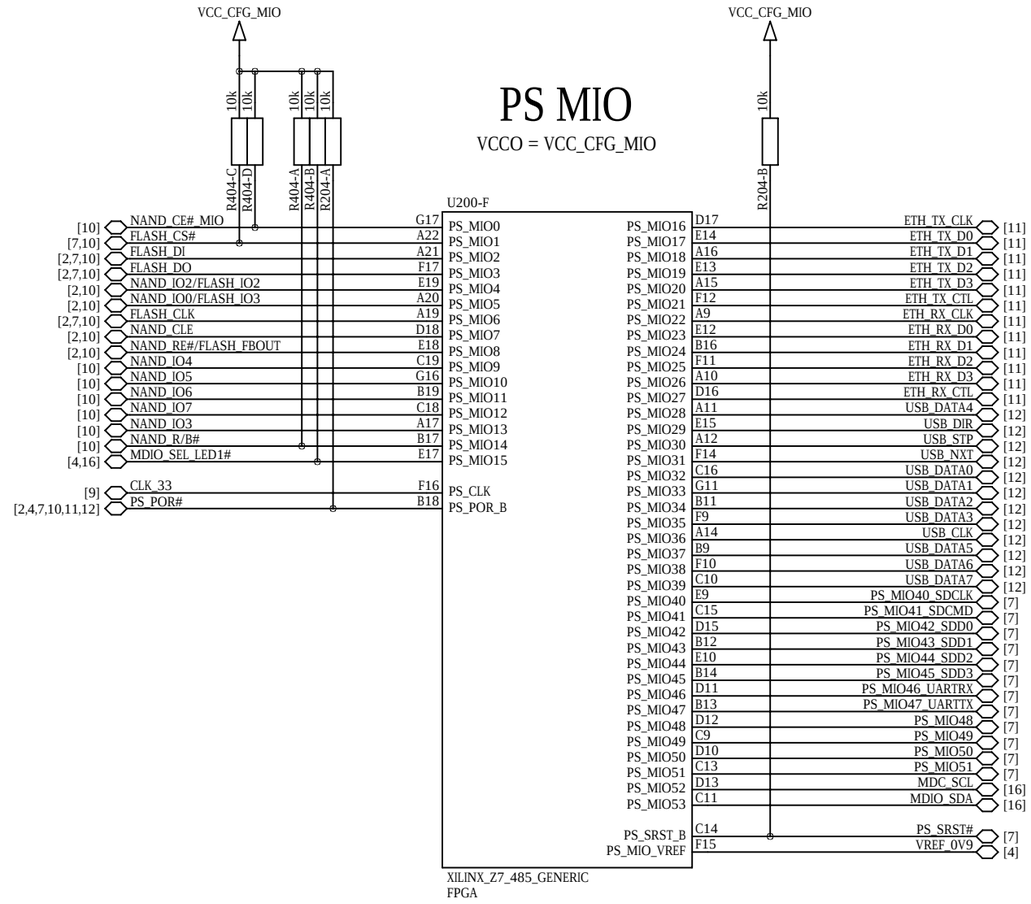

User LEDs

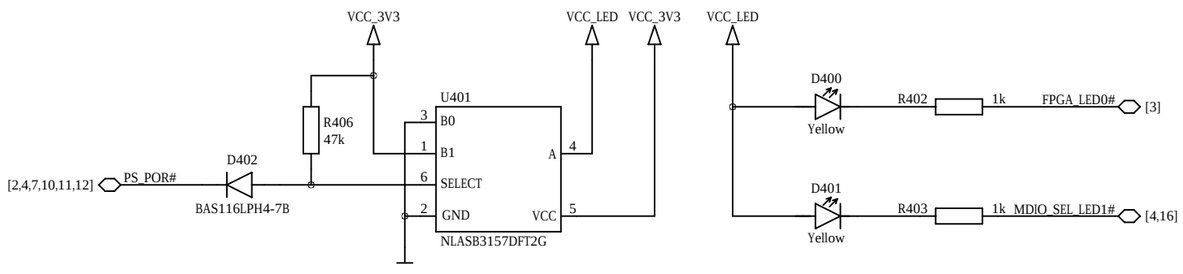

PS VREF Generation

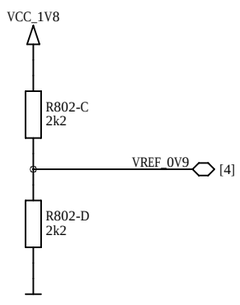

ENCLUSTRA	Copyright	© 2020 by Enclustra GmbH	Sheet Name	4_FPGA_PS_DDR/PS_MIO	Customer No	0000	Revision	R3.2	DNE = do not equip	Confidential
	Company	Enclustra GmbH	Project	Mercury ZX5	Project No	427	Designed	MHEI	Date 20 Mar 2020	Sheet/sheets 4 / 18

FPGA Power

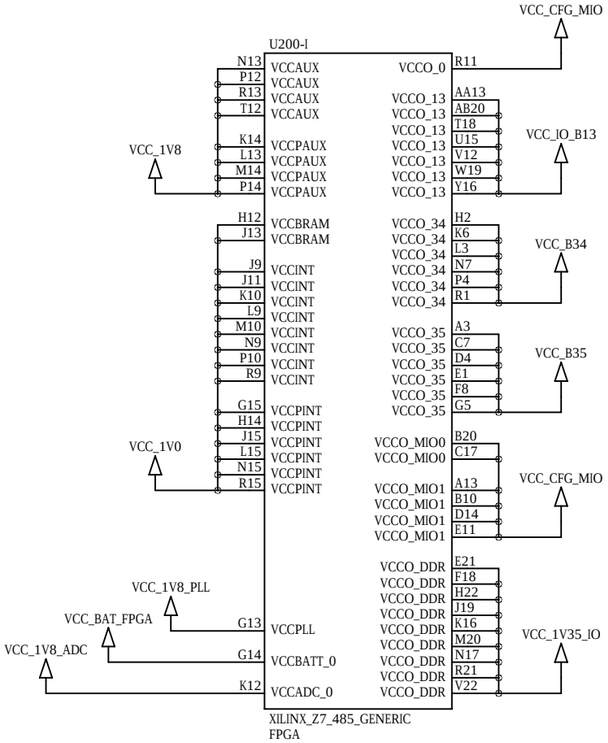

FPGA MGT Power

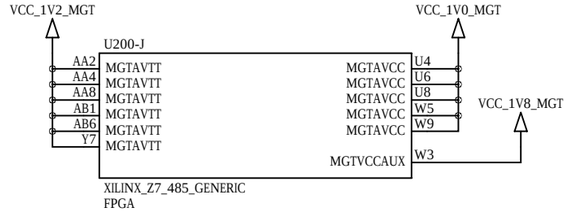

FPGA Ground

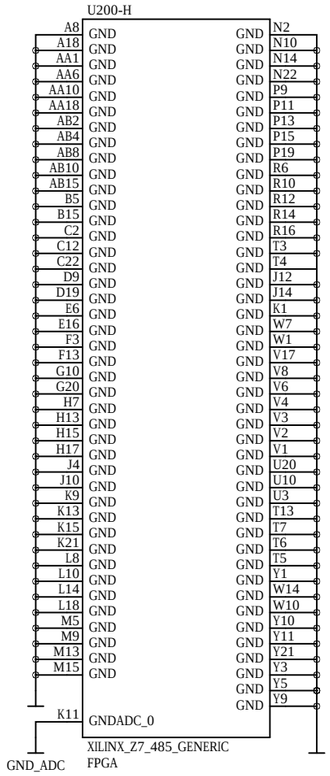

MGT Power Filter and Decoupling

not included in user schematics

This part is intentionally left blank.

FPGA ADC Supply Filter

not included in user schematics

This part is intentionally left blank.

FPGA ADC Reference Voltage

optional

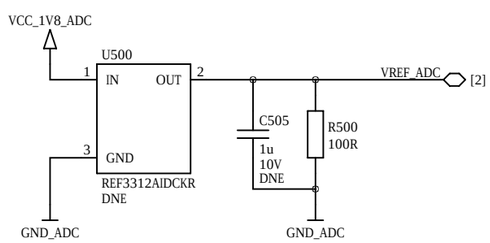

PS PLL Power Filter

not included in user schematics

This part is intentionally left blank.

ENCLUSTRA	Copyright	© 2020 by Enclustra GmbH	Sheet Name	5_FPGA_POWER	Customer No	0000	Revision	R3.2	DNE = do not equip	Confidential
	Company	Enclustra GmbH	Project	Mercury ZX5	Project No	427	Designed	MHEI	Date 20 Mar 2020	Sheet/sheets 5 / 18

FPGA Decoupling

not included in user schematics

This part is intentionally left blank.

Power Decoupling

not included in user schematics

This part is intentionally left blank.

Voltage Monitoring

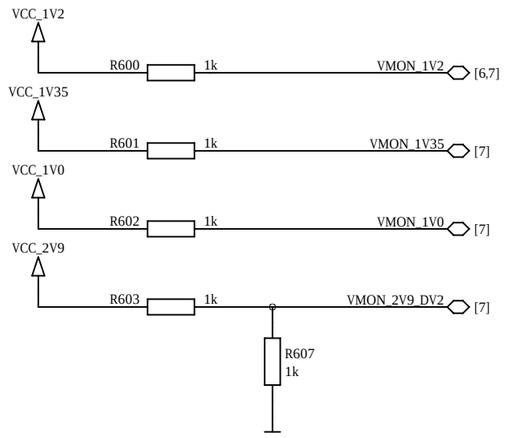

FPGA Battery Voltage

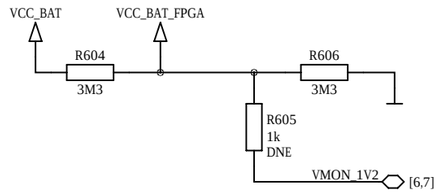

ENCLUSTRA	Copyright	© 2020 by Enclustra GmbH	Sheet Name	6_FPGA_DECOUPLING	Customer No	0000	Revision	R3.2	DNE = do not equip	Confidential
	Company	Enclustra GmbH	Project	Mercury ZX5	Project No	427	Designed	MHEI	Date 20 Mar 2020	Sheet/sheets 6 / 18

Module Connector A

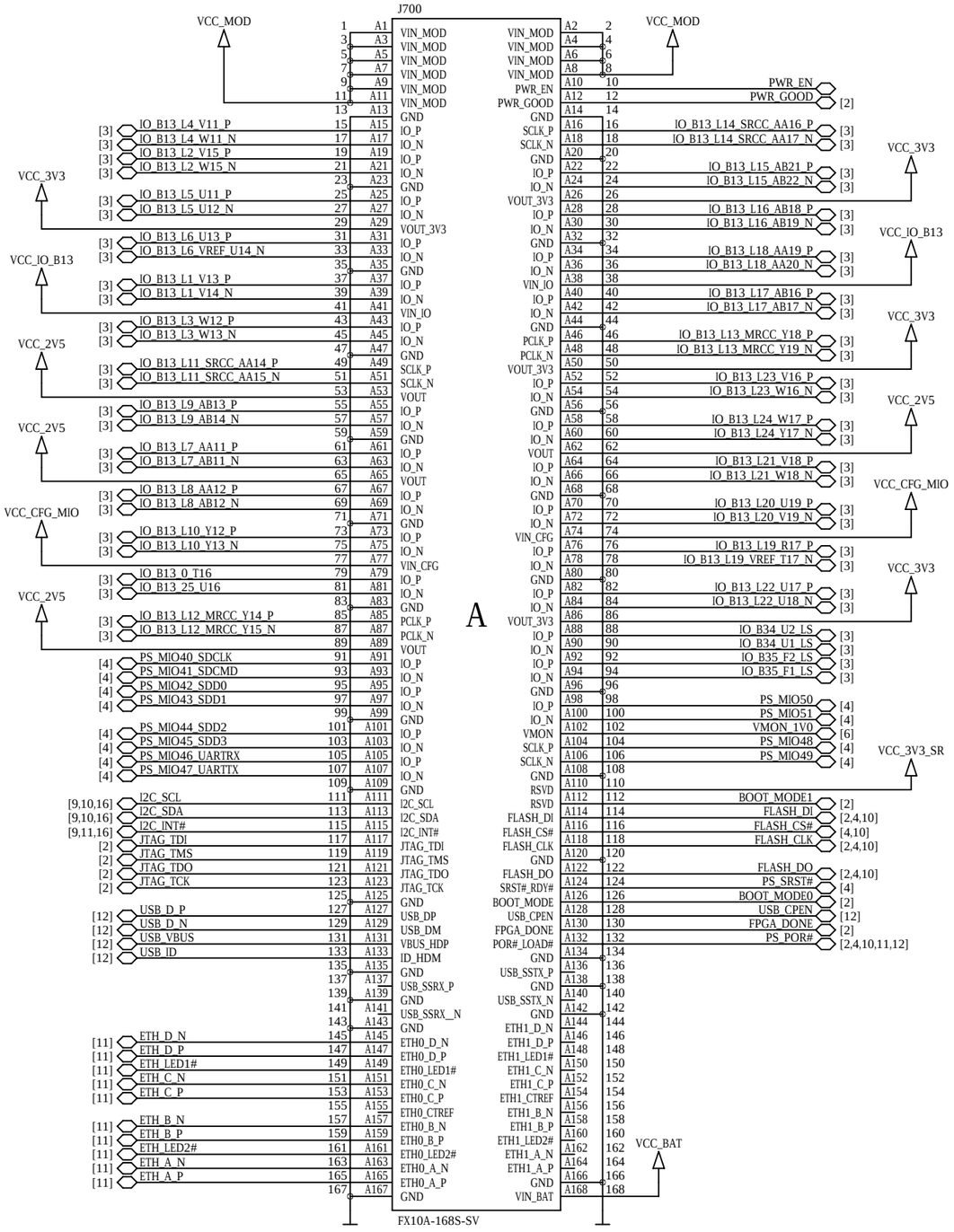

Module Connector B

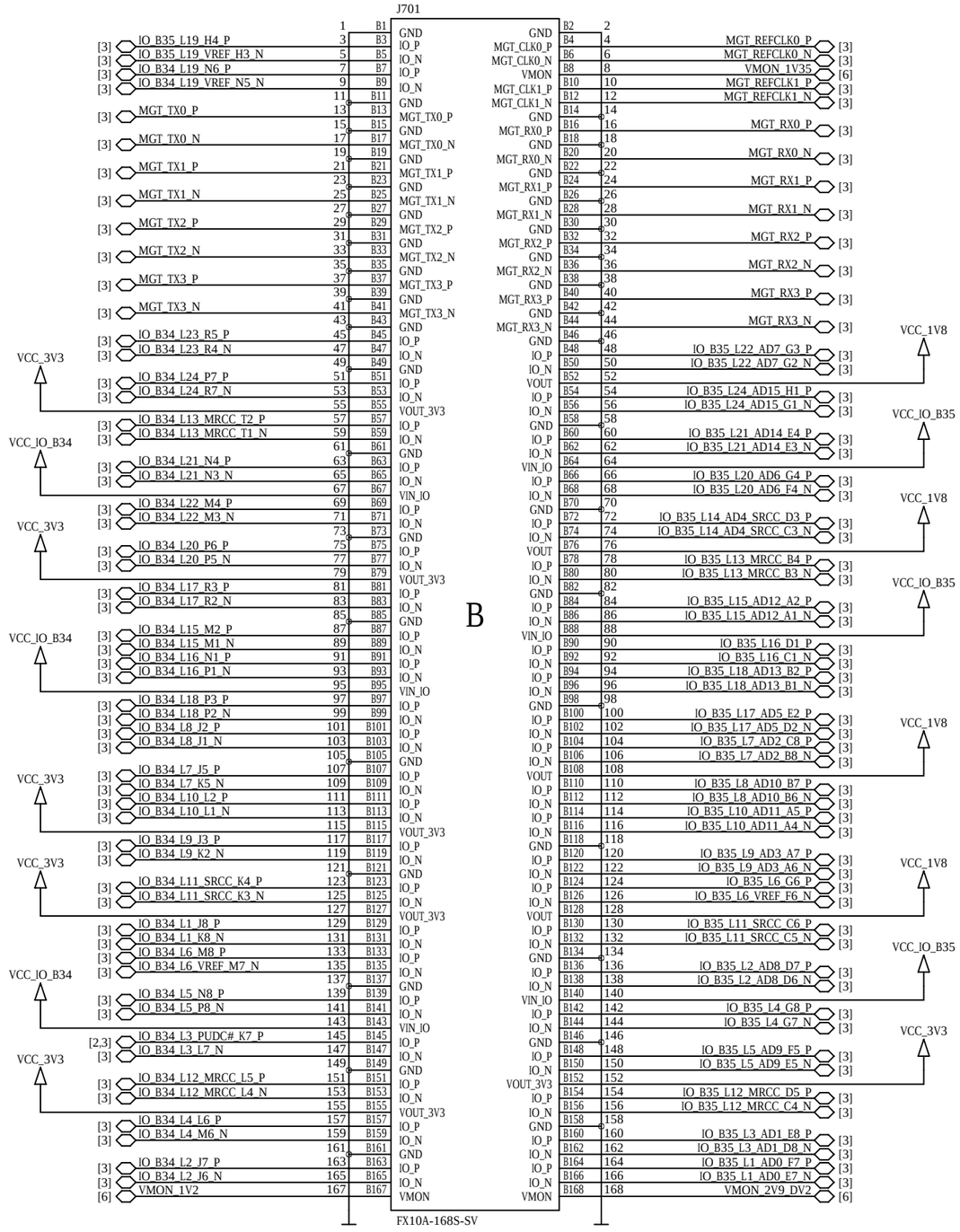

ENCLUSTRA	Copyright	© 2020 by Enclustra GmbH	Sheet Name	7_MODULE_CONNECTORS	Customer No 0000	Revision R3.2	DNE = do not equip	Confidential
	Company	Enclustra GmbH	Project	Mercury ZX5	Project No 427	Designed MHEI	Date 20 Mar 2020	Sheet/sheets 7 / 18

DDR3L SDRAM Bytes 0-1

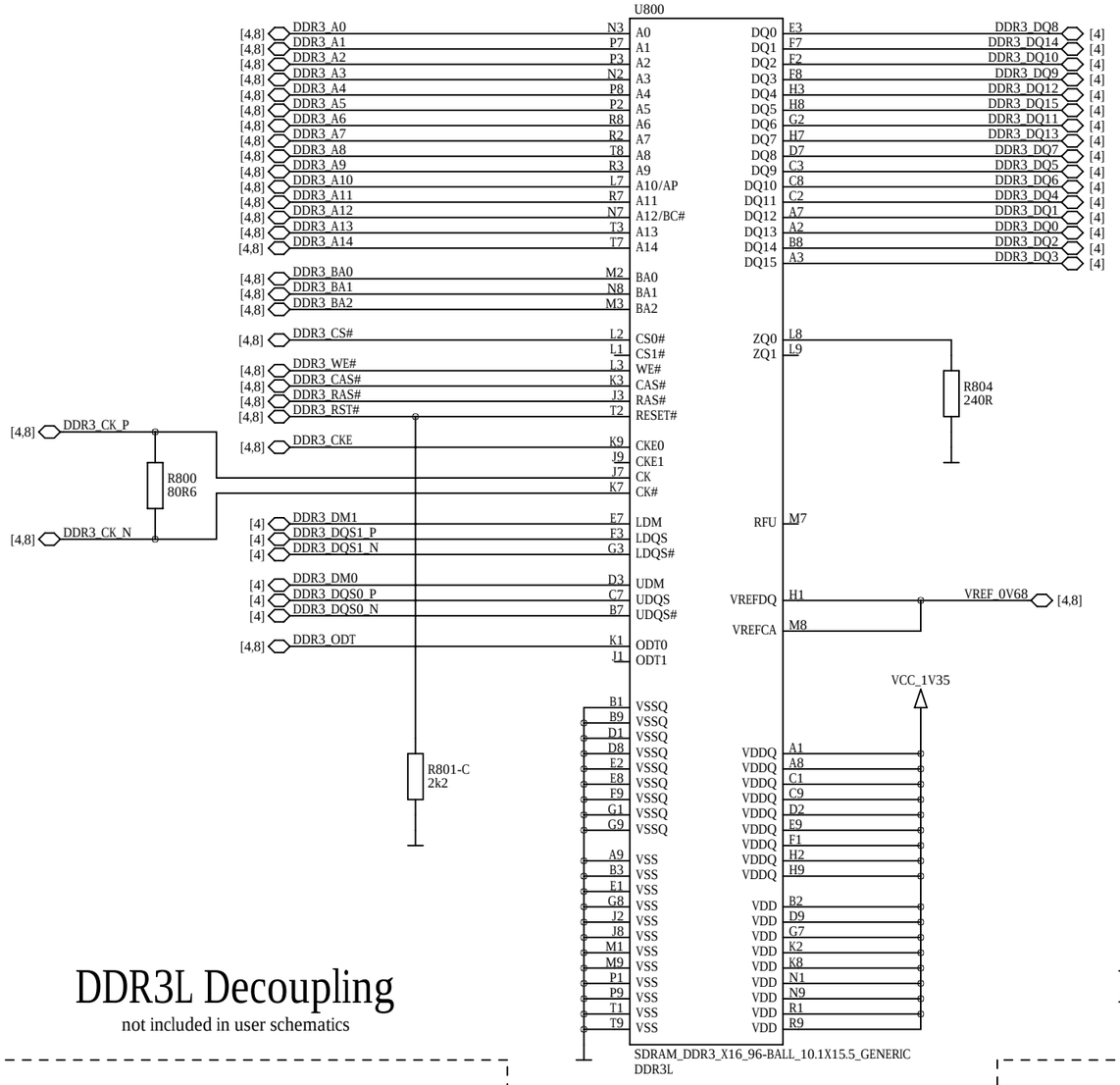

DDR3L SDRAM Bytes 2-3

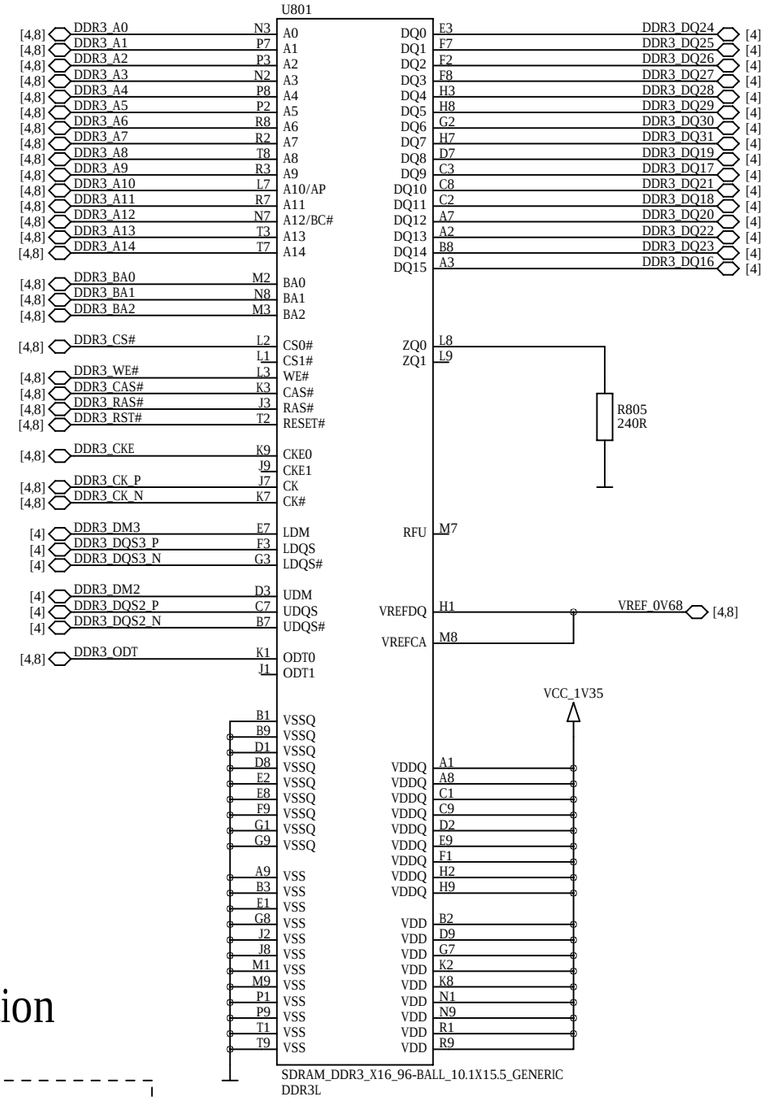

DDR3L Decoupling

not included in user schematics

This part is intentionally left blank.

DDR3L VREF Generation

not included in user schematics

This part is intentionally left blank.

R801-D
2k2

ENCLUSTRA	Copyright	© 2020 by Enclustra GmbH	Sheet Name	8_DDR3L_SDRAM	Customer No	0000	Revision	R3.2	DNE = do not equip	Confidential
	Company	Enclustra GmbH	Project	Mercury ZX5	Project No	427	Designed	MHEI	Date 20 Mar 2020	Sheet/sheets 8 / 18

33 MHz Oscillator

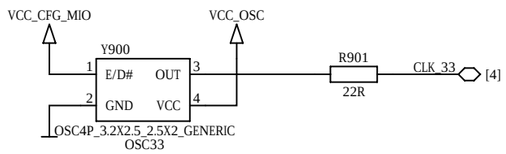

Oscillator Power Filter

not included in user schematics

This part is intentionally left blank.

Real-time Clock

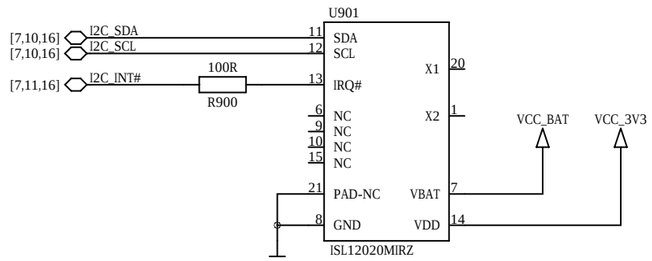

I2C Addresses

RTC registers: 1 1 0 1 1 1 1 Rw

User SRAM: 1 0 1 0 1 1 1 Rw

Quad SPI Flash

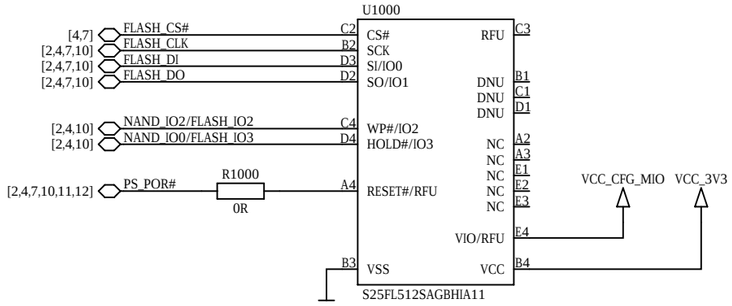

NAND Flash

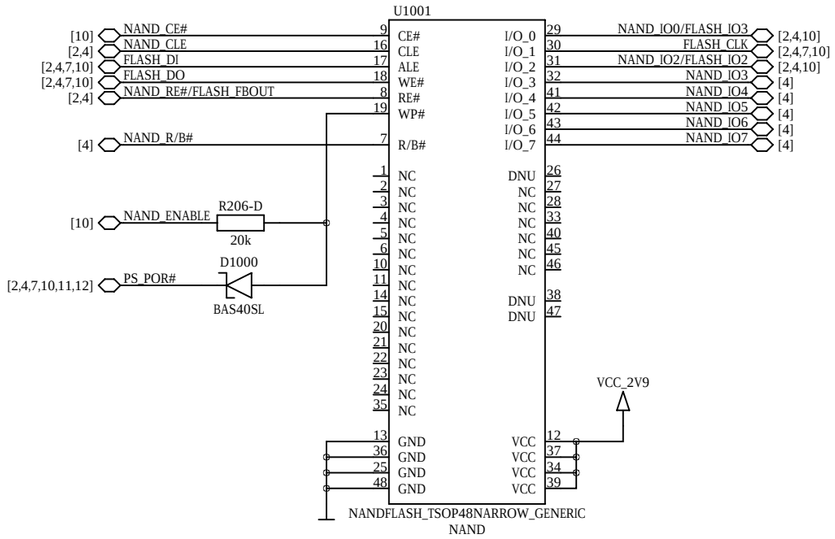

NAND Flash Enable

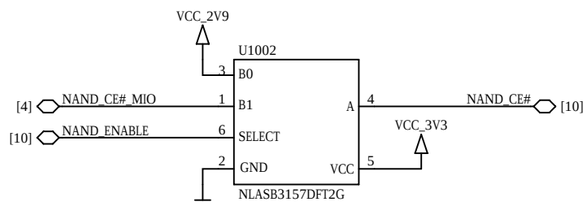

Secure EEPROM

for Enclustra use only

only one EEPROM can be mounted

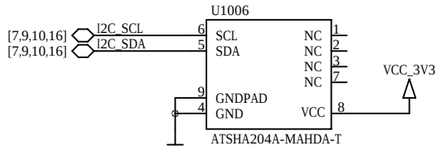

I2C Address: 1 1 0 0 1 0 0 Rw

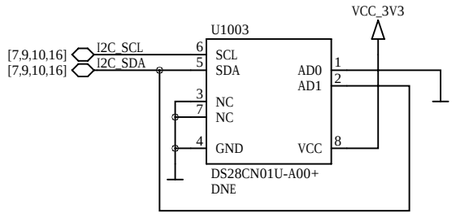

I2C Address: 1 0 1 1 1 0 0 Rw

ENCLUSTRA	Copyright	© 2020 by Enclustra GmbH	Sheet Name	10_FLASH_EEPROM	Customer No	0000	Revision	R3.2	DNE = do not equip	Confidential
	Company	Enclustra GmbH	Project	Mercury ZX5	Project No	427	Designed	MHEI	Date 20 Mar 2020	Sheet/sheets 10 / 18

Gigabit Ethernet PHY

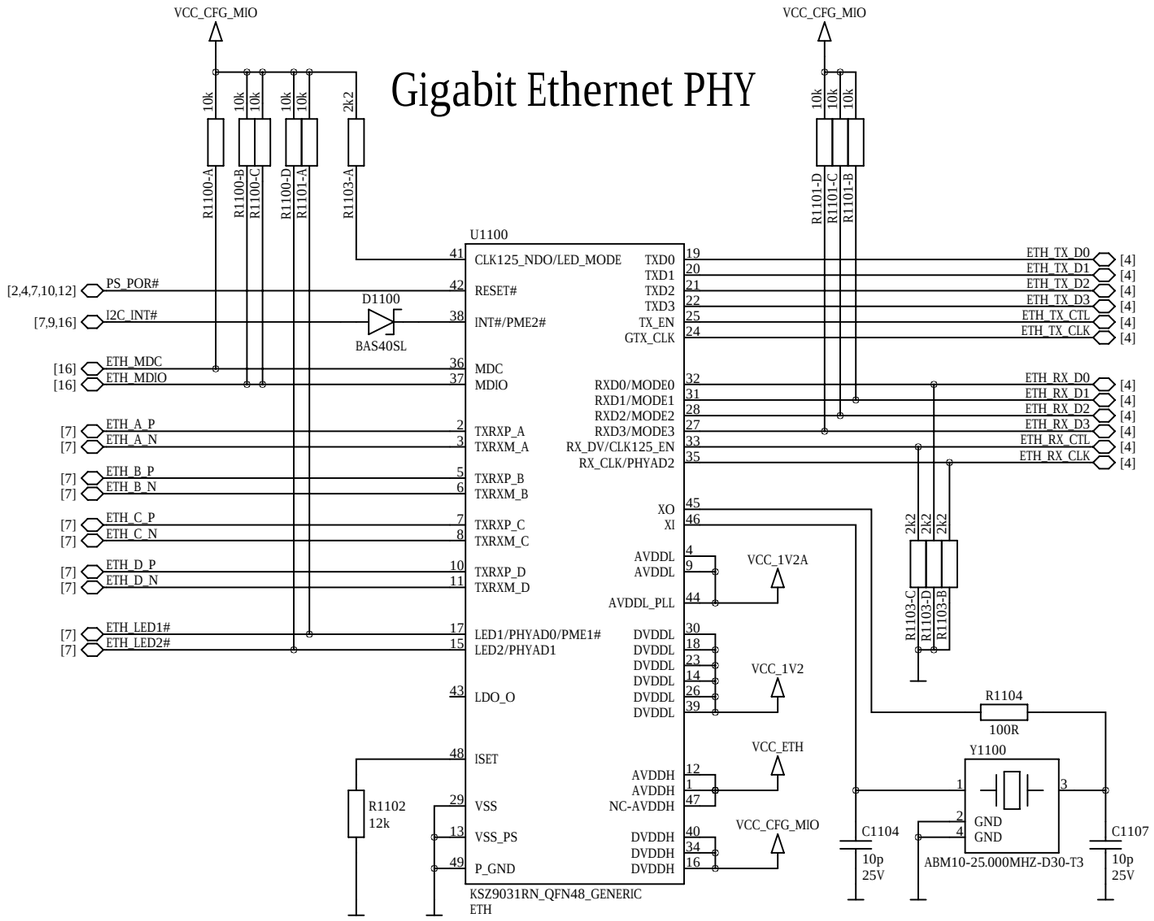

MODE<3:0> = 1110 -> RGMII, all capabilities
LED_Mode Pull up = Single LED
PhyAddress <2:0> = 011 -> 3
LED1 and LED2 are active low

Ethernet Supply Filter

not included in user schematics

This part is intentionally left blank.

Gigabit Ethernet Power

not included in user schematics

This part is intentionally left blank.

ENCLUSTRA	Copyright	© 2020 by Enclustra GmbH	Sheet Name	11_GIGABIT_ETHERNET_PHY	Customer No	0000	Revision	R3.2	DNE = do not equip	Confidential
	Company	Enclustra GmbH	Project	Mercury ZX5	Project No	427	Designed	MHEI	Date 20 Mar 2020	Sheet/sheets 11 / 18

USB 2.0 PHY

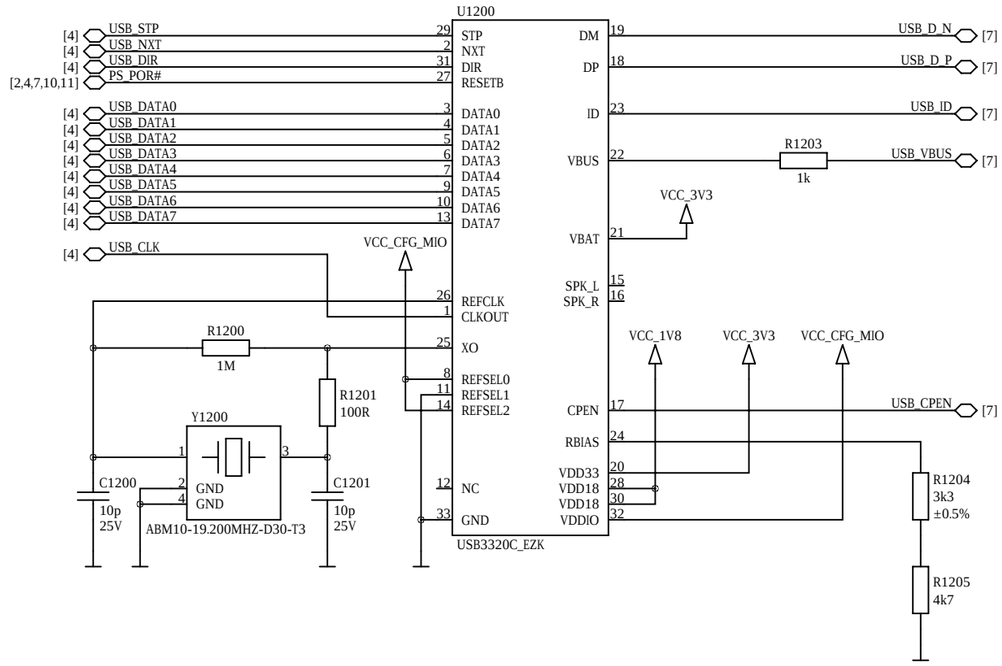

USB 2.0 PHY Decoupling

not included in user schematics

This part is intentionally left blank.

DC / DC Converter 3.3V 9A 5%

not included in user schematics

This part is intentionally left blank.

DC / DC Converter 1.0V 9A 3%

not included in user schematics

This part is intentionally left blank.

Supported Voltage Ranges

Power Rail	Direction	Range		Tolerance
		XC7Z015	XC7Z030	
VCC_MOD	input	5.0V - 15V	5.0V - 15V	±5%
VCC_IO_B13	input	1.2V - 3.3V	1.2V - 3.3V	±5%
VCC_IO_B34	input	1.8V - 3.3V	1.8V	±5%
VCC_IO_B35	input	1.8V - 3.3V	1.8V	±5%
VCC_CFG_MIO	input	1.8V, 2.5V - 3.3V	1.8V, 2.5V - 3.3V	±5%
VCC_BAT	input	2.0V - 3.6V	2.0V - 3.6V	-
VCC_3V3	output	3.3V	3.3V	±5%
VCC_2V5	output	2.5V	2.5V	±5%
VCC_1V8	output	1.8V	1.8V	±5%

Bank CFG/MIO can run at 1.8V but the NAND Flash is not operational.

Input Power Filter

not included in user schematics

This part is intentionally left blank.

LDO 2.9V 0.2A

not included in user schematics

This part is intentionally left blank.

Dual DC/DC Converter

channel 1: 2.5V 1A 3%

channel 2: 1.35V 1.5A 5%

not included in user schematics

This part is intentionally left blank.

DDR3 Self Refresh

optional

not included in user schematics

This part is intentionally left blank.

Dual DC/DC Converter

channel 1: 1.2V 1A 5%

channel 2: 1.8V 1.5A 2.8%

not included in user schematics

This part is intentionally left blank.

FPGA I/O Over-Voltage Protection

only equipped for XC7Z030 device

not included in user schematics

This part is intentionally left blank.

I2C Level Shifter (PL)

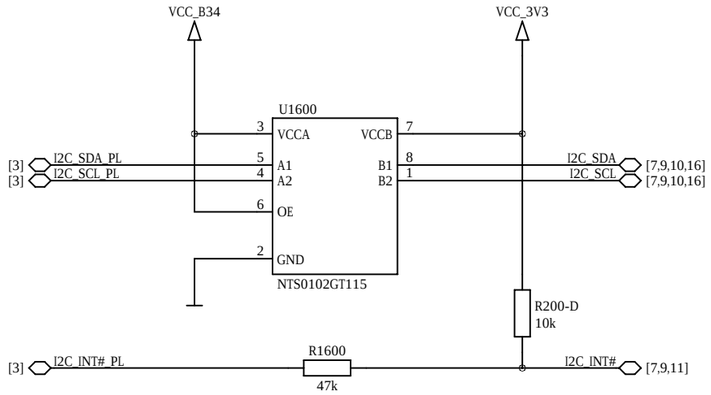

I2C / MDIO Multiplexer

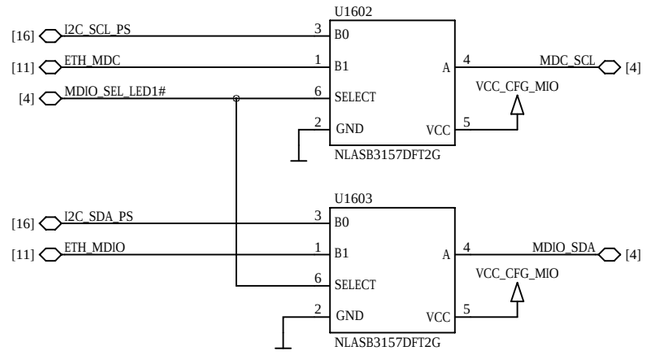

I2C Level Shifter (PS)

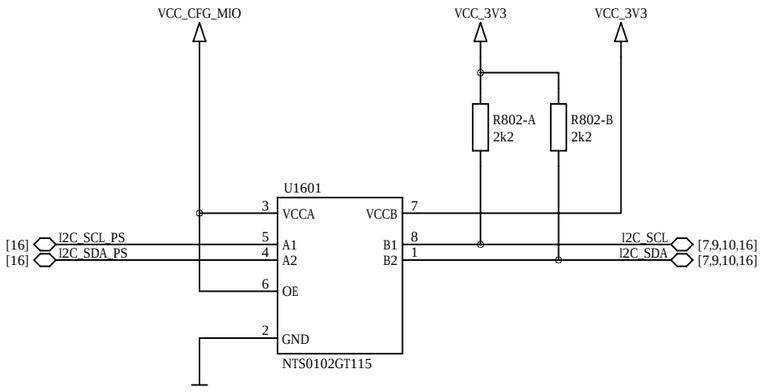

ENCLUSTRA	Copyright	© 2020 by Enclustra GmbH	Sheet Name	16_I2C_INTERFACE	Customer No	0000	Revision	R3.2	DNE = do not equip	Confidential
	Company	Enclustra GmbH	Project	Mercury ZX5	Project No	427	Designed	MHEI	Date 20 Mar 2020	Sheet/sheets 16 / 18

Panel Fiducials

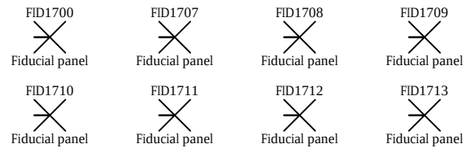

Module Mounting Holes M3

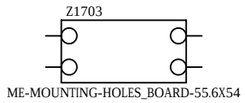

PCB Fiducials

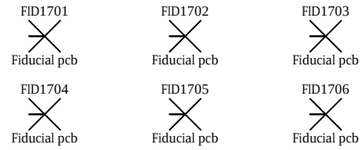

Heat Sink Mounting Holes M2

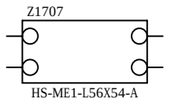

PCB / Logo / Pin-1 Marking

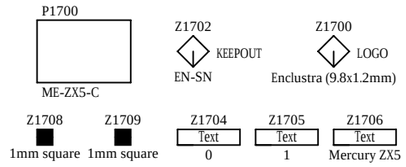

FPGA Heat Sink

optional

ATS Maxi Grip

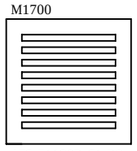

ATS Super Grip

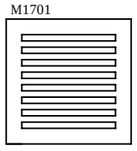

Heat Sink Mounting Screws M2

optional

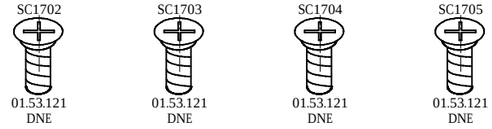

ENCLUSTRA	Copyright	© 2020 by Enclustra GmbH	Sheet Name	17_MECHANICS	Customer No	0000	Revision	R3.2	DNE = do not equip	Confidential
	Company	Enclustra GmbH	Project	Mercury ZX5	Project No	427	Designed	MHEI	Date 20 Mar 2020	Sheet/sheets 17 / 18

Component Variants

FPGA	DDR3L SDRAM		NAND	Ethernet PHY	Osc	L2U2	XC7Z030
Part U200A XC7Z015-2CLG485I EN100716 Part U200B XC7Z030-1SBG485I EN100904 Part U200C XC7Z030-3SBG485E EN101174	Part U800A:1 K4B4G1646E-BMMA EN102238 Part U800A:2 NT5CC256M16ER-EKI EN102239 Part U800A:3 H5TC4G63CFR-RDI EN101580 Part U800B NT5CC256M16CP-DI EN101027	Part U801A:1 K4B4G1646E-BMMA EN102238 Part U801A:2 NT5CC256M16ER-EKI EN102239 Part U801A:3 H5TC4G63CFR-RDI EN101580 Part U801B NT5CC256M16CP-DI EN101027	Part U1001A MT29F4G08ABADAWP-IT EN100272 Part U1001B MT29F4G08ABADAWP EN100271 Part U1001C MT29F4G08ABADAWP-ITX EN102209	Part U1100A KSZ9031RNXIA EN101934 Part U1100B KSZ9031RNXCA EN100202	Part Y900A ASDMB_33.333MHZ-LC-T EN100285 Part Y900B ASEMB_33.333MHZ-LC-T EN100914	Part L1401:1 2u2 EN101850 Part L1401:2 2u2 EN101849 Part L1402:1 2u2 EN101850 Part L1402:2 2u2 EN101849 Part L1501:1 2u2 EN101850 Part L1501:2 2u2 EN101849 Part L1502:1 2u2 EN101850 Part L1502:2 2u2 EN101849	C503-C504 D1501-D1502 L503 R300-R304,R1509-R1510 U1501-U1502

Assembly Variants

Assembly Variant	FPGA	DDR3L SDRAM	NAND	Ethernet PHY	Osc	L2U2	XC7Z030
Variant EN102232:0 ME-ZX5-15-2I-D10-R3.2	Option EN102232:1 FPGA EN100716	Option EN102232:2 DDR3L EN102238	Option EN102232:3 NAND EN100272	Option EN102232:4 ETH EN101934	Option EN102232:5 OSC33 EN100914	Option EN102232:6 L2U2 EN101850	Option EN102232:7 XC7Z030 DNE
Variant EN102234:0 ME-ZX5-30-1I-D10-R3.2	Option EN102234:1 FPGA EN100904	Option EN102234:2 DDR3L EN102238	Option EN102234:3 NAND EN100272	Option EN102234:4 ETH EN101934	Option EN102234:5 OSC33 EN100914	Option EN102234:6 L2U2 EN101850	Option EN102234:7 XC7Z030
Variant EN102235:0 ME-ZX5-30-3C-D10-R3.2	Option EN102235:1 FPGA EN101174	Option EN102235:2 DDR3L EN102238	Option EN102235:3 NAND EN100272	Option EN102235:4 ETH EN101934	Option EN102235:5 OSC33 EN100914	Option EN102235:6 L2U2 EN101850	Option EN102235:7 XC7Z030