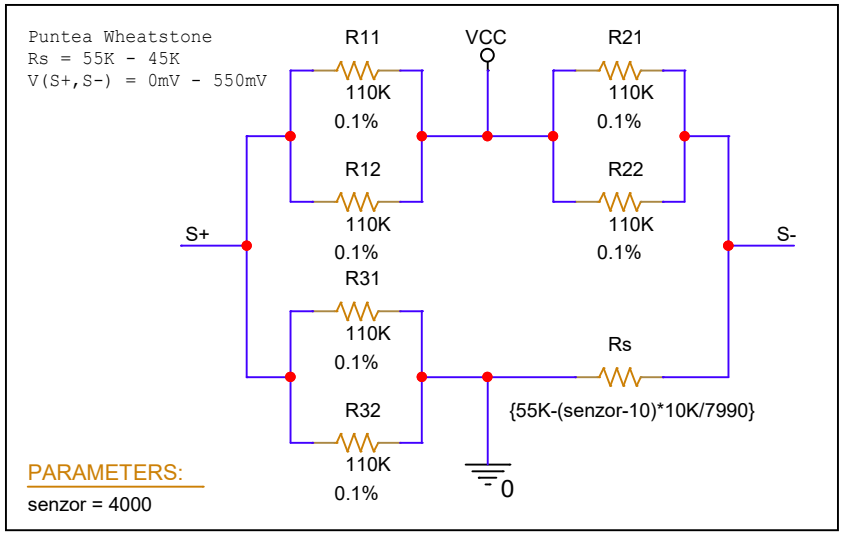


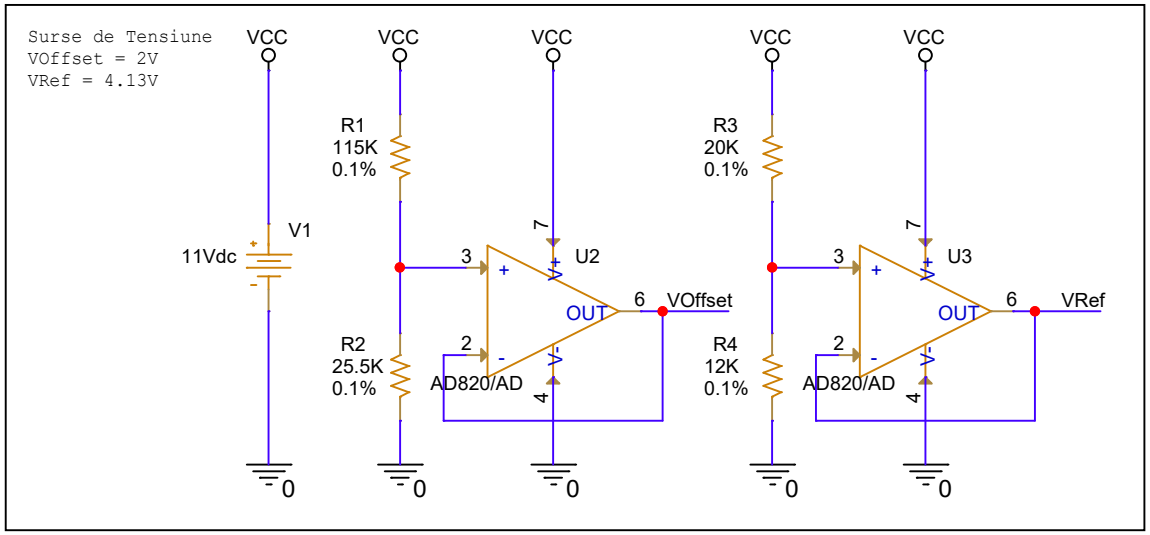


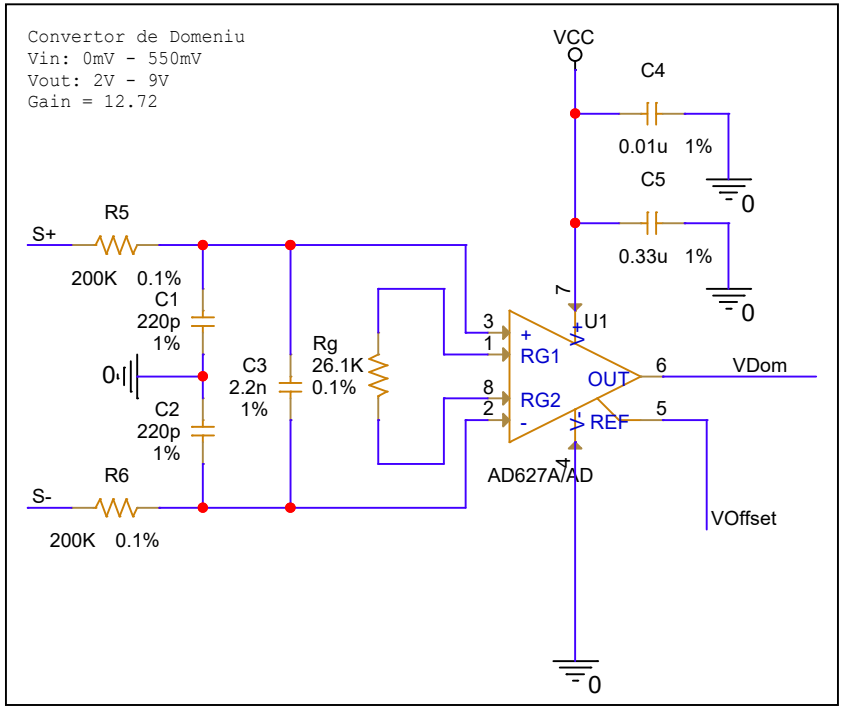


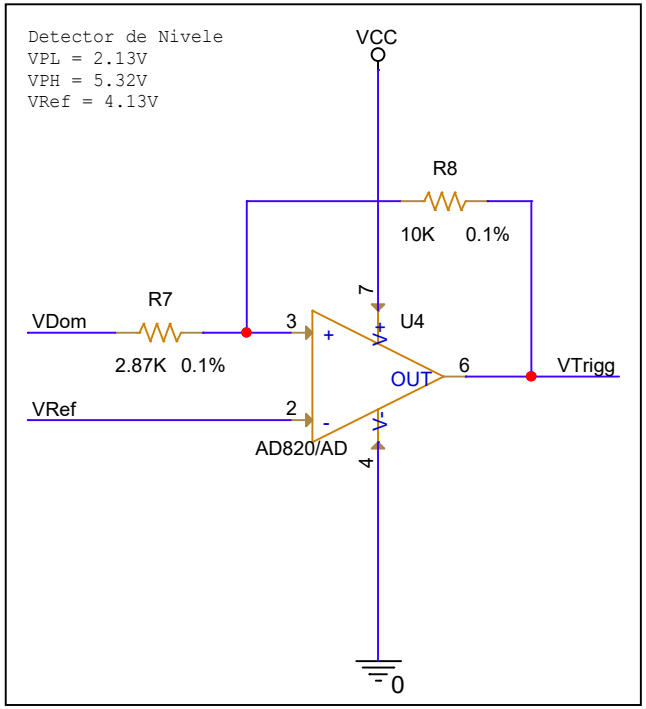


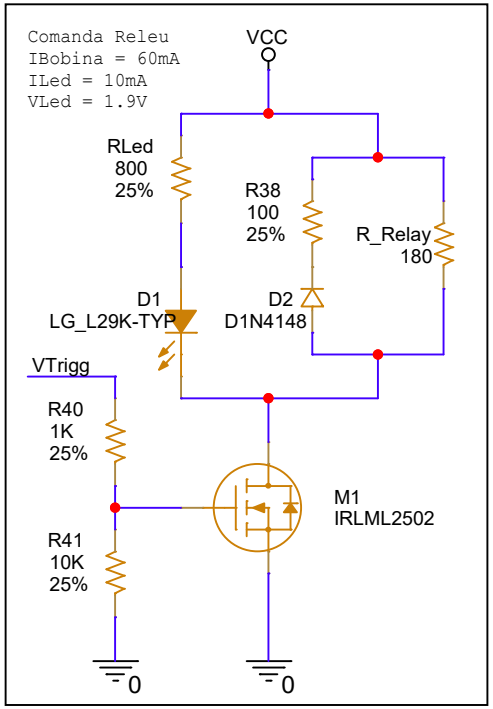


| | | |
|---|---|---|
| Title | Controlul Concentratiei de Monoxid de Carbon | |
| Size A | Document Number 1 | Rev 1 |
| Date: Friday, May 31, 2024 | Sheet 1 of 1 | |