Company name:	RBM Systems
Created by:	Owen Dayton
Phone:	
Email:	owen@rbmsystems.com.au
Date:	16/09/2024

Project:	Coles Boorooma	**Client:**	
Reference Number:	SM-CHWP-L5-1 (13.2L/s @ 360kPa)	**Client Number:**	
		Contact:	

Qty.	Description
1	**NBG 65-50-160/177 AAFE2SESBQQENW1**

Note! Product picture may differ from actual product

Product No.: 99801083

Non-self-priming, single-stage, centrifugal volute pump designed according to ISO 5199 with dimensions and rated performance according to ISO 2858 (16 bar). Flanges are PN 16 with dimensions according to AS2129 table E. The pump has an axial suction port, radial discharge port, horizontal shaft and a back pull-out design enabling removal of the motor, motor stool, cover and impeller without disturbing the pump housing or pipework.

The unbalanced rubber bellows seal is according to DIN EN 12756.
The pump is close-coupled to a fan-cooled asynchronous motor.

Controls:

Frequency converter:	None
Pressure sensor:	N

Liquid:

Pumped liquid:	Water
Liquid temperature range:	-25 .. 120 °C
Selected liquid temperature:	20 °C
Density:	998.2 kg/m³

Technical:

Pump speed on which pump data are based:	2945 rpm
Actual calculated flow:	13.2 l/s
Resulting head of the pump:	360 kPa
Actual impeller diameter:	177 mm
Nominal impeller diameter:	160
Type of impeller:	Standard
Shaft seal arrangement:	Single
Code for shaft seal:	BQQE
Curve tolerance:	ISO9906:2012 3B
Bearing design:	Standard
MaxPowerP2AlongTheCurve:	8.159 kW

Materials:

Pump housing:	Cast iron EN-GJL-250 ASTM class 35
Wear ring:	Bronze
Impeller:	Stainless steel EN 1.4408 ASTM CF8M
Internal pump house coating:	CED
Shaft:	Stainless steel EN 1.4401

Company name:	RBM Systems
Created by:	Owen Dayton
Phone:	
Email:	owen@rbmsystems.com.au
Date:	16/09/2024

Project:	Coles Boorooma	**Client:**	
Reference Number:	SM-CHWP-L5-1 (13.2L/s @ 360kPa)	**Client Number:**	
		Contact:	

Qty.	Description	
1		AISI 316
	Installation:	
	Maximum ambient temperature:	40 °C
	Maximum operating pressure:	16 bar
	Pipe connection standard:	AS2129 table E
	Size of inlet connection:	DN 65
	Size of outlet connection:	DN 50
	Pressure rating for connection:	PN 16
	Bearing lubrication:	Grease
	Pump housing with feet:	Yes
	Support block (Yes/No):	N
	Electrical data:	
	Motor type:	WEG
	Rated power - P2:	11 kW
	Mains frequency:	50 Hz
	Rated voltage:	3 x 380-415 V
	Rated current:	21.5-20.4 A
	Starting current:	860 %
	Cos phi - power factor:	0.85-0.81
	Rated speed:	2955 rpm
	IE efficiency:	IE391.5%
	IE Efficiency class:	IE3
	Motor efficiency at full load:	91.5 %
	Motor efficiency at 3/4 load:	91.5 %
	Number of poles:	2
	Enclosure class (IEC 34-5):	IP55
	Insulation class (IEC 85):	F
	Motor No:	99174338
	Others:	
	Minimum efficiency index, MEI ≥:	0.70
	Net weight:	143 kg
	Gross weight:	164 kg
	Shipping volume:	0.509 m³
	Country of origin:	AU
	Custom tariff no.:	8413709062
	Language on pump nameplate:	GB

Company name:	RBM Systems
Created by:	Owen Dayton
Phone:	
Email:	owen@rbmsystems.com.au
Date:	16/09/2024

Project:	Coles Boorooma	**Client:**	
Reference Number:	SM-CHWP-L5-1 (13.2L/s @ 360kPa)	**Client Number:**	
		Contact:	

99801083 NBG 65-50-160/177 AAFE2SESBQQENW1 50 Hz

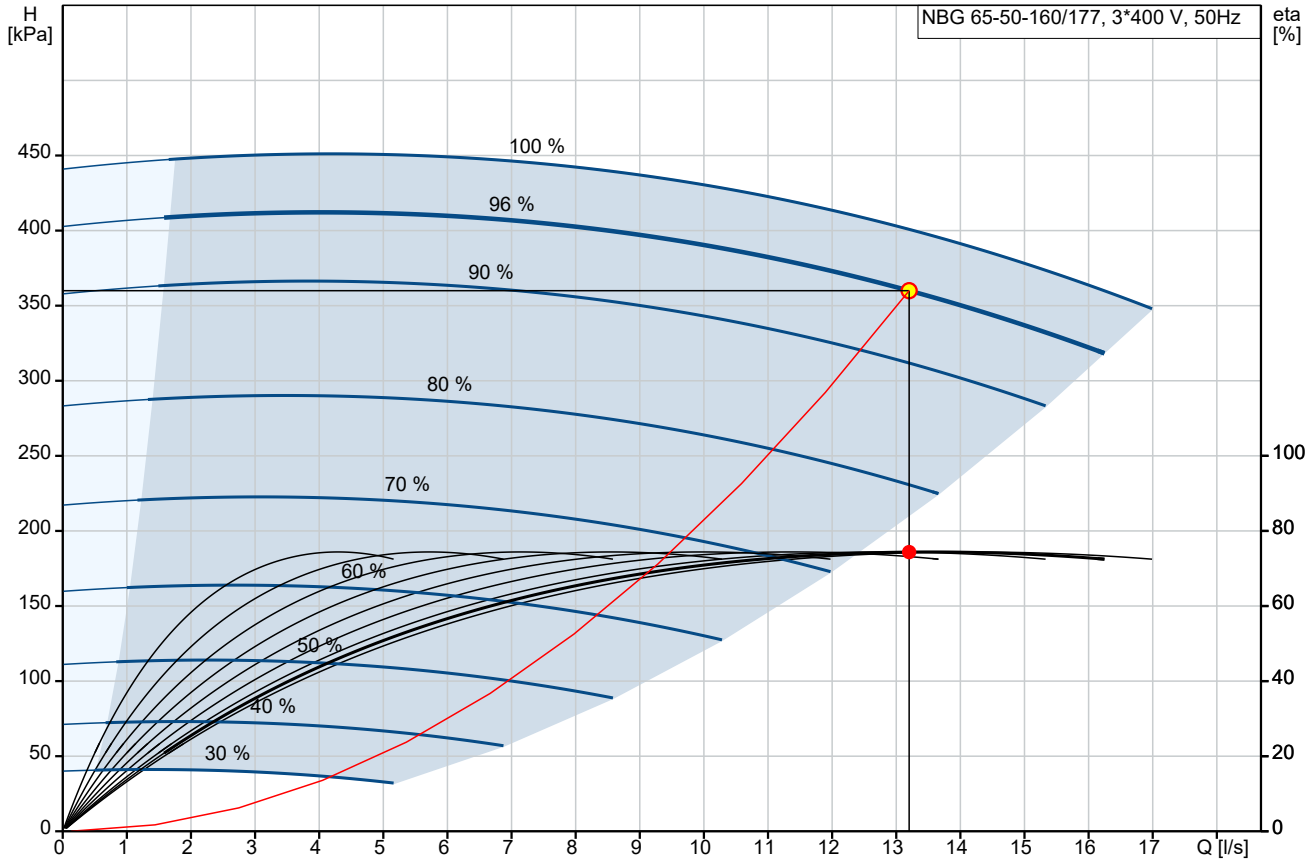

Q = 13.2 l/s
n = 96 % (47.8Hz)
Liquid temperature during operation = 20 °C
Eta pump = 74.4 %

H = 360 kPa
Pumped liquid = Water
Density = 998.2 kg/m³

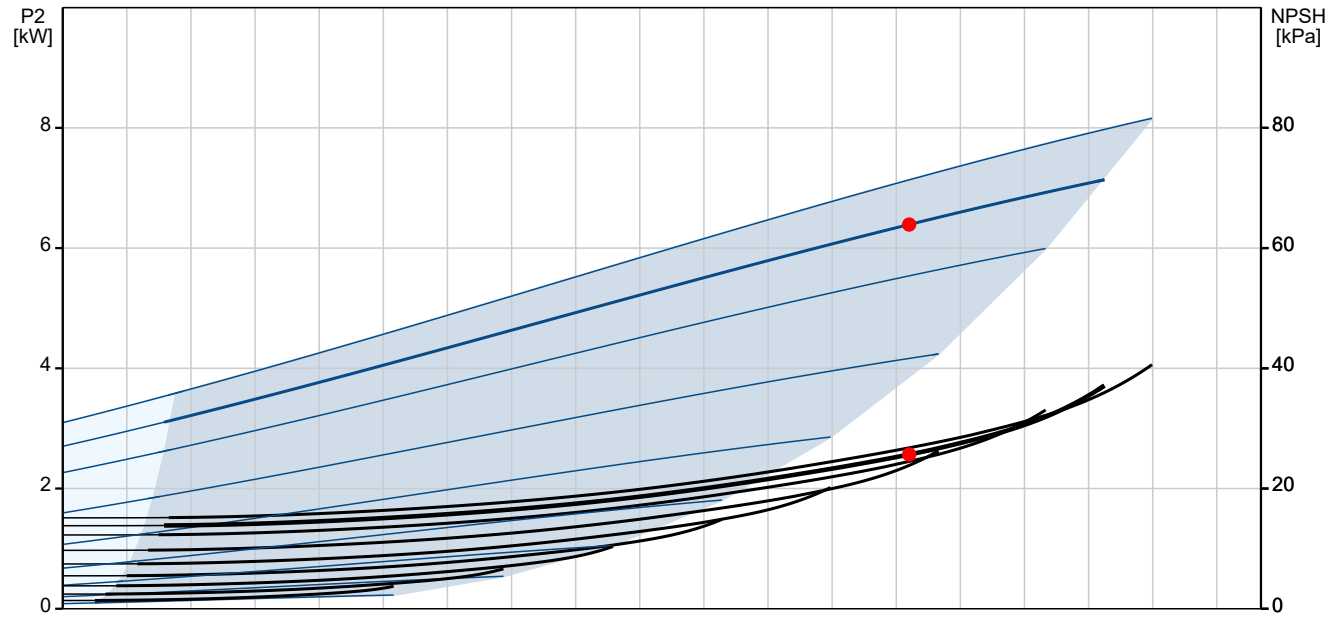

P2 = 6.392 kW
NPSH = 25.66 kPa

Company name:	RBM Systems
Created by:	Owen Dayton
Phone:	
Email:	owen@rbmsystems.com.au
Date:	16/09/2024

Project:	Coles Boorooma	**Client:**	
Reference Number:	SM-CHWP-L5-1 (13.2L/s @ 360kPa)	**Client Number:**	
		Contact:	

99801083 NBG 65-50-160/177 AAFE2SESBQQENW1 50 Hz

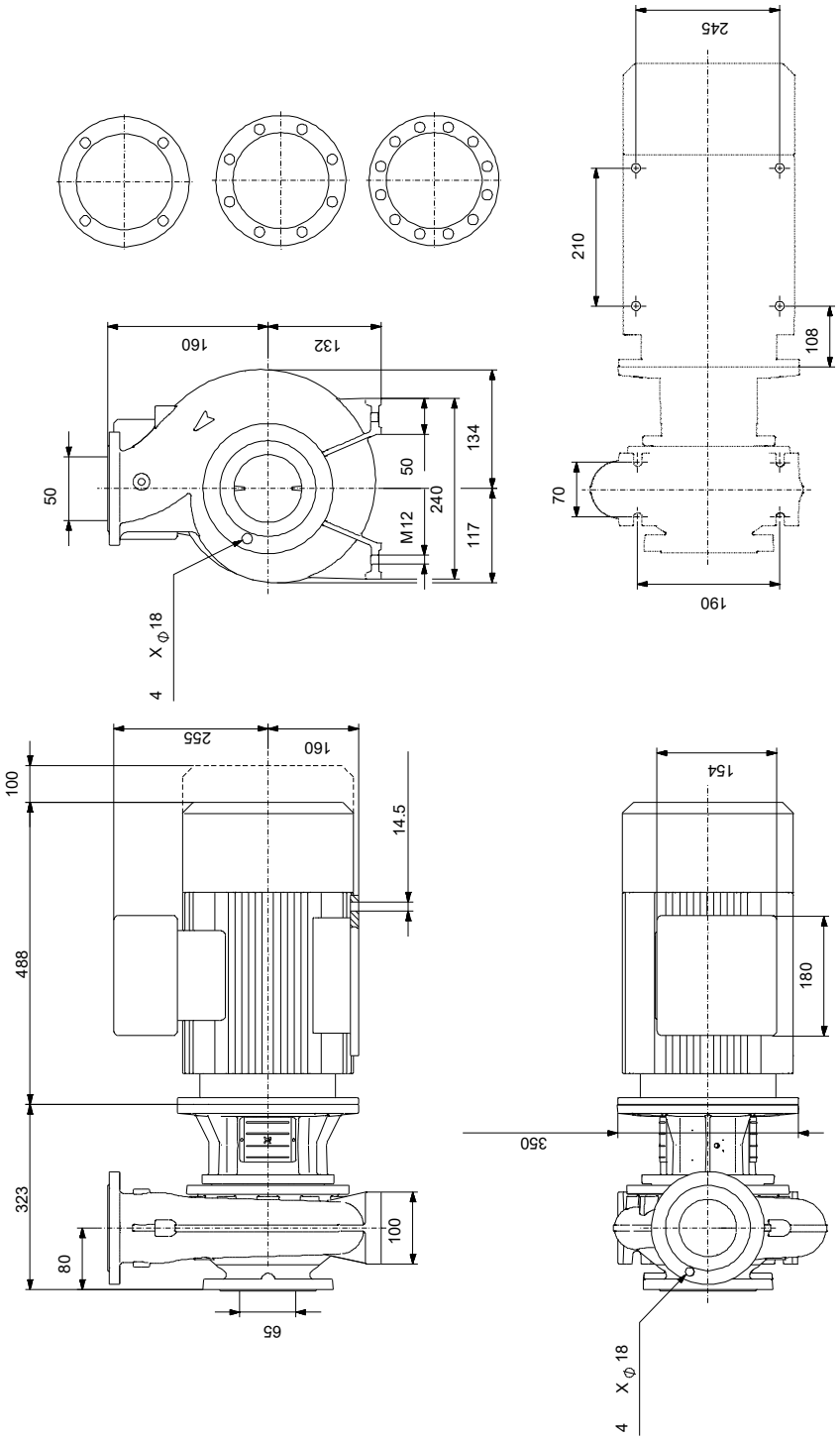

Note! All units are in [mm] unless others are stated.
Disclaimer: This simplified dimensional drawing does not show all details.