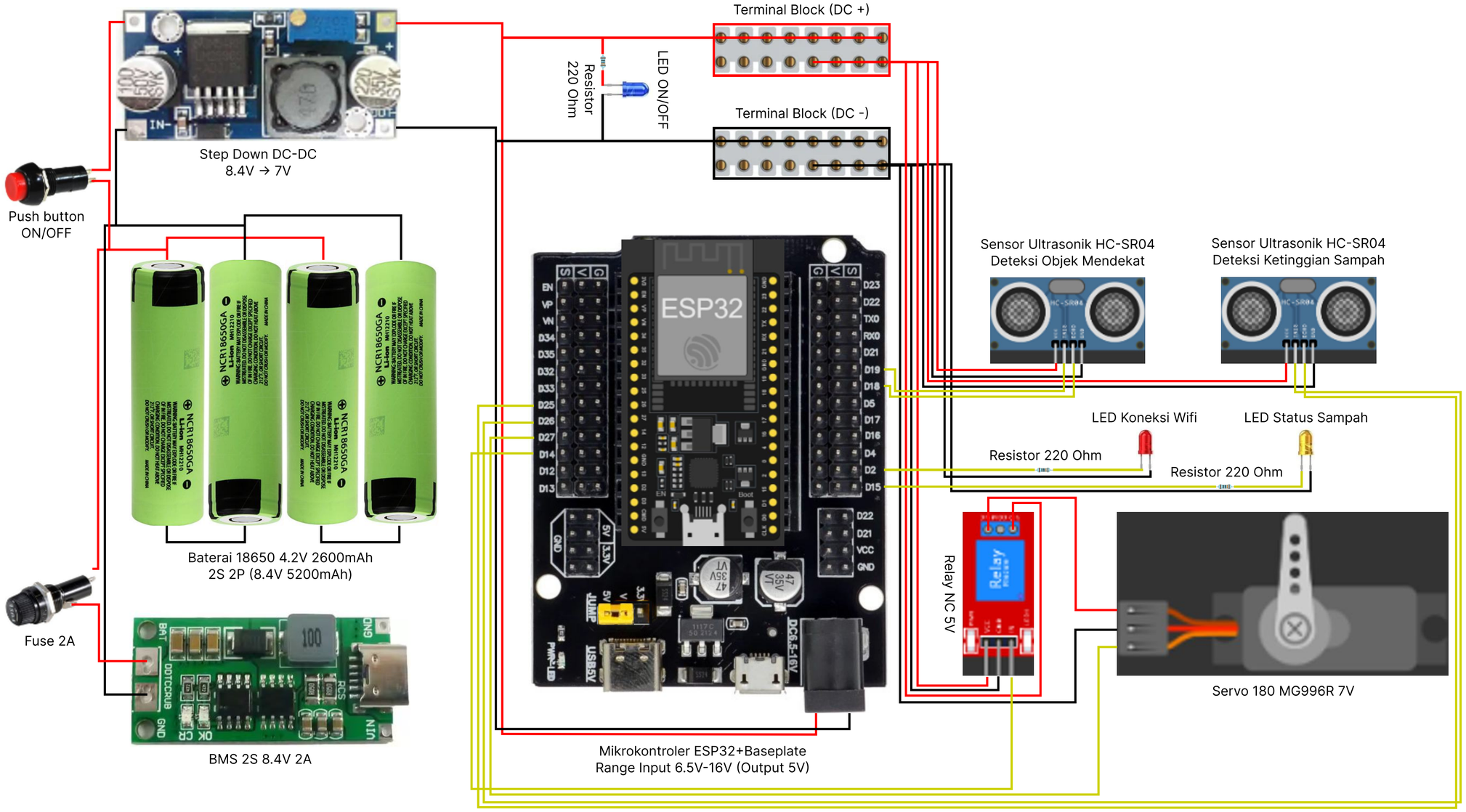

LEGEND

Mikrokontroler ESP32 + Baseplate

Baterai 18650

BMS 2S

Step Down DC-DC

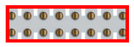
Terminal Blok DC+

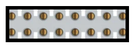
Terminal Blok DC-

LED 5mm

Push button ON/OFF

Fuse

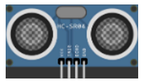
Sensor Ultrasonik HC-SR04

Relay NC 1 Channel

Servo 180 MG996R 7V

Kabel Positif (+)

Kabel Negatif (-)

Kabel Data (S)

PROJECT TITLE:	TITLE:	PREPARED BY:	IN COLLABORATION WITH:	DOCUMENT STATUS:	APPROVED TTD:
PKM-KC PENDANAAN ROBOBIN	WIRING DIAGRAM	ROBOBIN TEAM - UNDIKSHA	KEMENDIKBUDRISTEK - PKM - SIMBELMAWA	☑ APPROVED ☐ NOT APPROVED	I NYOMAN SAPUTRA WAHYU WIJAYA, S.Kom, M.Cs DOSEN PEMBIMBING UNDIKSHA