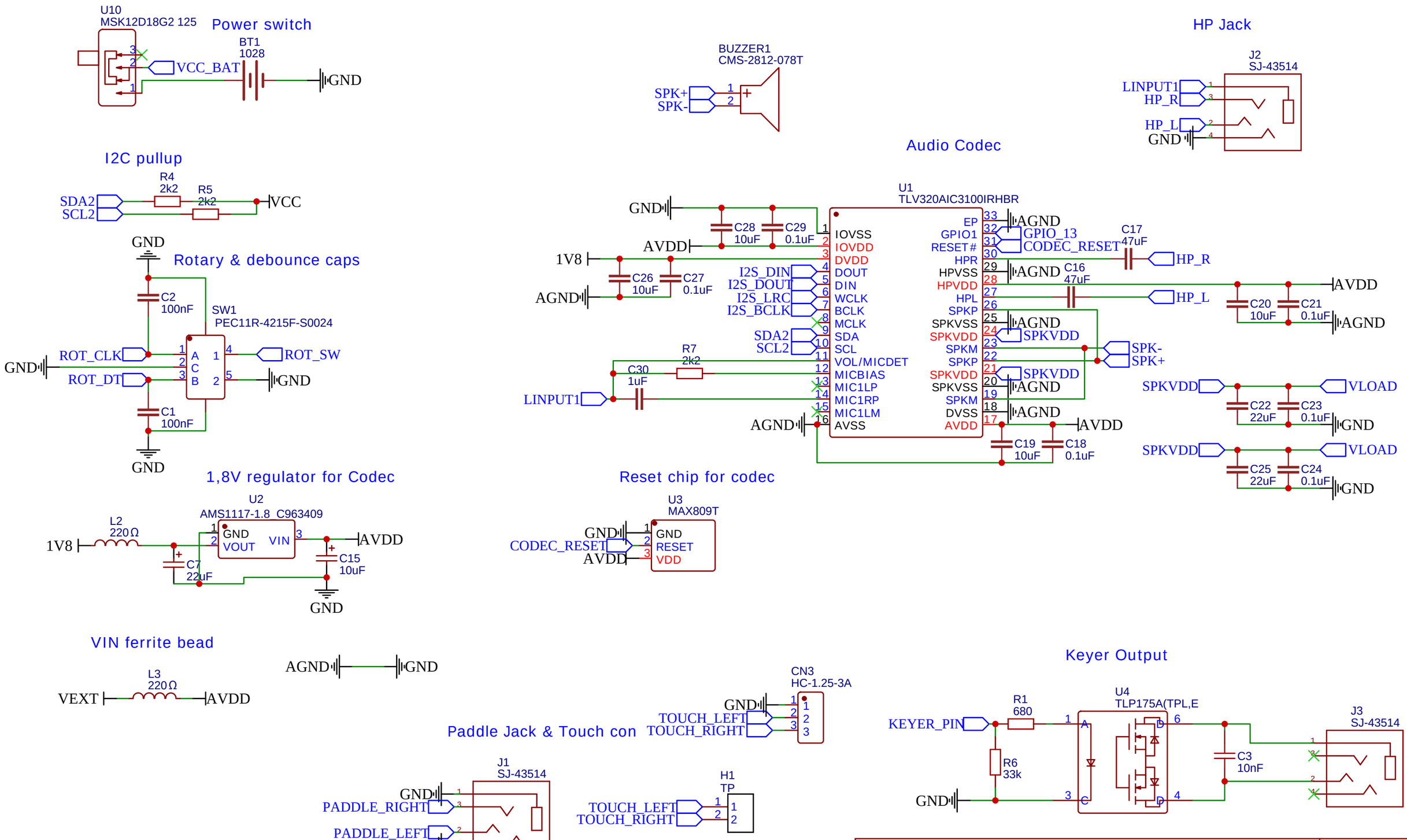

TITLE: M32 Pocket wroom TI31xx

REV: 4.3

Company: vt100 digital solutions

Sheet: 1/2

Date: 2025-04-25

Drawn By: OE6HKE

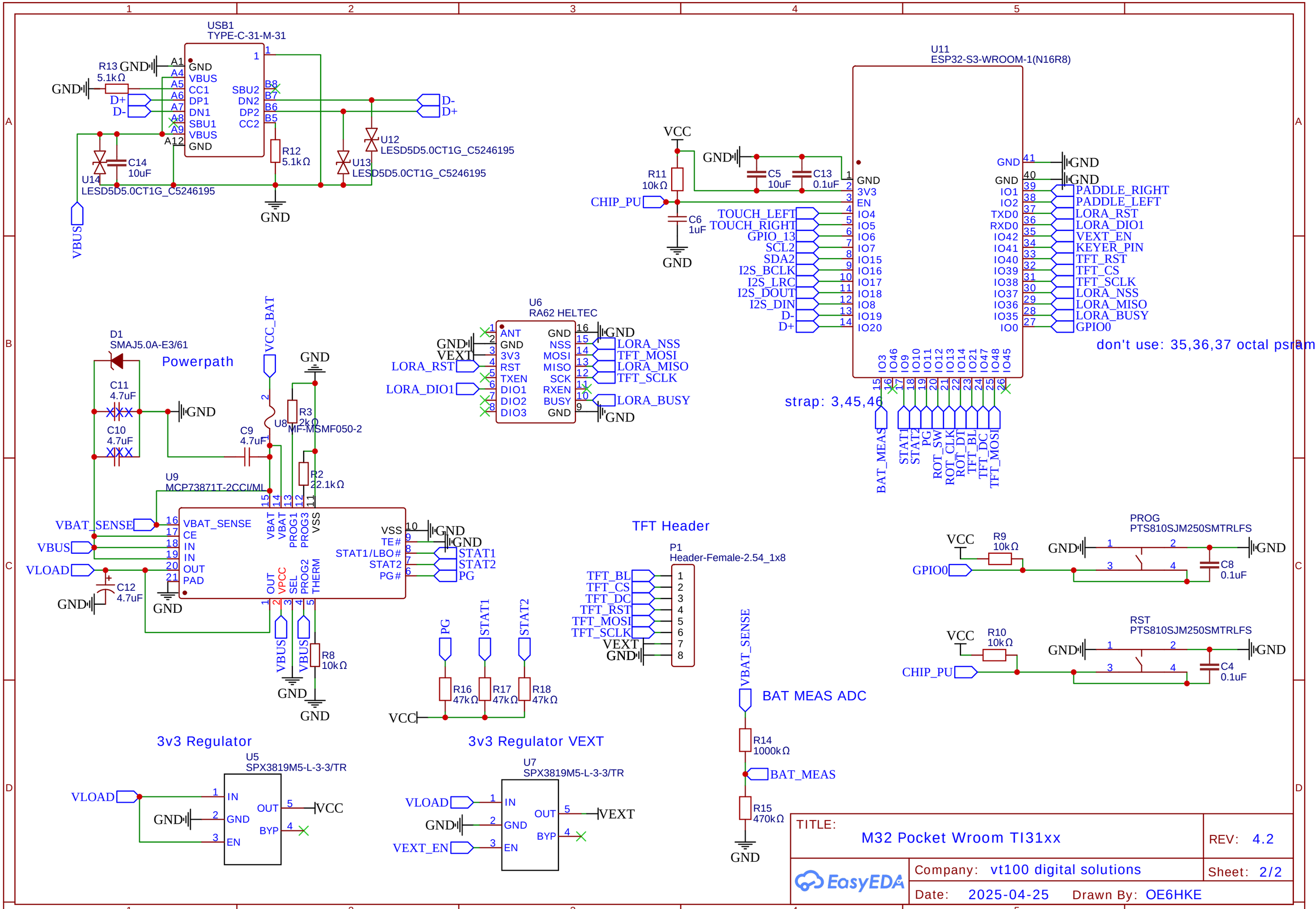

TITLE: M32 Pocket Wroom TI31xx	REV: 4.2
Company: vt100 digital solutions	Sheet: 2/2
Date: 2025-04-25 Drawn By: OE6HKE	