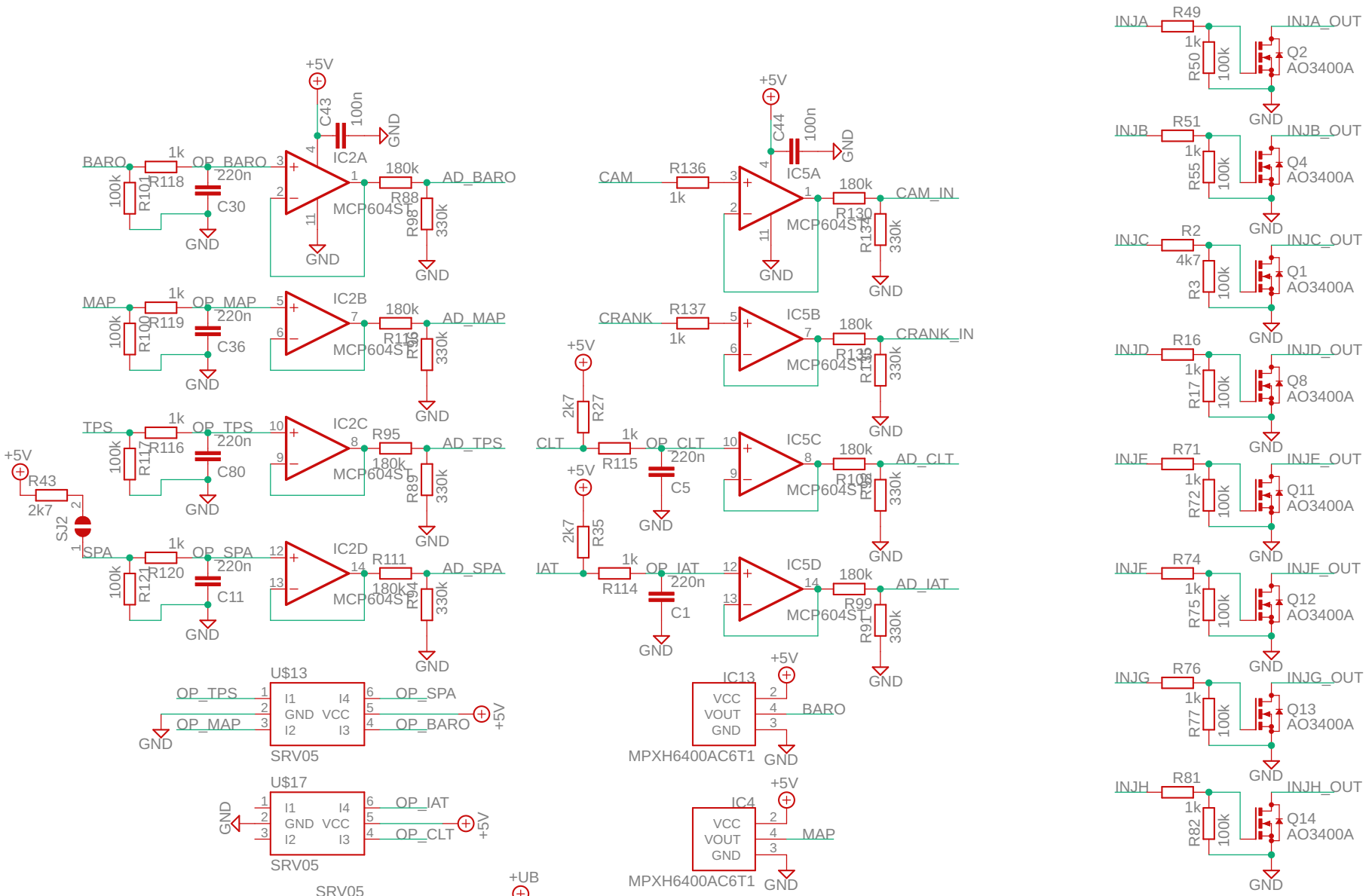

OELPRINZ.ORG	
gewitterbox	
16.11.22 09:38	
Sheet: 1/1	

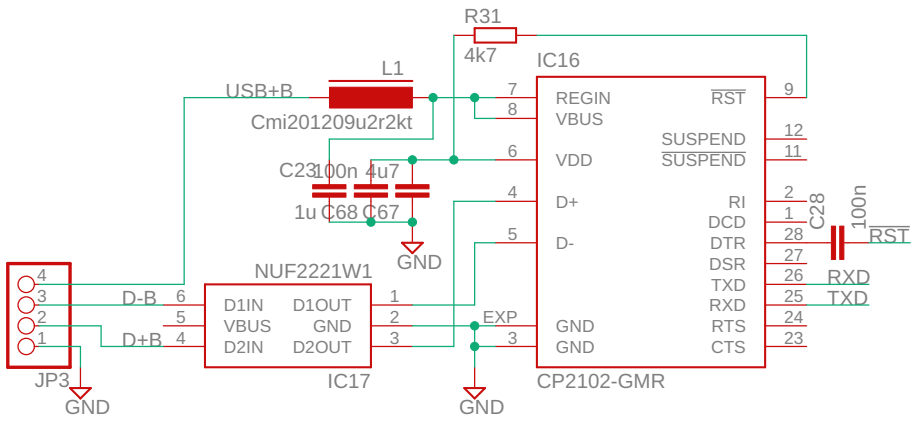

OELPRINZ.ORG

gewitterbox

16.11.22 09:38

Sheet: 1/1

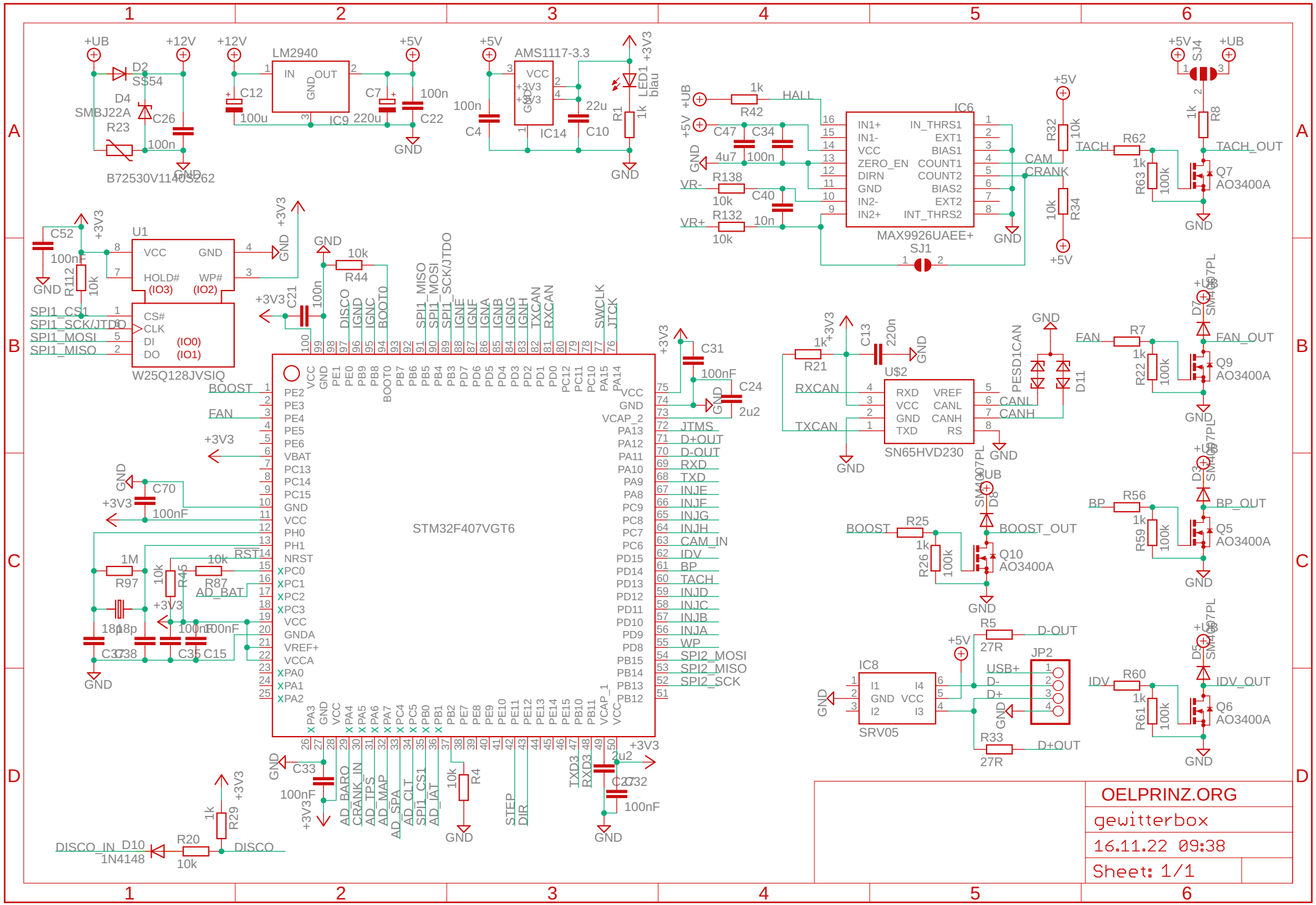
OELPRINZ.ORG
gewitterbox
16.11.22 09:38
Sheet: 1/1
STM32F407VGT6
W25Q128JVSIQ
MAX9926UAEE+
SN65HVD230
SRV05
LM2940
AMS1117-3.3
B72530V1140S262
SMBJ22A
1N4148
SM4007PL
AO3400A
PESD1CAN
LED1 blau
+UB
+12V
+5V
+3V3
GND
HALL
CAM
CRANK
TACH
TACH_OUT
FAN
FAN_OUT
BP
BP_OUT
BOOST
BOOST_OUT
IDV
IDV_OUT
D-OUT
D+OUT
RXCAN
TXCAN
CANL
CANH
DISCO
DISCO_IN
AD_BAT
RST
JTMS
D+OUT
D-OUT
RXD
TXD
INJE
INJF
INJG
INJH
CAM_IN
IDV
BP
TACH
INJD
INJC
INJB
INJA
WP
SPI2_MOSI
SPI2_MISO
SPI2_SCK
SPI1_CS1
SPI1_SCK/JTDO
SPI1_MOSI
SPI1_MISO
SWCLK
JTCK
AD_BARO
CRANK_IN
AD_TPS
AD_MAP
AD_SPA
AD_CLT
SPI1_CS1
AD_IAT
STEP
DIR
TXD3
RXD3

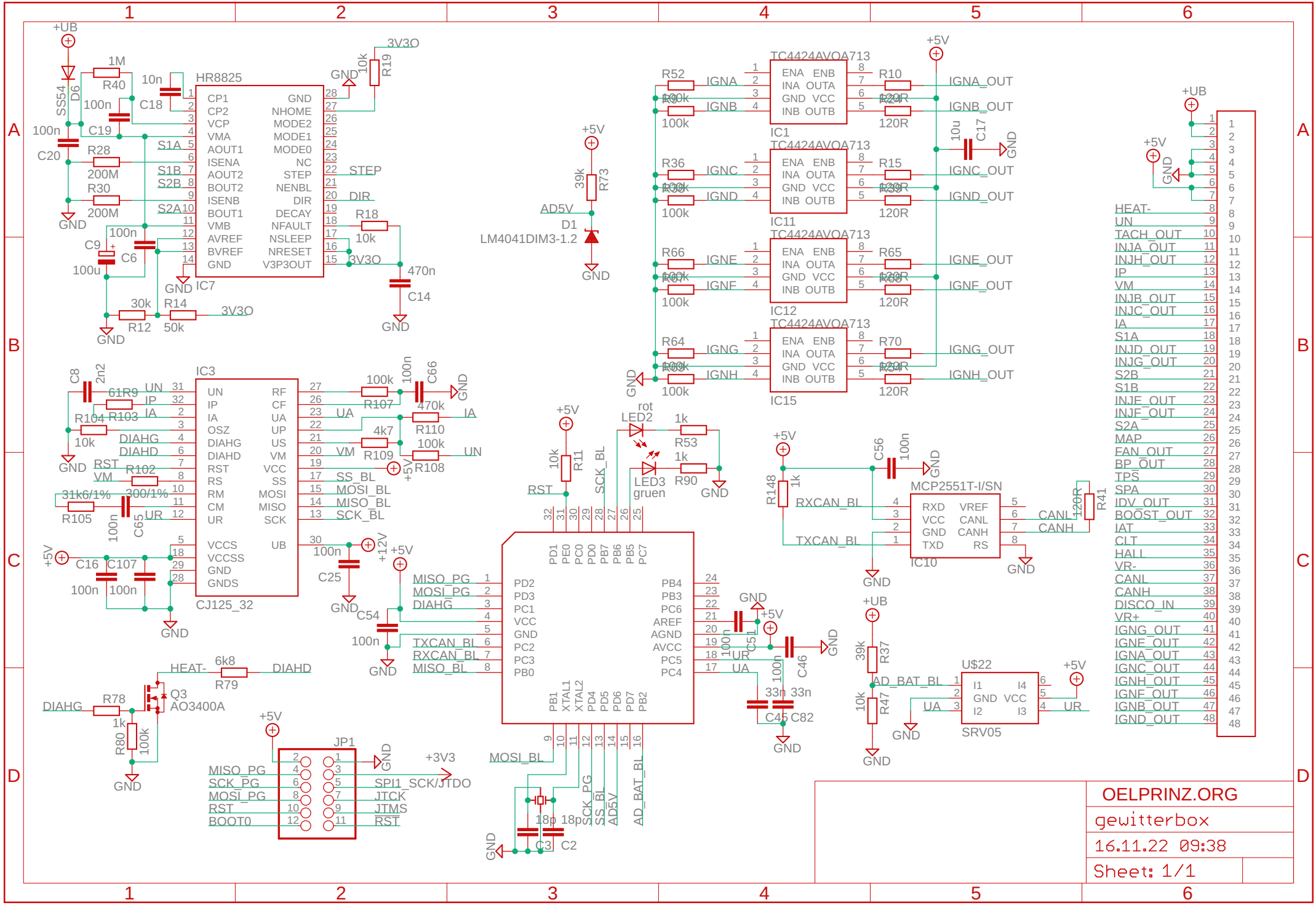
HR8825
IC7
CJ125_32
IC3
TC4424AVOA713
IC1
IC11
IC12
IC15
LM4041DIM3-1.2
D1
MCP2551T-I/SN
IC10
SRV05
U$22
JP1
Q3
AO3400A
OELPRINZ.ORG
gewitterbox
16.11.22 09:38
Sheet: 1/1