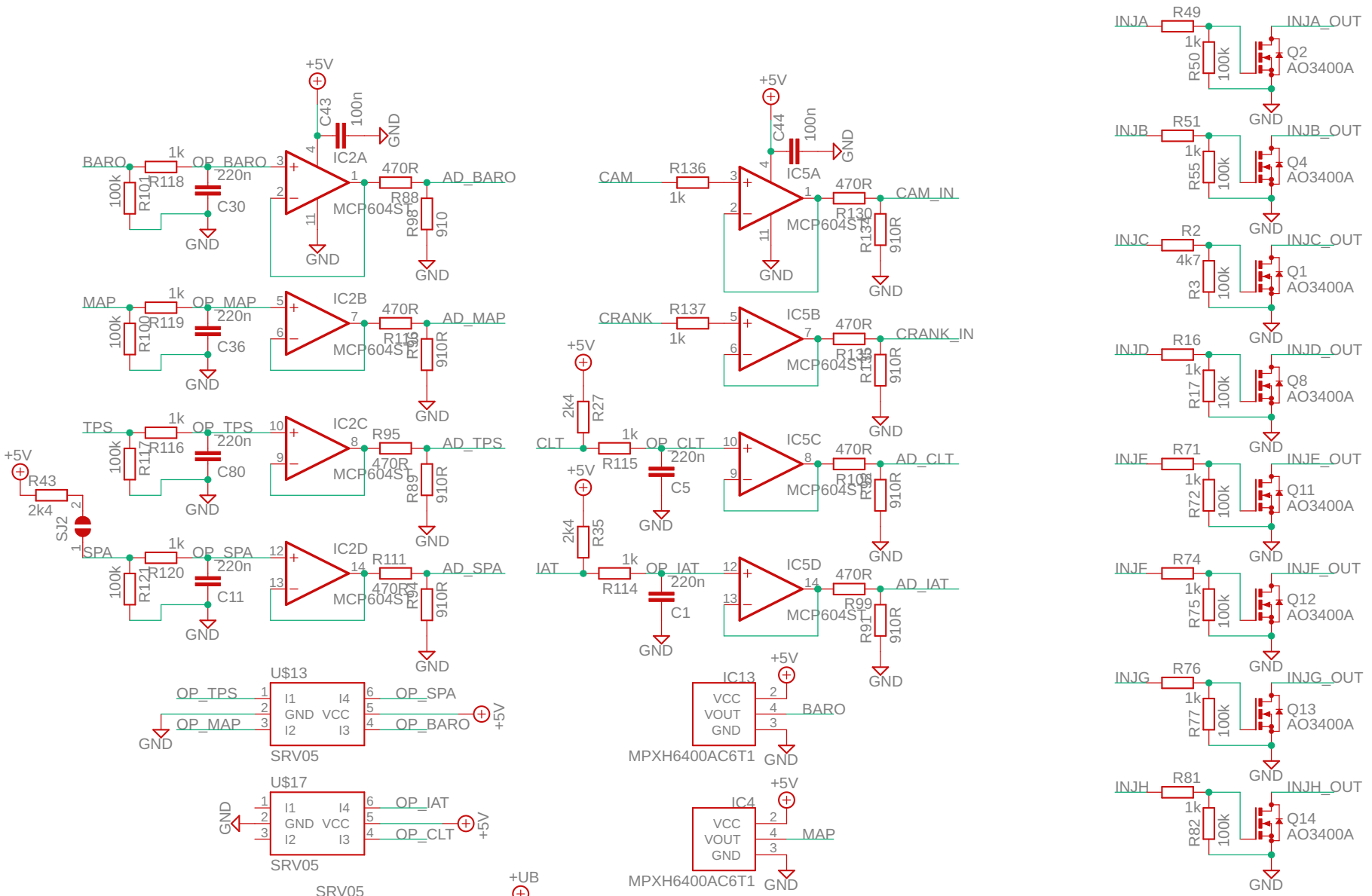

OELPRINZ.ORG

gewitterbox

28.11.22 15:10

Sheet: 1/1

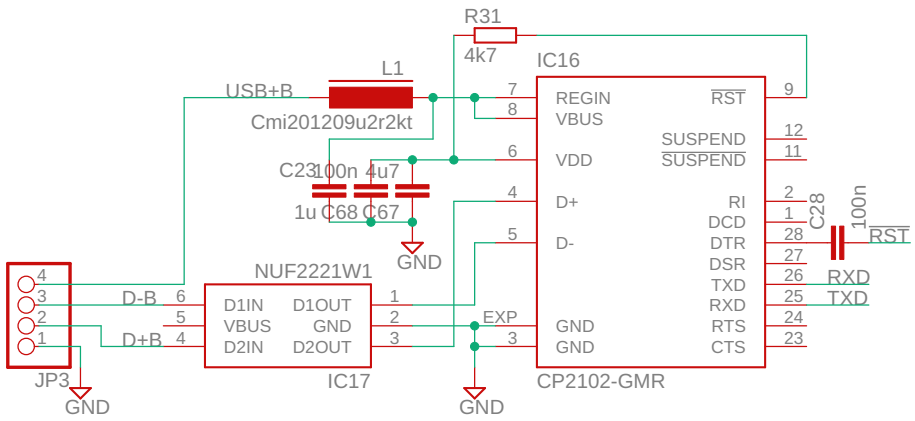

OELPRINZ.ORG

gewitterbox

28.11.22 15:10

Sheet: 1/1

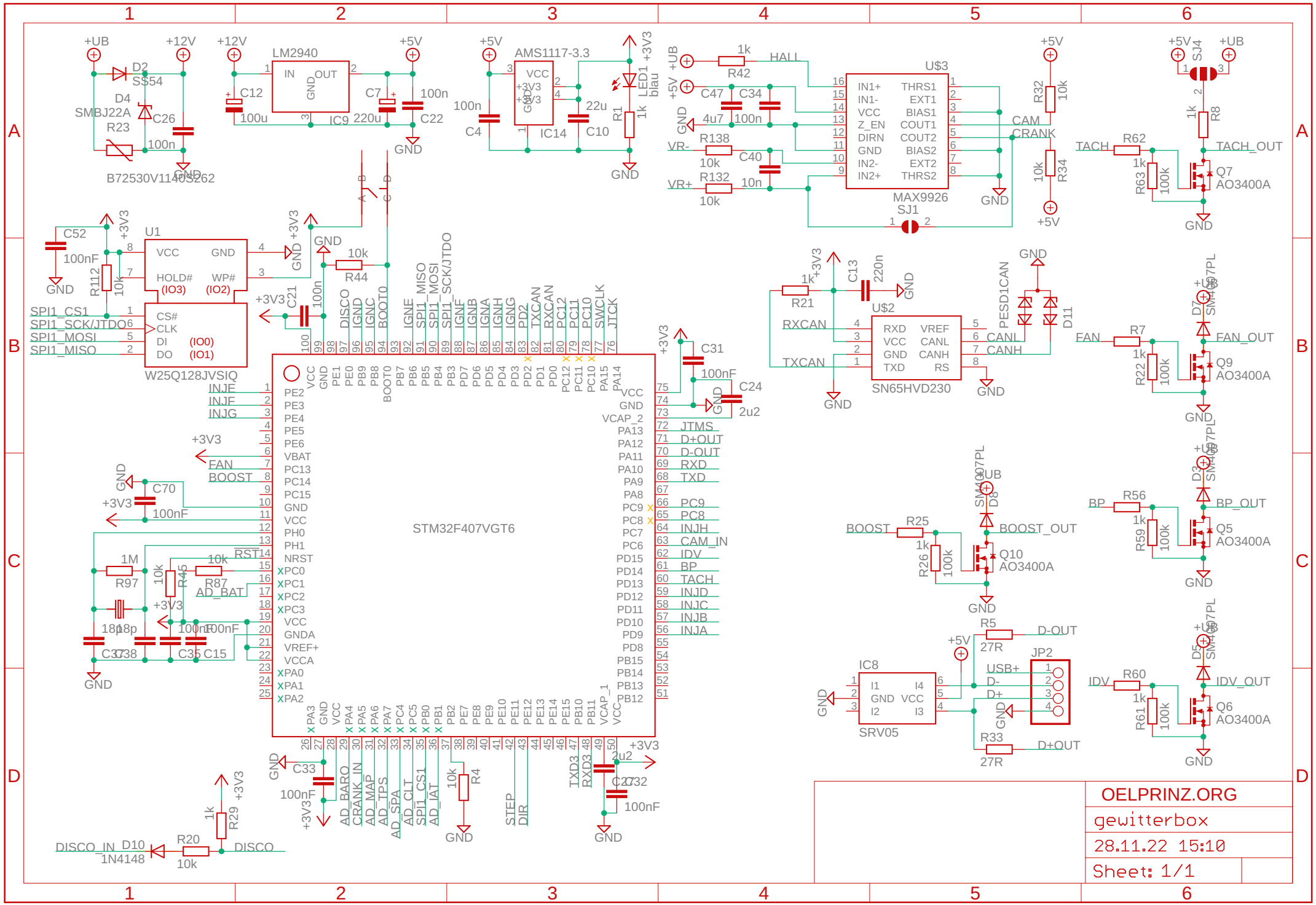
OELPRINZ.ORG
gewitterbox
28.11.22 15:10
Sheet: 1/1
STM32F407VGT6
W25Q128JVSIQ
MAX9926
SN65HVD230
AMS1117-3.3
LM2940
SRV05
B72530V1140S262
SMBJ22A
1N4148
SM4007PL
AO3400A
PESD1CAN
LED1 blau
JP2
SJ1
SJ4

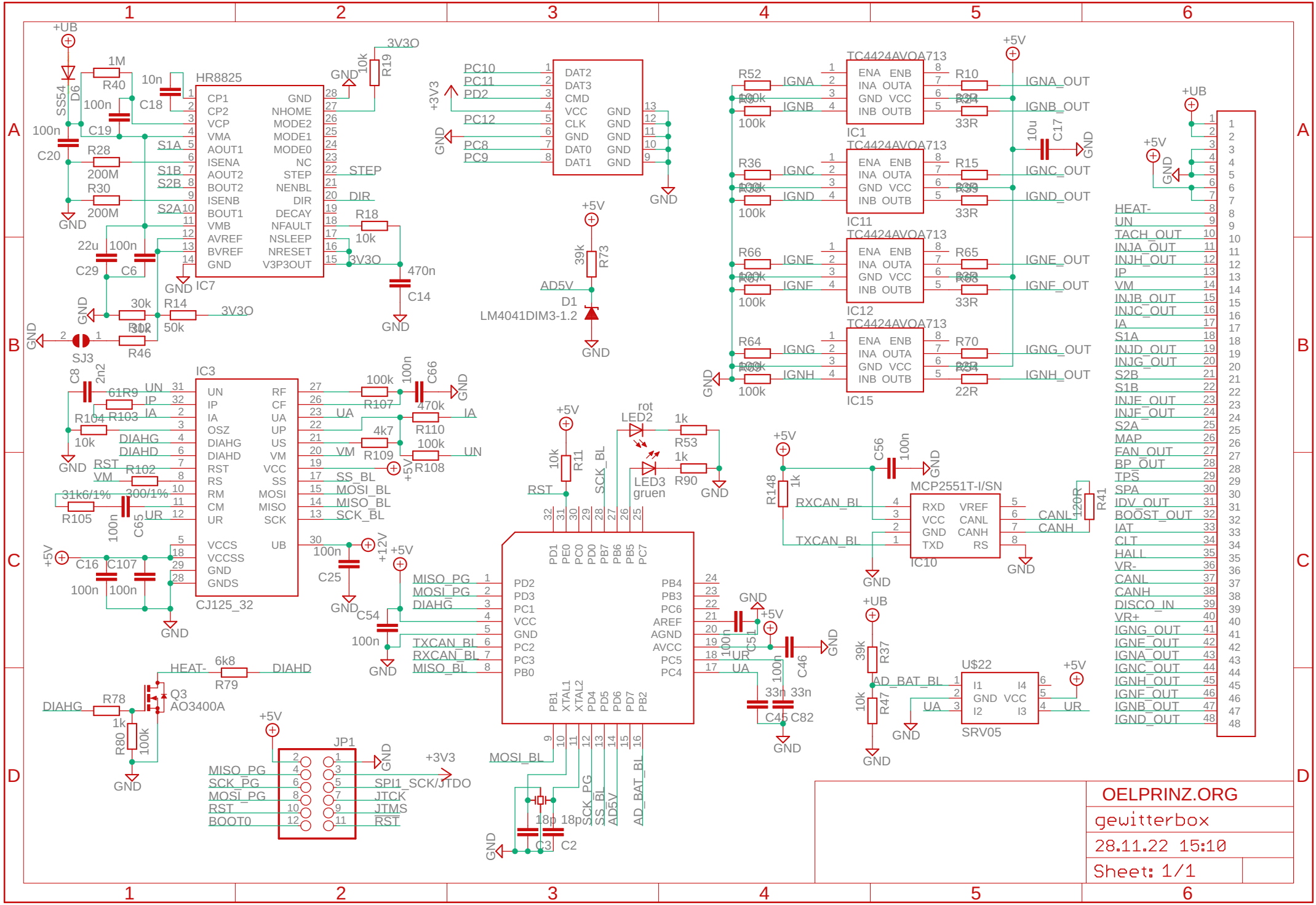
HR8825
IC7
CP1 CP2 VCP VMA AOUT1 ISENA AOUT2 BOUT2 ISENB BOUT1 VMB AVREF BVREF GND
GND NHOME MODE2 MODE1 MODE0 NC STEP NENBL DIR DECAY NFAULT NSLEEP NRESET V3P3OUT
S1A S1B S2B S2A
STEP
DIR
3V3O
IC3
CJ125_32
UN IP IA OSZ DIAHG DIAHD RST RS RM CM UR VCCS VCCSS GND GNDS
RF CF UA UP US VM VCC SS MOSI MISO SCK UB
MISO_PG MOSI_PG DIAHG TXCAN_BL RXCAN_BL MISO_BL
SS_BL MOSI_BL MISO_BL SCK_BL
JP1
MISO_PG SCK_PG MOSI_PG RST BOOT0
SPI1_SCK/JTDO JTCK JTMS RST
Q3 AO3400A
HEAT-
DIAHD
DIAHG
DAT2 DAT3 CMD VCC CLK GND DAT0 DAT1
PC10 PC11 PD2 PC12 PC8 PC9
LM4041DIM3-1.2
AD5V
TC4424AVOA713
IC1 IC11 IC12 IC15
ENA ENB INA OUTA GND VCC INB OUTB
IGNA IGNB IGNC IGND IGNE IGNF IGNG IGNH
IGNA_OUT IGNB_OUT IGNC_OUT IGND_OUT IGNE_OUT IGNF_OUT IGNG_OUT IGNH_OUT
MCP2551T-I/SN
IC10
RXD VCC GND TXD VREF CANL CANH RS
RXCAN_BL TXCAN_BL
CANL CANH
SRV05
U$22
I1 GND I2 I4 VCC I3
AD_BAT_BL
HEAT- UN TACH_OUT INJA_OUT INJH_OUT IP VM INJB_OUT INJC_OUT IA S1A INJD_OUT INJG_OUT S2B S1B INJF_OUT INJF_OUT S2A MAP FAN_OUT BP_OUT TPS SPA IDV_OUT BOOST_OUT IAT CLT HALL VR- CANL CANH DISCO_IN VR+ IGNG_OUT IGNF_OUT IGNA_OUT IGNC_OUT IGNH_OUT IGNF_OUT IGNB_OUT IGND_OUT
OELPRINZ.ORG
gewitterbox
28.11.22 15:10
Sheet: 1/1