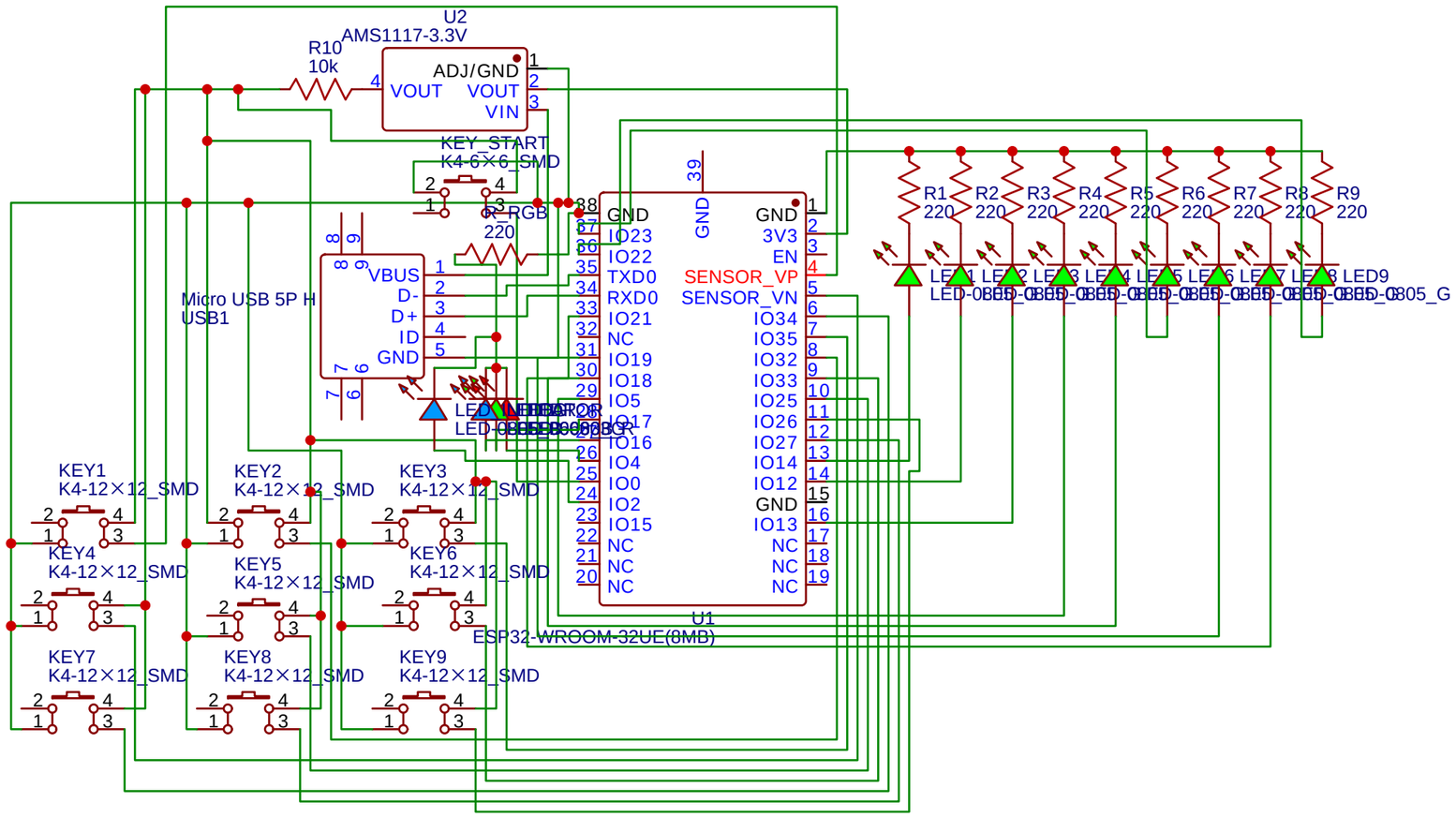

TITLE: Sheet_1	REV: 1.0
Company: Your Company	Sheet: 1/1
Date: 2025-09-12 Drawn By: ofer.afik123	