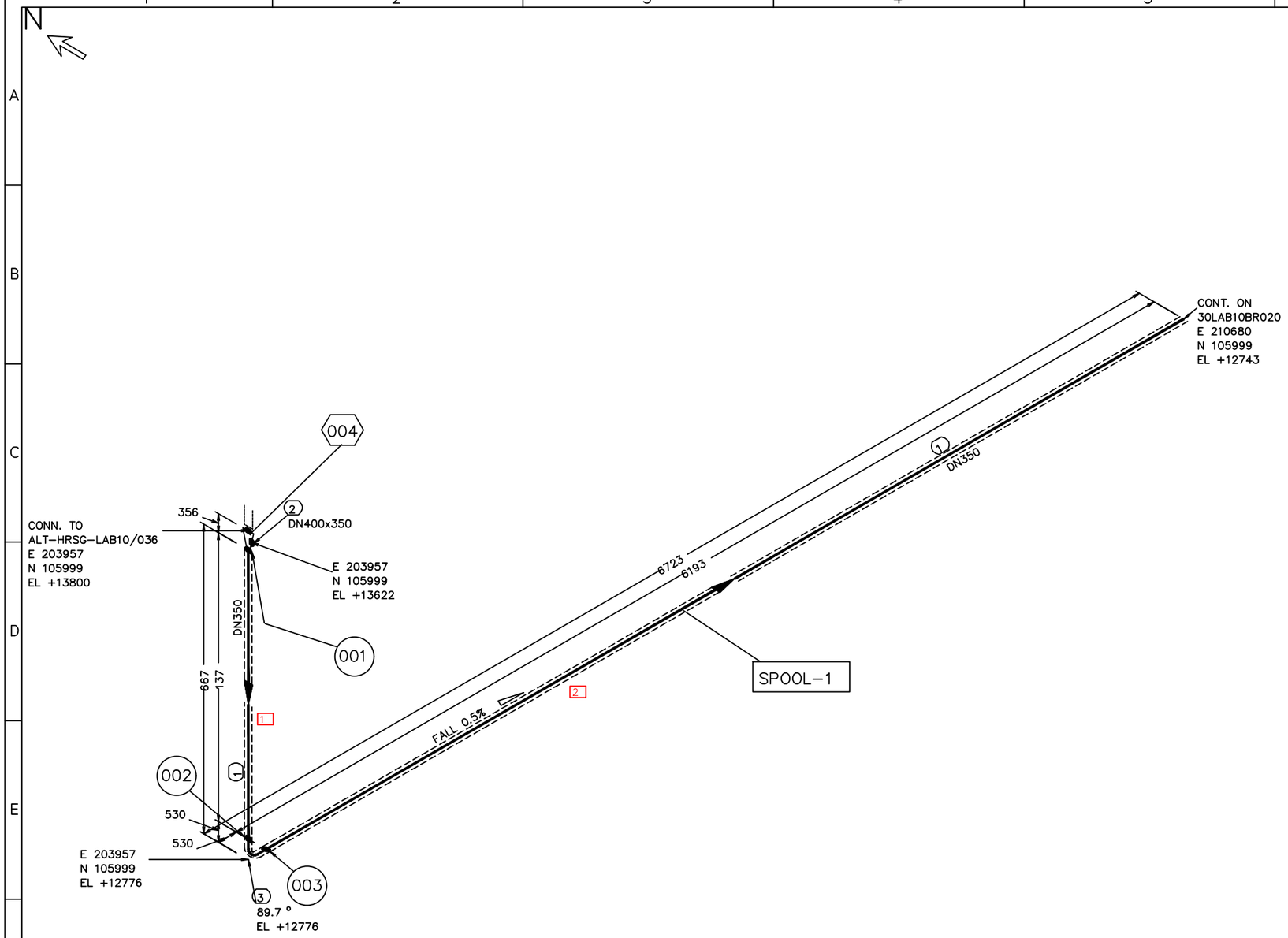

FABRICATION MATERIALS

PT NO	COMPONENT DESCRIPTION	N.S. (MM)	THICK 1 (MM)	THICK 2 (MM)	INSU. THCK.	QTY	WEIGHT (KG.)
	PIPE						
1	PIPE EN 10220 BE EN 10216-2 CS, P235GH (1.0345) - TC 2 (OPT. 3/6/8)	350	12.5mm		90mm	6.4M	670.98
	FITTINGS						
2	CONCENTRIC REDUCER TYPE B BW EN 10253-2 SEAMLESS CS, P235GH (1.0345) - TC 2 (OPT. 3/6/8)	400 x 350	14.2mm	12.5mm	90mm	1	45.70
3	90 ELBOW 3D TYPE B BW EN 10253-2 SEAMLESS CS, P235GH (1.0345) - TC 2 (OPT. 3/6/8)	350	12.5mm		90mm	1	89.00

TOTAL FABRICATION WEIGHT 805.68

PIPE KKS	30LAB10BR010	TEMPERATURE (C)		PED CATEGORY		G2-III	
SPECIFICATION	E63C1	OPERATION	DESIGN	NDTs			
P&ID	ALT-SNRPTE-PID-0052	186		CIRCUNFERENCIAL		BRANCH	
TRACING	-	PRESSURE (Barg)		SURFACE TESTING	VOLUMETRIC TESTING	SURFACE TESTING	VOLUMETRIC TESTING
INSU. TYPE	H	OPERATION	DESIGN	-	-	-	-
INSU. THICK.	90	18.26	53	PIPE CLEANING			

ENGINEERING DATA

- PIPING ERECTION SUBCONTRACTOR SHALL BE RESPONSIBLE TO VERIFY ALL DIMENSIONS FROM/TO EQUIPMENTS, NOZZLES AND TO PERFORM ALL REQUIRED ADJUSTMENTS.
- ALL VALVES AND SPECIAL ELEMENTS DIMENSIONS MUST BE CHECKED.
- THE ADJUSTMENT SPOOL WITH FIELD WELDING WILL HABE 150mm OF ADDITIONAL PIPE AND WILL BE DEFINED ~~BY THE PIPING ERECTION~~ SUBCONTRACTOR.
- THE SLOPES INDICATED ARE MINIMUM.
- FLANGES HOLE MUST BE OUT OF PRINCIPALS AXIS.
- ALL DIMENSIONS, ELEVATIONS AND COORDENATES ARE IN MILIMETERS UNLESS NOTED OTHERWISE.
- THERMOWELL ASSEMBLY ACCORDING TO DOCUMENT ALT-SNRICO-DBS0003
- GRADE ELEVATION +0.00m
- NDTs DETAILED SCOPE AS PER "ALT-SNRIPC-SPC-0002" WELDING TECHNICAL SPECIFICATION.

SHOP WELD	FIELD WELD	SCREWED JOINT	COMPR JOINT	SITE CONNECTION	PIPE SUPPORT	LAGGED PIPE	TRACED PIPE
					—		

NOTES

REV.	DESCRIPTION	DATE	DRAWN	CHECKED	APPROVED
1	FOR FABRICATION	25/10/24	CCP	ESG	CEV
0	FOR FABRICATION	15/04/24	CCP	ESG	CEV

REVISIONS

Customer: EnBW Energie Baden-Württemberg AG

EnBW – Zeichnungs-Nr.

Ident.-Nr.

Project: ALTBACH HKW3

GE VERNOVA sener Bonatti

DRAWING TITLE: ISOMETRIC DRAWING 30LAB10BR010

+Z +Y +X

Planverfasser: Auftrags-Nr. – Dokumenten-Nr.

File Description: ALT-SNRTUB-DRW-0002.dwg

Document no. Supplier: ALT-SNRTUB-DRW-0002

Replacement for: Replaced by:

Format A2 Sheet 1 Of: 1

Diese Zeichnung und sämtliche Beilagen sind dem Empfänger nur zum vorgesehenen Zweck anvertraut.Gemäß DIN ISO 16016 werden EnBW alle Rechte vorbehalten, einschließlich des Eigentums an diesen Unterlagen
The information contained in this document is confidential and restricted, and is to be used only for the purposes established in the document. No modification, exploitation, reproduction, communication to any third party, dissemination or distribution of the whole or any part of the document is permitted without the prior written consent of SENER Ingeniería y Sistemas, S.A. Failure to respond to any request for such consent shall in no way be construed as authorization for use. © SENER Ingeniería y Sistemas, S.A. 7 Gatos, 2022